Manual of Water Supply Practices

M72

Knife Gate Valves

American Water Works Association

Documents
Document Sharing Hub

Full document details: AWWA Manual M72 2020

Manual of Water Supply Practices

M72

Knife Gate Valves

AWWA Reference Standard C520-19

American Water Works Association

Documents
Document Sharing Hub

Copyright © 2020 American Water Works Association. All Rights Reserved.

Full document details: AWWA Manual M72 2020

Manual of Water Supply Practices—M72

Knife Gate Valves

Copyright © 2020 American Water Works Association

All rights reserved. No part of this publication may be reproduced or transmitted in any form or by any means, electronic or mechanical, including scanning, recording, or any information or retrieval system. Reproduction and commercial use of this material is prohibited, except with written permission from the publisher.

Disclaimer
The authors, contributors, editors, and publisher do not assume responsibility for the validity of the content or any consequences of its use. In no event will AWWA be liable for direct, indirect, special, incidental, or consequential damages arising out of the use of information presented in this book. In particular, AWWA will not be responsible for any costs, including, but not limited to, those incurred as a result of lost revenue. In no event shall AWWA's liability exceed the amount paid for the purchase of this book.

If you find errors in this manual, please email books@awwa.org. Possible errata will be posted at www.awwa.org/M72.

Managing Editor/Project Manager: Melissa Valentine
Technical Editor: Dianne B. Rose
Cover Design: Mike Labruyere
Manager, Publishing Operations: Gillian Wink
Production: Innodata
Senior Specialist - Manuals: Willadee Hitchcock
Manuals Coordinator 2: Janet Greifinger

Library of Congress Cataloging-in-Publication Data

Names: MacConnell, Mark, author.
Title: M72 - knife gate valves / Mark MacConnell.
Other titles: Knife gate valves | AWWA manual ; M72.
Description: First edition. | Denver, CO : American Water Works Association, [2020] | Series: Manual of water supply practices ; M72 | Includes bibliographical references and index. | Summary: "This manual presents the general practice for selection and installation of manual and automated knife gate valves for use in water and waste-water applications. This document is intended to provide information and guidance on typical knife gate valves and their intended application"--Provided by publisher.
Identifiers: LCCN 2020045228 (print) | LCCN 2020045229 (ebook) | ISBN 9781647170271 (paperback) | ISBN 9781613005675 (ebook)
Subjects: LCSH: Water-pipes--Valves--Handbooks, manuals, etc.
Classification: LCC TD491 .M18 2020 (print) | LCC TD491 (ebook) | DDC 628.1/5--dc23
LC record available at https://lccn.loc.gov/2020045228
LC ebook record available at https://lccn.loc.gov/20200452299

Printed in the United States of America

ISBN 978-1-64717-027-1 eISBN 978-1-61300-567-5
DOI https://doi.org/10.12999/AWWA.M72ed1

All rights reserved. No part of this publication may be reproduced or transmitted in any form or by any means, electronic or mechanical, including scanning, recording, or any information or retrieval system. Reproduction and commercial use of this material is prohibited, except with written permission from the publisher. Please send any requests or questions to permissions@awwa.org.

American Water Works Association

American Water Works Association
6666 West Quincy Avenue
Denver, CO 80235-3098
awwa.org

Documents
Document Sharing Hub

Copyright © 2020 American Water Works Association. All Rights Reserved.

Full document details: AWWA Manual M72 2020

Contents

List of Figures, v

List of Tables, vii

Preface, ix

Committee Personnel, xi

Chapter 1 Introduction 1
History, 1
Purpose, 2
Body Style, 3

Chapter 2 Principles of Operation 9
Definitions, 9
Function, 11

Chapter 3 Types of Construction 13
General Construction, 13
Body Construction, 13
Gate Packing and Stem Seals, 14
Yokes, 16
Stem, 17
Gates, 17
Valve Seat Configurations, 17
Methods of Seating, 19
Metal-Seated, 20

Chapter 4 Optional Equipment 23
Manual Override, 23
Lockout Mechanism, 23
External Gate Guards, 25
Fail-Safe Operation, 26
Position Indication, 27
Chainwheels, 27
Flush Ports, 28

Chapter 5 Unloading, Inspection, and Storage 29
Unloading, 29
Inspection after Unloading, 29
Operation after Delivery, 30
Specifications, 30
Short- and Long-Term Storage, 30
Storage Location, 31
Storage Position, 31
Flange Covers, 32
Storage Inspection, 32

Documents
Document Sharing Hub
Copyright © 2020 American Water Works Association. All Rights Reserved.
Full document details: AWWA Manual M72 2020

Chapter 6 Installation and Testing 33
Installation Training, 34
Installation Orientations, 35
Preferred Direction of Flow, 37
Bolt Tightening, 38
Packing Adjustments, 38
Large Valves, 39
Valve Misapplication and Maintenance, 40
Witnessed Testing, 40
Piping Tests, 40
Field Commissioning – Dry, 41
Field Commissioning – Wet, 41

Chapter 7 Operation, Maintenance, and Safety 43
General, 43
Safety Concerns, 43
Maintenance Procedures, 44
Preventive Maintenance Schedules, 44
Recordkeeping, 44

Index, 45

List of AWWA Manuals, 49

Documents
Document Sharing Hub
Copyright © 2020 American Water Works Association. All Rights Reserved.
Full document details: AWWA Manual M72 2020

Figures

1-1 Typical bonnetless knife gate valve, 2
1-2 Typical bonnetless knife gate valve with drilled-through bolt pattern (left) and tab-less wafer body (right), 3
1-3 Semi-lug bonnetless knife gate valve with two-piece body and stanchions, 4
1-4 Typical bonneted double-flanged knife gate valve, 5

2-1 Cross section of a typical bonnetless knife gate valve with two-piece yoke and handwheel, 10
2-2 Exploded view of a typical bonnetless knife gate valve, 10

3-1 Bonneted knife gate valve with adjustable packing, 15
3-2 Bonnetless knife gate valve with live loaded packing, 15
3-3 Resilient-seated knife gate valve, 18
3-4 Bidirectional resilient-seated lugged-body knife gate valve, 19
3-5 Metal-seated lugged-body knife gate valve, 20
3-6 Perimeter resilient-seated semi-lug split body knife gate valve, 21

4-1 Handwheel manual override on electrically actuated bonnetless lugged knife gate valve, 24
4-2 Mechanical lockout device, 24
4-3 Swivel-type lockouts, 25
4-4 Gate guard safety screen, 26
4-5 Proximity sensor for manual or automated knife gate valves, 27

6-1 Knife gate valves in use at wastewater plant, 33
6-2 Knife gate valve suggested orientations in horizontal pipelines, 35
6-3 Installed slurry knife gate valve with cylinder actuation, 36
6-4 Installed tapping outlet knife gate valve, 36
6-5 Unidirectional knife gate valve in the reverse flow condition, 37
6-6 Traditional packing gland configuration, 38
6-7 Transverse seal packing configuration, 39
6-8 Example of properly supported installation on each side of the valve, 39

Documents
Document Sharing Hub
Copyright © 2020 American Water Works Association. All Rights Reserved.
Full document details: AWWA Manual M72 2020

This page intentionally blank.

Documents
Document Sharing Hub

Copyright © 2020 American Water Works Association. All Rights Reserved.

Full document details: AWWA Manual M72 2020

Tables

1-1 Typical service application requirements, 6
1-2 Typical applications and characteristics for various valves, 6

Documents
Document Sharing Hub
Copyright © 2020 American Water Works Association. All Rights Reserved.
Full document details: AWWA Manual M72 2020

This page intentionally blank.

Documents
Document Sharing Hub

Copyright © 2020 American Water Works Association. All Rights Reserved.

Full document details: AWWA Manual M72 2020

Preface

This manual presents the general practice for selection and installation of manual and automated knife gate valves for use in water and wastewater applications. This is a manual of recommended practice, not an AWWA standard. This document is intended to provide information and guidance on typical knife gate valves and their intended application. Questions about specific installations or applicability to specific applications not addressed in this manual should be directed to the manufacturer or supplier.

Information contained in this manual is useful for operators, technicians, and engineers to gain a basic understanding of the use and application of manual and automated knife gate valves. There are many variations of knife gate valves that may exceed the scope of this manual and require special consultations with the manufacturer to determine the associated application requirements. The valves' operational and design information is generic, and actual data from the intended valve manufacturer should be obtained before making the final selection of any type of knife gate valve and its options. This manual supplements information on the knife gate valves listed in ANSI/AWWA Standard C520 of latest edition: Knife Gate Valves, Sizes 2 in. (50 mm) Through 96 in. (2,400 mm).

AWWA standards are available for purchase by calling (800) 926-7337 or online at https://www.awwa.org/publications.

Manufacturers graciously provided valve illustrations and other documentation. AWWA does not endorse any manufacturer's products, and the names of the manufacturers have been removed from the material provided.

Metrification Note: Valves are listed in their current US designation (in.) and the equivalent nominal metric designation (mm). To obtain the actual metric equivalent, use a conversion factor of 25.4 mm per inch.

Documents
Document Sharing Hub
Copyright © 2020 American Water Works Association. All Rights Reserved.
Full document details: AWWA Manual M72 2020

This page intentionally blank.

Documents
Document Sharing Hub

Copyright © 2020 American Water Works Association. All Rights Reserved.

Full document details: AWWA Manual M72 2020

Committee Personnel

The AWWA Standards Committee on Knife Gate Valves, which developed this manual, had the following personnel at the time of approval.

Mark MacConnell, *Chair*

General Interest Members

Michael Altland, Mott MacDonald, Iselin, N.J.
Frank Blowers, Beaver Water District, Lowell, Ariz.
Anthony Holmes, Jones Edmunds & Associates, Inc., Winter Haven, Fla.
Christine Kirby, Lockwood, Andrews & Newnam, Inc., Houston, Tex.

Producer Members

David Gambetta, Lined Valve / Henry Pratt / Mueller, Woodland, Wash.
Paul Gifford, Mueller Co., Chattanooga, Tenn.
Jerome Grant, DeZURIK, Sartell, Minn.
Bruce James, Iconix Waterworks, Milton, Ont.
Al Libke, DeZURIK, Sartell, Minn.
Michael Long, Elite Valve, Oakville, Ont.

User Members

Jeffrey Archer, Denver Water, Denver, Colo.
Mark Johnson, Massachusetts Water Resources, Chelsea, Mass.
Mark MacConnell, Burnaby, B.C.
Ronald Masek, City of Houston, Houston, Tex.
Jim Young, City of Richmond, B.C.

Documents
Document Sharing Hub
Copyright © 2020 American Water Works Association. All Rights Reserved.
Full document details: AWWA Manual M72 2020

This page intentionally blank.

Documents
Document Sharing Hub

Copyright © 2020 American Water Works Association. All Rights Reserved.

Full document details: AWWA Manual M72 2020

Chapter 1

Introduction

AWWA knife gate valves are a versatile design manufactured in wafer, lug, and flanged body configurations from various materials. Designs are available with nonadjustable packing in bonneted-style valves and adjustable packing glands in nonbonneted-style valves. AWWA designs provide superior performance and reliability over conventional valve designs because of requirements for low- and high-pressure valves used in various applications associated with the waterworks industry. Knife gate valves are used in liquid and suspended solids handling. They are also used for flow isolation as well as throttling/control duties under certain operating conditions in modified configurations available from some manufacturers.

Most knife gate valve applications involve relatively low pressures, typically 150 psig (10 bar) or less; however, special designs are used up to 300 psig (20 bar) and higher (e.g., ASME Class 300). Because of some standard constructional features, knife gate valves in metal-seated configurations and selected packing material can handle major temperature fluctuations that may seriously damage or hamper the function of other valve designs or resilient-seated valves.

HISTORY

Simple gate valves date back to ancient times in Greek and Roman water and irrigation systems. These gates were mostly operated by manual levers or screws.

The first modern knife gate valve, simply known as the gate valve, was produced in Germany in 1881. Knife gate valve mass production started around 1928, primarily for the pulp and paper industry. The name "knife" gate valve has been used in conjunction with the thinner, round, beveled leading edge of the gate to distinguish this valve from the common wedge gate valve. The first generation of knife gate valves came with a bottom-draining pocket. Soon after, standard valves from most manufacturers were made without a bottom pocket and only in rising stem configurations. The name "pulp valve" was commonly associated with today's knife gate valve, which at the time was available in diameters of 3 in. (75 mm) up to 24 in. (600 mm).

Documents
Document Sharing Hub
Copyright © 2020 American Water Works Association. All Rights Reserved.
Full document details: AWWA Manual M72 2020

During the initial manufacturing years of the early 1900s, the valve was available only with cast iron bodies. Leakage was common in these earlier models, which only employed metal-seated configurations. (Newer models now offer unidirectional and bidirectional resilient seating at low and high pressures with zero leakage capabilities.)

A degree of control functionality was then incorporated into the valve. Many knife gate valves are operated with lever, handwheel, chainwheel, and bevel gear manual actuators (see Figure 1-1). Powered actuators, either cylinder or electric, are also used regularly in many industrial applications for knife gate valves, including the paper, oil, gas, and power industries.

PURPOSE

This manual will explain fundamental concepts and operation of knife gate valves, providing users with a technical background to understand, specify, and install knife gate valves in applications for which they are intended. The information in this manual should be used in conjunction with data from valve manufacturers to select valves and their associated actuation for a given application.

For isolation and control applications, actuator sizing parameters such as thrust will be explained in detail so that the sizing methodologies recommended by valve manufacturers can be applied. It is also important to understand how certain valve

Source: Elite Valve

Figure 1-1 Typical bonnetless knife gate valve

Documents
Document Sharing Hub

Copyright © 2020 American Water Works Association. All Rights Reserved.

Full document details: AWWA Manual M72 2020

application parameters such as flow rate, differential pressure, and direction of flow affect actuator selection and operation. Changes to the flow parameters after the selection and installation of the valve and actuator may affect the actuator's ability to properly operate the valve.

General installation guidelines will be presented to provide users with a basic understanding of startup procedures and enable them to troubleshoot certain valve installation issues, ensuring proper and effective operation of the valve.

BODY STYLE

Many different body styles are available. The type of service for which the valve is suited will directly influence the valve's body style as well as the connection methodology to piping systems. In all styles presented herein, there are two or more blind tapped holes in the body chest area to maintain metal seal integrity to the internal packing chamber. Shorter flange bolts will be required in these locations.

Wafer

This is installed by compressing the slender valve body between the gaskets of two adjoining flanges. This body style does not have any threaded holes to hold the valve in place between the flanges but can feature bored-out locating holes for adjoining flange through bolts around the perimeter. Better pipeline sealing characteristics are obtained when the valve body contains raised faces in conjunction with mating raised face flanges. It is not recommended that valves with raised faces be used to mate with flat-faced, ring-type flanges as the flat-faced flange may not be able to withstand the forces placed on its outermost edge across the gap, and the sealing characteristics may be detrimentally affected. This valve cannot be used for end-of-line or dead-end service.

Lug

This valve body style comes with a fully threaded bolting pattern through the body lugs that are located radially around the outside perimeter of the valve (see Figure 1-2). The lug

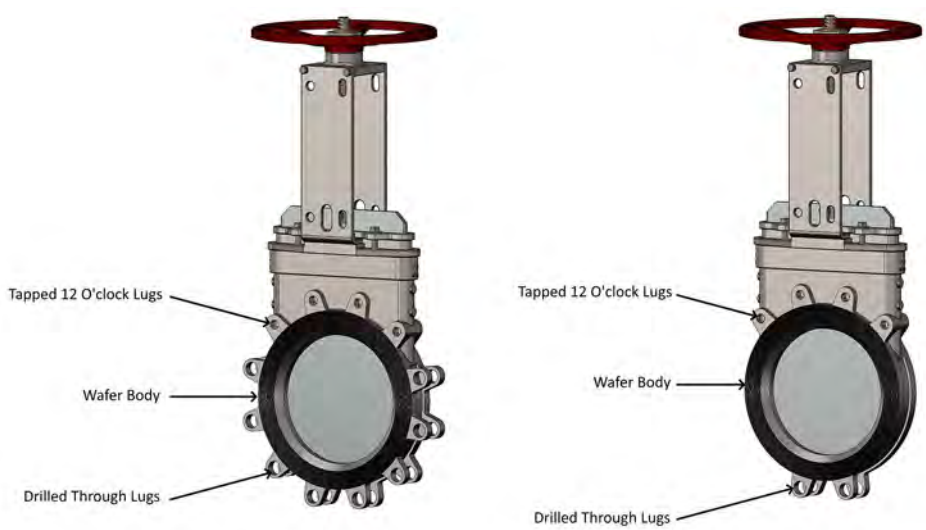

Source: Elite Valve

Figure 1-2 Typical bonnetless knife gate valve with drilled-through bolt pattern (left) and tabless wafer body (right)

Documents
Document Sharing Hub
Copyright © 2020 American Water Works Association. All Rights Reserved.
Full document details: AWWA Manual M72 2020

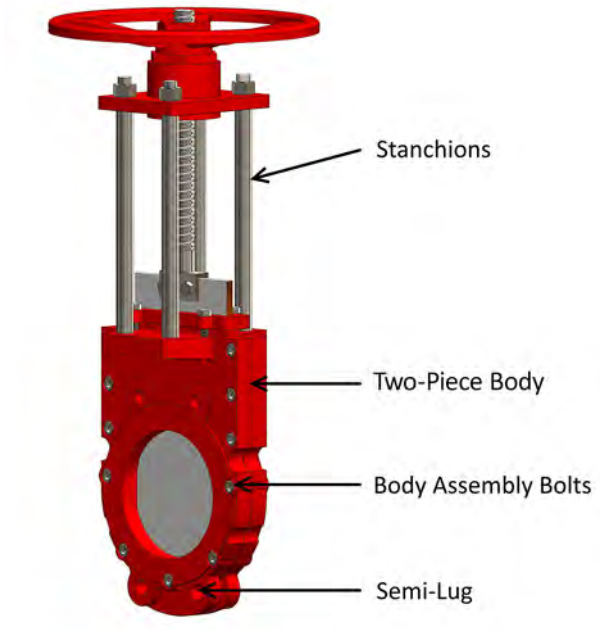

Source: Elite Valve

Figure 1-3 Semi-lug bonnetless knife gate valve with two-piece body and stanchions

and bolt pattern can vary to match adjoining companion flanges based on the required flange standard and design pressure classifications of the system component or facility. This valve style is ideal for end-of-line service or where it may be necessary to disconnect one side of the valve from the adjacent piping without having to depressurize the opposite side of the valve.

Semi-Lug

This body style is a cross between the wafer and lug styles (see Figure 1-3). It features threaded lugs through the valve body and around the perimeter of the valve. Typically, only the 12 o'clock and 6 o'clock lug positions are threaded. As a result of the lug locations, this valve can be removed without complete disassembly of the mating piping. It is not recommended for end-of-line service because of the reduced number of fastening bolts, which lends this style to rely on the adjoining companion flanges and rigid piping system to resist the pressure and thrust forces when closed.

Flanged

Flanged valves have a longer face-to-face dimension than wafer- or lug-style valves and may not be interchangeable without having to modify either the upstream or downstream adjacent piping (see Figure 1-4). Depending on the piping configuration, this may or may not be possible. The bolt holes are full bore through the flange portion of the valve body matching the requirements of the applicable flange standard and are not threaded. This valve style is ideal for end-of-line service or where it may be necessary to disconnect one side of the valve from the adjacent piping without having to depressurize the opposite side of the valve.

Documents
Document Sharing Hub
Copyright © 2020 American Water Works Association. All Rights Reserved.
Full document details: AWWA Manual M72 2020

Source: Elite Valve

Figure 1-4 Typical bonneted double-flanged knife gate valve

GENERAL APPLICATION

In its correct form and configuration, a manual or automated knife gate valve is ideal for use in many applications handling water, wastewater, viscous media, dry powder, pellets of various materials, slurries, sludges, mine tailings, and food, as well as for use in the cement, brewing, and pulp/paper industry.

Most knife gate valve manufacturers offer the valves in rising and non-rising stem configurations that are actuated with a lever, handwheel, chainwheel, pneumatic cylinder, hydraulic cylinder, or electric motor.

For water and wastewater uses, a knife gate valve can be configured for exposed, buried, submerged, and vaulted applications. In buried and submerged applications, the addition of the pressure bonnet—which encapsulates the entire gate during valve cycling—will keep the gate within the pressure boundary and eliminate the packing seal around the gate. In these installations, it is recommended to install a sleeve surrounding the stem of the knife gate valve from the top of the bonnet up to the surface to protect the stem and avoid interference with the stem during cycling operations. There are various types of actuation that can offer different options for indicating the valve's operational position.

The knife gate valve can be designed for applications where the flow is applied to the gate in either a unidirectional or bidirectional service condition. Valve designs for various applications include metal- or resilient-seated configurations. Resilient-seat designs can offer zero leakage performance at the manufacturer's specified pressures. However, in metal-seated valve configurations, an acceptable manufacturer-specified leakage rate is typically permitted. In certain applications, knife gate valve designs may require minimum pressures to ensure zero leakage, so requirements must be reviewed before selection of a design for the intended valve application. This information is found in either the manufacturer's product literature or in their installation, operation, and maintenance manual. In all cases, both documents from the manufacturer should be reviewed before the selection of a valve for any application to ensure the anticipated performance meets the criteria of the intended application.

Documents
Document Sharing Hub
Copyright © 2020 American Water Works Association. All Rights Reserved.
Full document details: AWWA Manual M72 2020

Table 1-1 Typical service application requirements

	Wafer	Full Lug	Semi-Lug	Flanged
End-of-line Removal	XX	√√	X	√√
Removal from Fixed Pipework	√√	√	√	X
Interchangeable with Other Body Styles	√√	√√	√√	XX
Pressure Isolation	√	√√	√	√√

Source: Elite Valve
√√ – Recommended for use
√ – Acceptable for use
X – Not recommended for use
XX – Do not use

Table 1-2 Typical applications and characteristics for various valves

	Knife Gate Valves	Wedge Gate Valves	Butterfly Valves	Ball Valves	Plug Valves
Stringent Solids Handling	√	X	X	X	√
Throttling	X	X	√	√	√
Full Port Flow	√	√	X	√	√
Seal Options	√	X	√	X	√
Replaceable Seals	√	X	√	√	X

Source: Elite Valve
√ – Recommended
X – Not recommended

Table 1-1 indicates the typical in-service application requirements for the different knife gate body styles.

Depending on the design and configuration of the internal porting, these valves can be used in applications where piping systems require pigging or swabbing. Dimensions must be validated by the manufacturer for use in these applications.

In most body designs, the valve face is either flat or raised depending on the valve's pressure rating. Flat-faced valve bodies are typically used in low- to medium-pressure applications, while raised-face valve bodies are generally used in high-pressure applications. The gasket type and material to be used should be verified with the corresponding valve or pipe flange rating and dimension for each application, as the gaskets will be exposed to the pipeline media when using knife gate valves. Certain valve designs may incorporate O-ring seals or special inserts directly into the flange face, in which case flange gaskets may not be required.

Knife gate valves with adjustable packing glands or bonnetless configurations are not designed or recommended for buried or submerged service applications.

Table 1-2 shows various types of valves and associates typical characteristics with their recommended applications, operation, and maintenance processes.

Typically, valve costs are directly related to weights of the valve. Given the design of significantly heavier wedge gate, butterfly, ball, and plug valves, knife gate valves are typically less expensive as they have a narrower design profile than the other valve types. This difference in cost becomes more significant as the valves increase in size.

AVA Documents Document Sharing Hub

Copyright © 2020 American Water Works Association. All Rights Reserved.

Full document details: AWWA Manual M72 2020