bsi.

...making excellence a habit.™

Please be aware that this PDF has been created from the original hardcopy document, which might not be in good condition and so the PDF might reflect this.

BSI Group
389 Chiswick High Road
London, W4 4AL
United Kingdom

T: +44 20 845 086 9001
F: +44 20 8996 7400
cservices@bsigroup.com
bsigroup.com

British Standards Limited
Registered in England no: 07864997
Registered address: 389 Chiswick High Road
London, W4 4AL, United Kingdom

AVA Documents
INVESTORS IN PEOPLE
Document Sharing Hub

Full document details: BS 1192:1953

Full document details: BS 1192:1953

SUPERSEDED BY 1969 ISSUE

BRITISH STANDARD 1192 : 1953

DRAWING OFFICE PRACTICE

FOR ARCHITECTS AND BUILDERS

BRITISH STANDARDS INSTITUTION

AVA Documents
Document Sharing Hub

Amendment No. 1, published 8 December, 1954

to B.S. 1192: 1953, Drawing office practice for architects and builders

Page 9. Delete Fig. 3 and insert the following:—

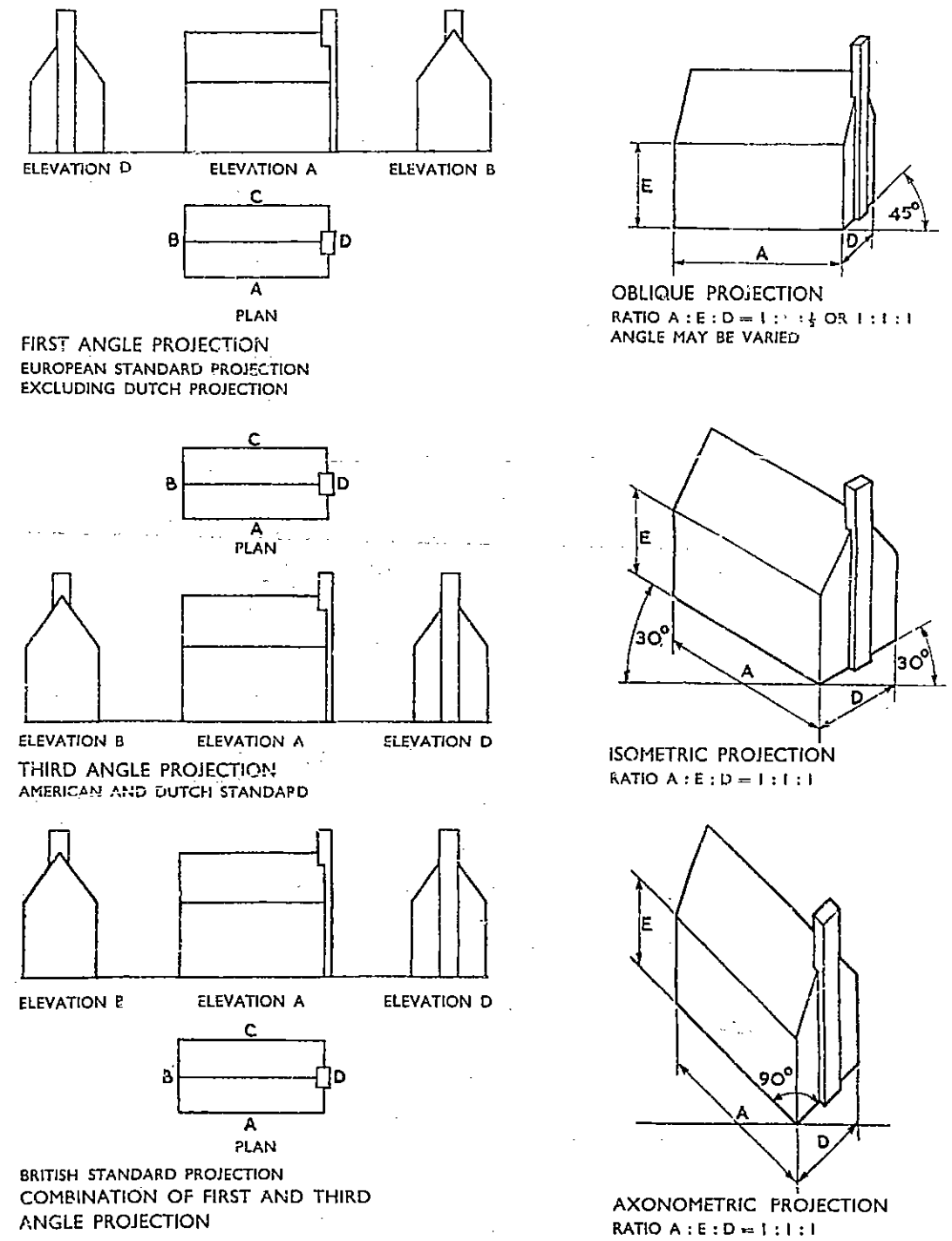

Fig. 3. Methods of projection

Full document details: BS 1192:1953
AVA Documents
Document Sharing Hub

BRITISH STANDARD RECOMMENDATIONS FOR

DRAWING OFFICE PRACTICE

FOR ARCHITECTS AND BUILDERS

B.S. 1192 : 1953

Price 7/6 net

BRITISH STANDARDS INSTITUTION

INCORPORATED BY ROYAL CHARTER

TELEGRAMS: STANDARDS, SOWEST, LONDON TELEPHONE: ABBEY 3333

SALES BRANCH TELEPHONE: VICTORIA 0522

24 VICTORIA STREET, LONDON, S.W.1

Full document details: BS 1192:1953

Documents
Document Sharing Hub

THIS BRITISH STANDARD, having been approved by the Building Divisional Council, was published under the authority of the General Council on 15th May, 1953.

First issued, December, 1944.
First revision, May, 1953.

In order to keep abreast of progress in the industries concerned, British Standards are subject to periodical review. Suggestions for improvements will be recorded and in due course brought to the notice of the committees charged with the revision of the standards to which they refer.

A complete list of British Standards, numbering over 1800, indexed and cross-indexed for reference, together with a list of new standards in preparation, will be found in the Institution's Yearbook price 7s. 6d.

This standard makes reference to the following British Standards :—

B.S. 108. Graphical symbols for general electrical purposes.
B.S 308. Engineering drawing office practice.
B.S. 560. Engineering symbols and abbreviations.
B.S. 990. Metal casement windows and casement doors for domestic buildings.
B.S. 1265–68. Drawing boards and tee squares.
B.S. 1553. Pt. 1. Graphical symbols for general engineering.
B.S. 1635. Graphical symbols for fire protection drawings.
B.S. 1710. Colour identification of pipe lines.

British Standards are revised, when necessary, by the issue either of amendment slips or of revised editions. It is important that users of British Standards should ascertain that they are in possession of the latest amendments or editions.

B/61

CO-OPERATING ORGANIZATIONS

The Building Divisional Council under whose supervision this British Standard was prepared, at the suggestion of the Ministry of Works, consists of representatives from the following Government departments and scientific and industrial organizations :—

*Admiralty
*Air Ministry
Board of Trade
Crown Agents for the Colonies
Department of Health (Scotland)
*D.S.I.R.—Building Research Station
*Incorporated Association of Architects and Surveyors
Institution of Civil Engineers
*Institution of Municipal Engineers
*Institution of Structural Engineers
Ministry of Housing and Local Government
*Ministry of Works
National Council of Building Material Producers
*National Federation of Building Trades Employers
*Royal Institute of British Architects
*Royal Institution of Chartered Surveyors
*War Office

The Government departments and scientific and industrial organizations marked with an asterisk in the above list, together with the following, were directly represented on the committee entrusted with the preparation of this British Standard :—

Architectural Association (Inc.)
Association of Building Technicians
British Railways, The Railway Executive
County Architects' Society
Drawing Office Material Manufacturers and Dealers' Association
Institution of Sanitary Engineers
Metropolitan Police
Royal Incorporation of Architects in Scotland
University College of London

AVA Documents
Document Sharing Hub

Full document details: BS 1192:1953

CONTENTS

	Page
Co-operating Organizations	3
Foreword	5
1. Sizes of drawings	5
2. Sizes of drawing boards	8
3. Lines	8
Thickness of lines	8
Centre lines	8
Hidden outlines or overhead lines	8
Break lines	8
Section lines	8
Dimension lines	8
4. Dimensions and lettering	8
Dimension	8
Finished floor levels	8
Necessary dimensions	8
Lettering	8
5. Scales	10
6. Projection	10
First angle projection	10
Third angle projection	10
Combination of first and third angle projection	10
Oblique, isometric and axonometric projection	10
7. Graphical symbols	10
Windows, doors, etc.	10
Electrical	10
Gas	10
7. Graphical symbols (*continued.*)	
Sanitary fittings, plumbing and drainage	17
Water, gas, heating, ventilating	17
Structural steelwork	18
Topographical	18
8. Representation of materials	18
Hatching	18
Colouring	18
9. Abbreviations	18
10. Planning of drawing sheets	19
Layout of drawing sheets	19
Title panel	19
Revision panel	19
Position of punched holes for binding prints	19
North points	19
11. Numbering of plan units	19
12. Identification of drawings	26
Title panel	26
Drawing numbers	36
13. Selection of drawing papers, tracing cloth, etc.	36
14. Preparation of tracing paper and cloth	36
15. Reproduction of drawings	36
Dye line prints	36
'True-to-scale' prints	36
Ferro-gallic prints	36
Ferro-prussiate prints	36
Bromide prints	36
Reflex prints	39

LIST OF ILLUSTRATIONS

Fig.		Page
1.	Drawing paper sizes	6
2.	Lines	7
3.	Methods of projection	9
4.	Graphical symbols for windows	11
5.	Graphical symbols for doors	11
6a.	Electrical symbols	12–14
6b.	Gas symbols	14
7.	Structural steelwork symbols	15
8.	Graphical symbols for sanitary fitments, etc.	15–17
9.	Symbols for materials in section	20–25
10.	Layout of drawing sheets	27
11.	Typical title panels	28
12.	Part of ½-inch scale drawing	29
13.	Part of ½-inch scale drawing	31
14.	Filing of drawings : Methods of folding prints	33
15.	Position of punch holes for binding drawings	34
16.	System of numbering stanchions and beams	34
17.	Marking plan : Basement showing ground floor steel	35
18.	Numbering of plan units	37

AVA Documents
Document Sharing Hub

BRITISH STANDARD RECOMMENDATIONS FOR DRAWING OFFICE PRACTICE FOR ARCHITECTS AND BUILDERS

FOREWORD

These revised recommendations which have been prepared under the authority of the Building Divisional Council at the suggestion of the Ministry of Works and the Royal Institute of British Architects, supersede B.S. 1192 : 1944, 'Architectural and building drawing office practice'.

The standard sizes of drawings are the same as those recommended in B.S. 308 : 1943, 'Engineering drawing office practice', and an illustration is included indicating how these sizes may be economically cut from 30 inch and 40 inch rolls of material.

Where references are made to British Standards the requirements of the standard specified should be adhered to. For easy reference these are listed on page 3.

These recommendations are based on the use of British units, but are generally applicable also to the metric system. They are intended to apply to new drawings made in connection with a contract when placed, and should not preclude the submission, by contractors or others, of drawings previously prepared in accordance with the conventions which they have been accustomed to employ hitherto.

RECOMMENDATIONS

SIZES OF DRAWINGS

1. It is recommended that the standard sizes for drawings shall be as shown in Table 1.

TABLE 1. STANDARD SIZES OF DRAWINGS

Size of sheet as cut from roll	Extreme size* between border lines	Total allowance for trimming
in.	in.	in.
72×40	70×38	2
60×40	58×38	2
53×30	52×29	1
40×30	39×29	1
40×27	39×26	1
40×15	39×14	1
30×22	29×21	1
30×20	29×19	1
27×20	26×19	1
20×15	19×14	1
15×10	14¼ × 9¼	¾
13× 8	12¼ × 7¼	¾
10× 8	9¼ × 7¼	¾

* These sizes are reduced if a binding edge is required as shown in Fig. 10.

The manner in which the standard sheets are obtained from 30 in. and 40 in. rolls is shown in Fig. 1.

In selecting the standard sizes of sheets, attention has been given to the following considerations :—

a. The economical use of standard rolls of drawing and tracing paper, tracing cloth and sensitised paper and cloth, all of which are manufactured in 30 in. and 40 in. widths. When cut sheets are used these also, in the first place, have to be cut from 30 in. and 40 in. rolls.

b. The selection of sizes which will enable drawings and prints to be cut without any waste from either 30 in. or 40 in. rolls whichever are available. This is possible with sizes No. 4, 6, 8, 10, 11 and 13.

c. The provision of a blank border which will enable prints to be trimmed, if necessary, without incurring the use of uneconomical sizes of sensitised material to allow for trimming. Finished prints which have been trimmed will be slightly less in size than the original tracings, but not less than the frame or border line size of the tracings.

d. The inclusion of certain traditional drawing paper and commercial stationery sizes which are in very common use.

e. The desire to reduce the large number of arbitrarily selected sizes which have been used in the past.

NOTE 1. The recommended border line sizes are the MAXIMUM sizes ; the border lines may be drawn further in from the edge of the sheet if desired.

NOTE 2. Drawing, tracing and sensitised material sheets should be cut to the standard sheet sizes shown. After printing, the sensitised material sheets may be trimmed if necessary, but it is recommended that the prints be left as large as possible and in any case the border lines which appear on the tracings must not be trimmed off the prints.

NOTE 3. No notes or figures which are required to be reproduced on the print should appear outside the border lines.

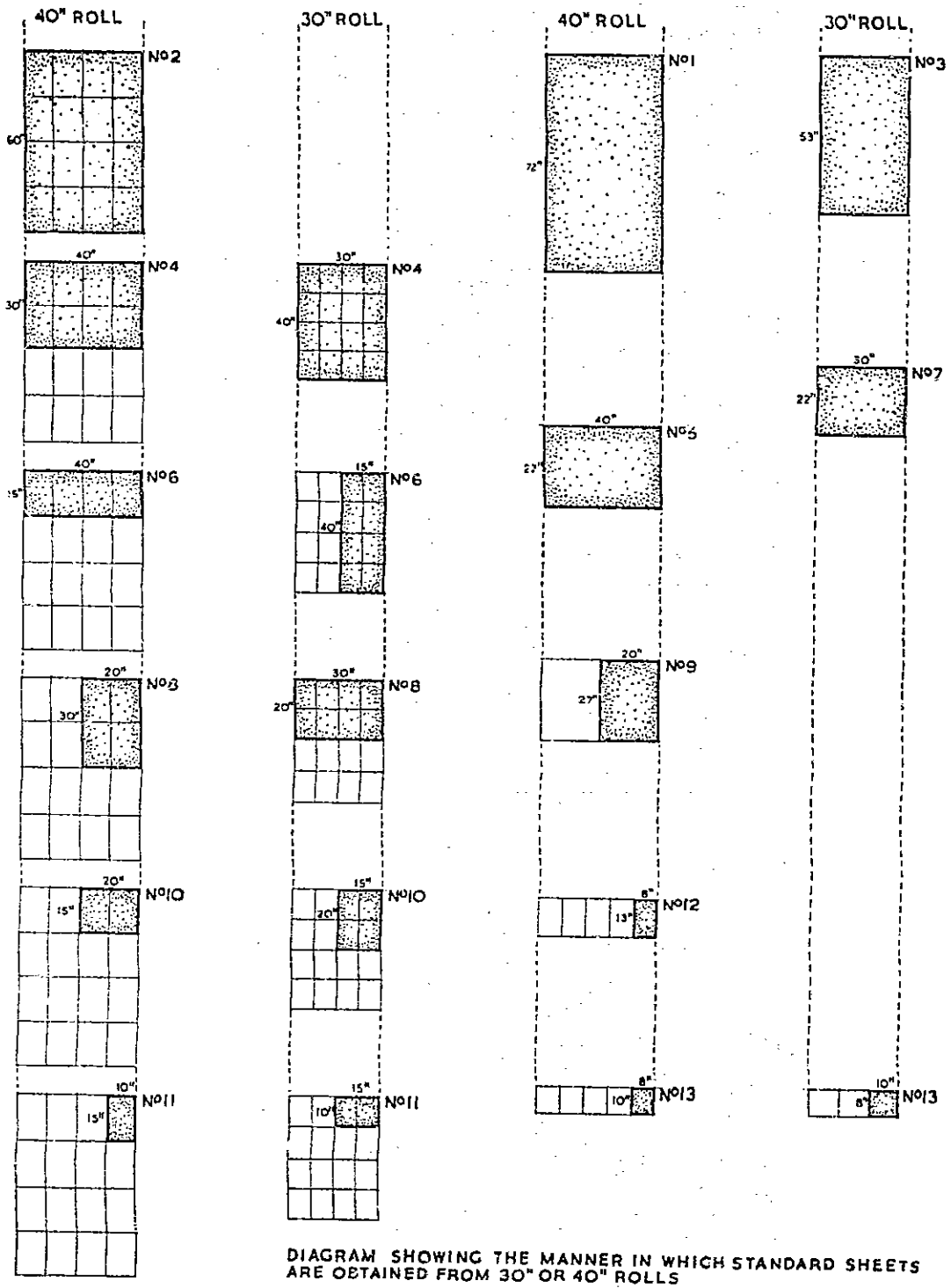

Fig. 1. Drawing paper sizes

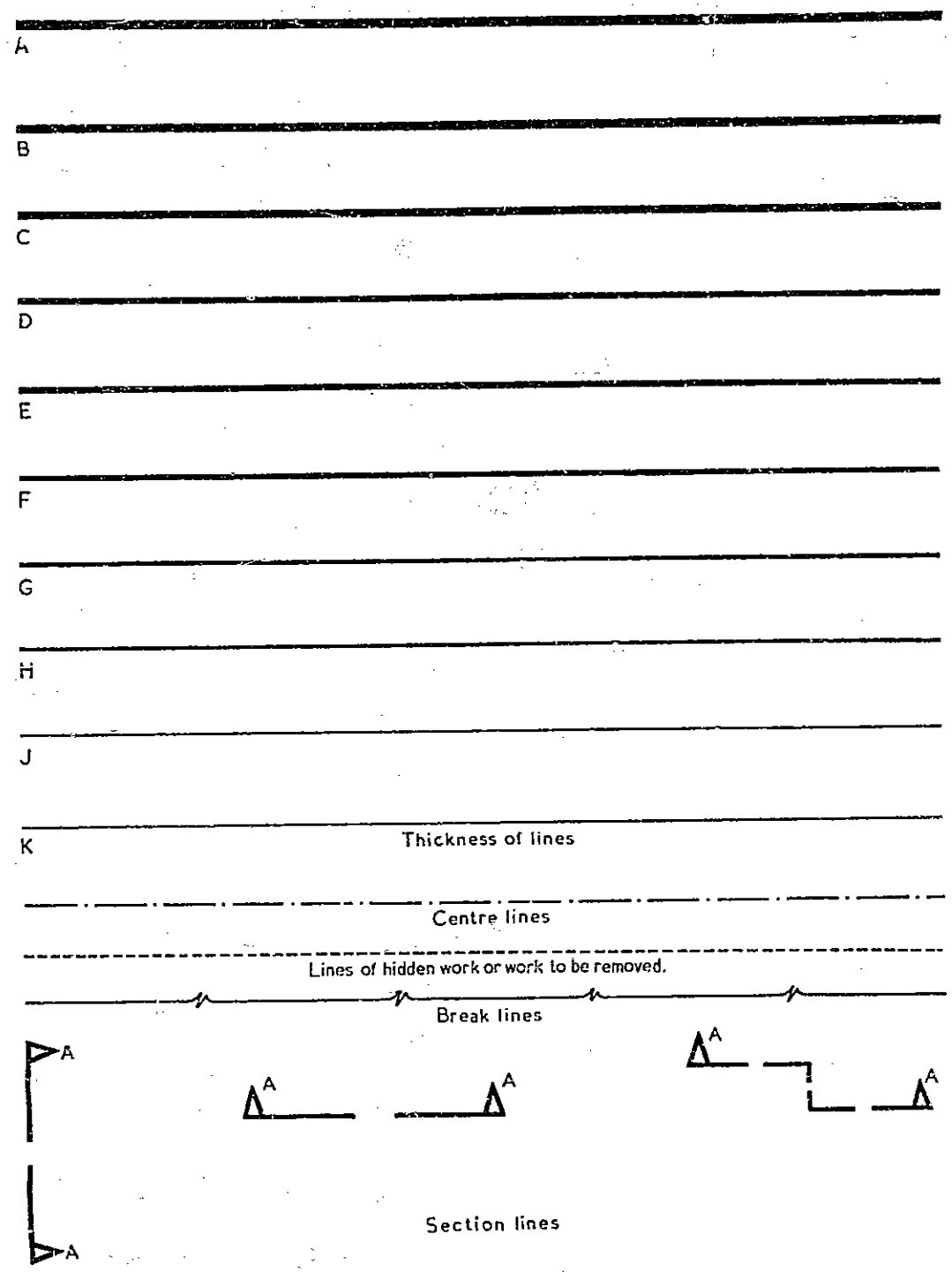

Fig. 2. Lines

Full document details: BS 1192:1953
AVA Documents
Document Sharing Hub

Full document details: BS 1192:1953

NOTE 4. On the commercial stationery sheet sizes, 13 in. × 8 in. and 10 in. × 8 in., border lines may be omitted if desired, but it is recommended that the drawing space utilised should not exceed that determined by the border line dimensions.

NOTE 5. Where sheets larger than those listed are required, it is recommended that the dimensions should be increased in the proportions shown on the drawing, that is by 15 in. or 10 in. increments.

NOTE 6. It is common practice to cut or order sheets by using a sample sheet or print from a previous supply. Because of inaccuracies which occur and thus are successively increased, repeat orders might result in great deviations from the original size. In order to avoid this, it is recommended that all tracings should be marked with the standard sheet size in inches in a convenient place outside the border lines. The recognition of different sheet sizes is also simplified.

SIZES OF DRAWING BOARDS

2. It is recommended that the standard sizes of drawing boards shall be :

Size A.	54 in. × 32 in.	Known as Antiquarian.
Size B.	42 in. × 32 in.	(See note below).
Size C.	32 in. × 23 in.	Known as Imperial.
Size D.	23 in. × 16 in.	Known as half Imperial.

NOTE. The size of the double elephant board is 42 in. × 29 in. Manufacturers can provide drawing boards 42 in. × 32 in. to take 40 in. × 30 in. drawings and it is recommended that this larger size should be used in future in place of the 42 in. × 29 in. size. Drawing boards should be constructed in accordance with the requirements of B.S. 1265-68, 'Drawing boards and tee squares'.

LINES (*See Fig. 2*)

3. *a. Thickness of lines.* A full line should be used to indicate visible outlines, and to assist in securing uniformity of practice a range of line thicknesses is indicated in Fig. 2.

b. Centre lines. A chain dotted line as shown in Fig. 2 should be used to indicate centre lines. The line should extend for a short distance beyond the outline to which it refers and when required to indicate dimension terminations should be suitably extended so that the dimension figures are clear of the drawing outlines.

c. Hidden lines or overhead lines. A broken line consisting of short dashes should be used for hidden outlines and work to be removed. Broken lines should commence with a dash cutting the adjoining outline, and all lines should cross at corners.

Hidden outlines to show interior or hidden details should be included only where their use definitely assists in the interpretation of the drawing.

d. Break lines. A ruled line with short zigzags, shown in Fig. 2, should be used for breaks in continuity of the drawing.

e. Section lines. Recommended methods of indicating cutting planes by means of section lines are shown in Fig. 2.

f. Dimension lines. Dimension and projection lines should be full lines, thin in relation to the outline. They should be continuous and not interrupted for the insertion of dimension figures.

DIMENSIONS AND LETTERING (*See Figs. 12 and 13*)

4. *a. Dimension.* Dimension lines should always be indicated and centre lines and outlines should not be used to carry dimensions.

Arrow heads should have sharp points touching the lines to which they refer. An alternative practice in general use for terminating dimension lines is to mark the intersection of the dimension and projection lines with a dot.

Dimension figures should be placed immediately above the corresponding dimension line, either near the centre or at the extreme left. The figures should be disposed along the line and not at right angles to the line. Running dimensions should be used only for booking survey measurements.

All dimensions should be so arranged that they can be read from the bottom or right edge of the drawing.

Typical examples of the use of dimension lines are shown in Figs. 12 and 13.

Where the structure is framed, all dimensions should be related to the column or stanchion centres, which in turn are related to the building line.

Where the structure is of wall bearing construction, dimensions should be related to the rough unfinished wall faces.

b. Finished floor levels. A suitable point on the main ground floor should be taken as a local datum and all other floors related to it. If no other local datum is specified, this should be related to ordnance datum (stating whether Newlyn or Liverpool)*. Levels of floors should be expressed in feet and inches, those above the datum being prefixed with the plus sign, and those below with the minus sign. Finished floor levels should be indicated by the letters FFL followed by the level value in a circle. Where there is a change in floor level, a line shall be drawn on plan.

c. Necessary dimensions. Dimensions necessary for carrying out the work should be given. It should not be necessary to scale a drawing, other than a full size detail. A possible exception is the representation on a drawing of topographical features and buildings adjacent to the work represented, where precise dimensions are not required.

Figured dimensions which are not drawn to scale should be clearly indicated by the addition of the letters NTS except where break lines make this obvious.

Dimensions of one foot and over should be expressed in feet and inches except for the sizes of those commercial materials and engineering details which are usually expressed in inches.

d. Lettering. It is not considered desirable that there should be a standard form of lettering for drawings. The object should be to provide, with reasonable rapidity, distinct uniform letters and figures which will ensure the production of good and legible prints.

Whenever practicable, notes should be collected in groups and not spread over the whole of the drawing.

Stencils and letter guides help to obtain uniformity in lettering, especially when different draughtsmen are working on the same set of drawings.

Underlining of lettering on drawings should not be used except where special emphasis is required. Punctuation marks should not be used unless essential to the sense of the note.

* See page 18. Clause 7g.

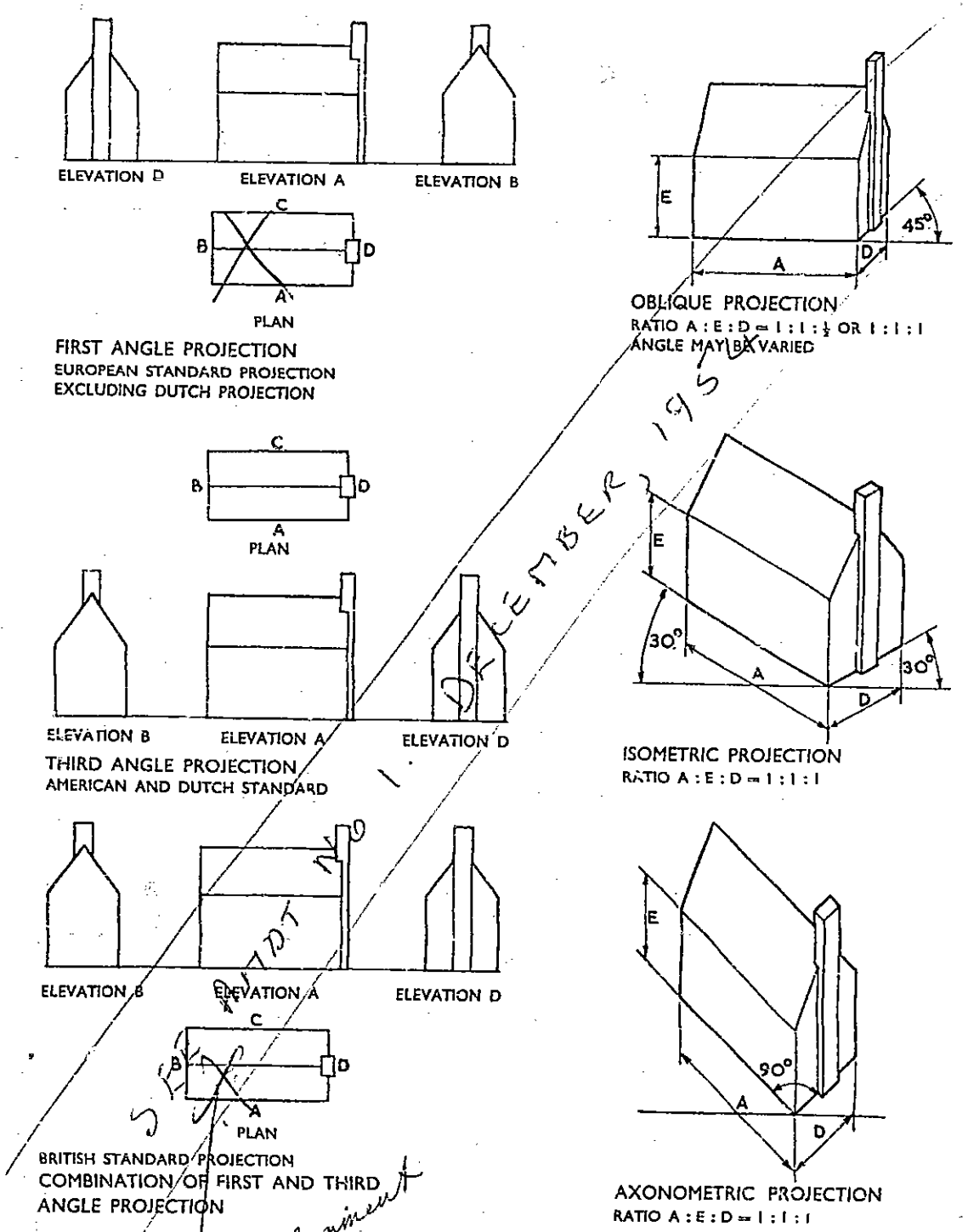

Fig. 3. Methods of projection

AVA Documents
Document Sharing Hub