bsi.

...making excellence a habit.™

Please be aware that this PDF has been created from the original hardcopy document, which might not be in good condition and so the PDF might reflect this.

BSI Group
389 Chiswick High Road
London, W4 4AL
United Kingdom

T: +44 20 845 086 9001
F: +44 20 8996 7400
cservices@bsigroup.com
bsigroup.com

British Standards Limited
Registered in England no: 07864997
Registered address: 389 Chiswick High Road
London, W4 4AL, United Kingdom

AVA Documents
INVESTORS IN PEOPLE
Document Sharing Hub

Full document details: BS 1560:1949

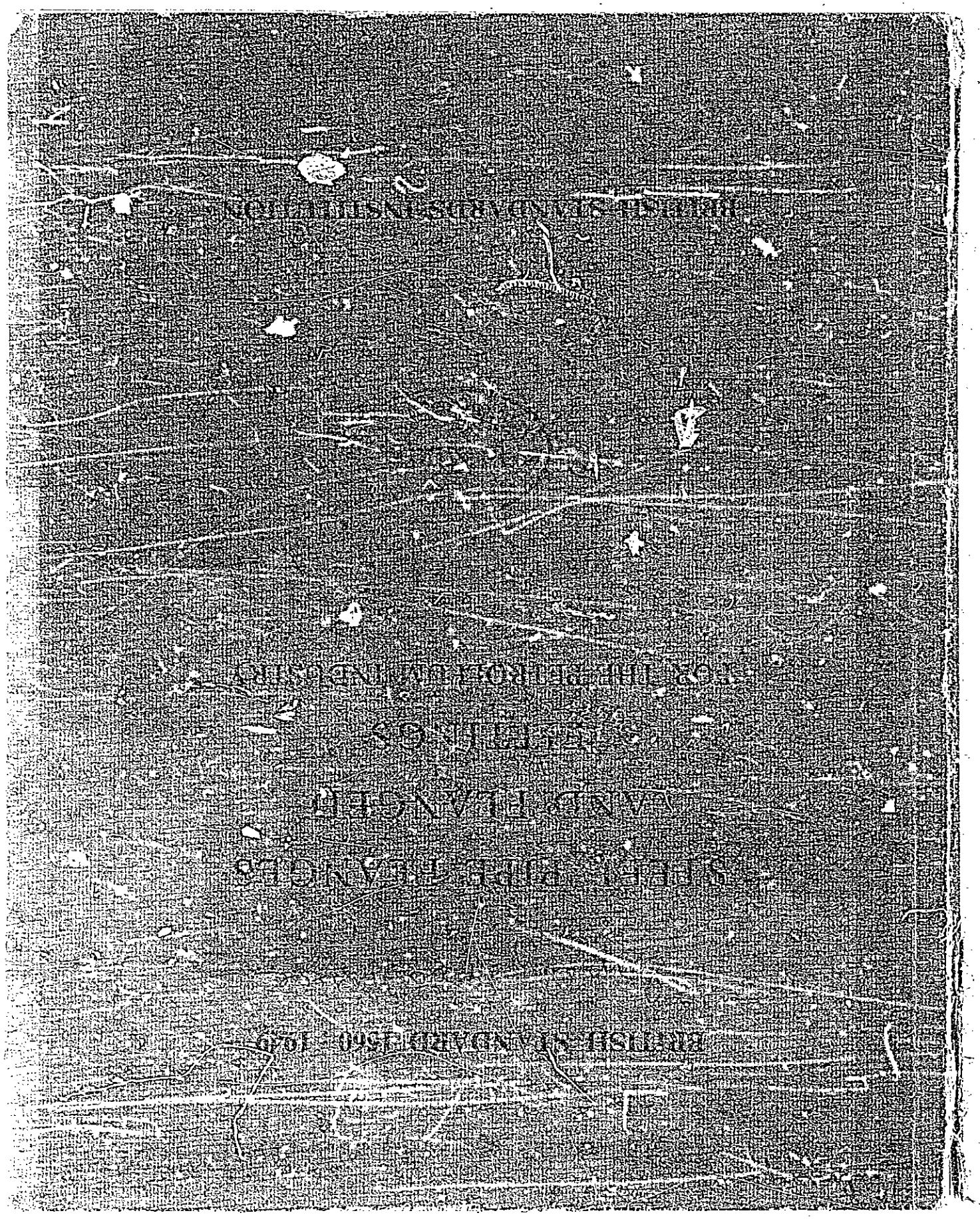

AVA Documents
Document Sharing Hub

1949

BRITISH STANDARD FOR

STEEL PIPE FLANGES AND FLANGED FITTINGS

FOR THE PETROLEUM INDUSTRY

B.S. 1560 : 1949

BRITISH STANDARDS INSTITUTION
LIBRARY
24 VICTORIA STREET LONDON S.W.1

Price ~~12/6~~ 15/- net, post free

BRITISH STANDARDS INSTITUTION

INCORPORATED BY ROYAL CHARTER

24/28 VICTORIA STREET, LONDON, S.W.1

TELEGRAMS: STANDARDS, SOWEST, LONDON TELEPHONE ABBEY 3333

AVA Documents
Document Sharing Hub

THIS BRITISH STANDARD, having been approved by the Petroleum Equipment Industry Standards Committee and endorsed by the Chairman of the Engineering Divisional Council, was published under the authority of the General Council as a British Standard on 18th November, 1949.

The Institution desires to call attention to the fact that this British Standard does not purport to include all the necessary provisions of a contract.

In order to keep abreast of progress in the industries concerned, British Standards are subject to periodical review. Suggestions for improvements will be recorded and in due course brought to the notice of the committees charged with the revision of the standards to which they refer.

A complete list of British Standards, numbering over one thousand, indexed and cross-indexed for reference, together with an abstract of each standard, will be found in the Institution's Yearbook, price 5s. post free.

This British Standard requires reference to the following :—

B.S. 84. Screw threads of Whitworth form.

B.S. 1600. Wrought steel pipe for the petroleum industry (in course of preparation).

British Standards are revised, when necessary, by the issue either of amendment slips or revised editions. It is important that users of British Standards should ascertain that they are in possession of the latest amendments or edition.

Users wishing to be kept informed of any alteration to this standard should notify Sales and Distribution Department of the Institution, giving the number and title of the standard.

CO-OPERATING ORGANIZATIONS

The Petroleum Equipment Industry Standards Committee, under whose supervision this British Standard was prepared, consists of representatives from the following Government departments and scientific and industrial organizations :—

*Council of British Manufacturers of Petroleum Equipment
Institute of Petroleum
Ministry of Fuel and Power
*Oil Companies Materials Committee

The industrial organizations marked with an asterisk in the above list, together with the following, were directly represented on the committee entrusted with the preparation of this British Standard :—

British Iron & Steel Federation

CONTENTS

	Page
Co-operating organizations	2
Foreword	5
Specification	
1. Scope	5
2. Pressure ratings and tests	5
3. Size	5
4. Materials	5
a. Steel castings	6
b. Steel forgings	6
c. Bolting material	6
5. Minimum body thickness	6
6. Facings	6
7. Ring-joint facings	7
8. Rings for ring joints	7
9. Bolting	7
a. Drilling	7
b. Dimensions	7
c. Threads	7
d. Working stresses	7
10. Spot facing	7
11. Fittings dimensions	7
12. Laterals	7
13. Reducing fittings	8
14. Side outlet fittings	8
15. Threading of screwed flanges	8
16. Bore of flanges	8
17. Blank or blind flanges	8
18. Welding neck flanges	8
19. Concentric reducing screwed and slip-on welding flanges	8
20. Concentric reducing welding neck flanges	8
21. Tolerances for welding neck flanges	8
a. Outside diameter of hub	8
b. Thickness of hub	8
c. Bore	8
d. Overall length of hub	8
22. Welding bevel	8
23. Hydrostatic test	9
24. Marking	9
25. Inspection	9
26. Testing facilities	9

	Page
Table 1. Reducing screwed and slip-on welding flanges, Classes 150 to 2500	10
Table 2. Facing dimensions for flanges, Classes 150, 300, 400, 600, 900, 1500 and 2500	14
Table 3. Dimensions of flanges, Class 150	15
Table 4. Dimensions of welding neck flanges, Class 150	16
Table 5. Dimensions of flanged fittings with projecting faces, Class 150	17
Table 6. Dimensions of flanged fittings with ring-joint faces, Class 150	18
Table 7. Facing dimensions for ring-joint flanges, Class 150	19
Table 8. Dimensions of flanged base elbows and base tees, Class 150	20
Table 9. Dimensions of flanges, Class 300	21
Table 10. Dimensions of welding neck flanges, Class 300	22
Table 11. Dimensions of flanged fittings with projecting faces, Class 300	23
Table 12. Dimensions of flanged fittings with ring-joint faces, Class 300	24
Table 13. Facing dimensions for ring-joint flanges, Class 300	25
Table 14. Dimensions of flanged base elbows and base tees, Class 300	26
Table 15. Dimensions of flanges, Class 400	27
Table 16. Dimensions of welding neck flanges, Class 400	28
Table 17. Centre-to-flange-edge dimensions of flanged fittings, Class 400	29
Table 18. Centre-to-face dimensions of flanged fittings, Class 400	30
Table 19. Facing dimensions for ring-joint flanges, Class 400	31
Table 20. Dimensions of flanged base elbows and base tees, Class 400	32
Table 21. Dimensions of flanges, Class 600	33
Table 22. Dimensions of welding neck flanges, Class 600	34
Table 23. Centre-to-flange-edge dimensions of flanged fittings, Class 600	35
Table 24. Centre-to-face dimensions of flanged fittings, Class 600	36
Table 25. Facing dimensions for ring-joint flanges, Class 600	37
Table 26. Dimensions of flanged base elbows and base tees, Class 600	38

AVA Documents
Document Sharing Hub

CONTENTS (*continued*)

	Page
Table 27. Dimensions of flanges, Class 900	39
Table 28. Dimensions of welding neck flanges, Class 900	40
Table 29. Centre-to-flange-edge dimensions of flanged fittings, Class 900	41
Table 30. Centre-to-face dimensions of flanged fittings, Class 900	42
Table 31. Facing dimensions for ring-joint flanges, Class 900	43
Table 32. Dimensions of flanged base elbows and base tees, Class 900	44
Table 33. Dimensions of flanges, Class 1500	45
Table 34. Dimensions of welding neck flanges, Class 1500	46
Table 35. Centre-to-flange-edge dimensions of flanged fittings, Class 1500	47
Table 36. Centre-to-face dimensions of flanged fittings, Class 1500	48
Table 37. Facing dimensions for ring-joint flanges, Class 1500	49
Table 38. Dimensions for flanged base elbows and base tees, Class 1500	50
Table 39. Dimensions of flanges, Class 2500	51
Table 40. Dimensions of welding neck flanges, Class 2500	52
Table 41. Centre-to-flange-edge dimensions of flanged fittings, Class 2500	53
Table 42. Centre-to-face dimensions of flanged fittings, Class 2500	54
Table 43. Facing dimensions for ring-joint flanges, Class 2500	55
Table 44. Numbers for ring-joint gaskets and grooves	56
Table 45. Length of alloy steel stud bolts for flanges, Class 150	57
Table 46. Length of alloy steel stud bolts for flanges, Class 300	58
Table 47. Length of alloy steel stud bolts for flanges, Class 400	59
Table 48. Length of alloy steel stud bolts for flanges, Class 600	60
Table 49. Length of alloy steel stud bolts for flanges, Class 900	61
Table 50. Length of alloy steel stud bolts for flanges, Class 1500	62
Table 51. Length of alloy steel stud bolts for flanges, Class 2500	63
Table 52. Length of carbon steel bolts for flanges, Class 150	64
Table 53. Dimensions of bolt heads and nuts	65
Appendix A. Materials	
Table 54. Materials specifications for flanges and flanged fittings	66
Table 55. Bolting material specifications	67
Table 56. Carbon steel nut material specification	68
Appendix B. Pressure-temperature ratings	
Table PE-1. Cast and forged carbon steel flanges and flanged fittings having end flange facings for *other than* ring joints	69
Table PE-2. Cast and forged carbon steel flanges and flanged fittings having end flange facings for ring joints	70
Table PE-3. Cast and forged carbon-molybdenum steel flanges and flanged fittings having end flange facings for *other than* ring joints	71
Table PE-4. Cast and forged carbon-molybdenum steel flanges and flanged fittings having end flange facings for ring joints	72
Table PE-5. Cast 5 and 9 per cent and forged 5 per cent chromium-molybdenum steel flanges and flanged fittings having end flange facings for *other than* ring joints	73
Table PE-6. Cast 5 and 9 per cent and forged 5 per cent chromium-molybdenum steel flanges and flanged fittings having end flange facings for ring joints	74
Appendix C. Marking	
Table 57. Marking of steel pipe flanges and flanged fittings	75
Table 58. Materials designation	76
Appendix D. Dimensions of wrought steel pipe B.S. 1600, 'Wrought steel pipe for the petroleum industry'	77
Appendix E. Threading of pipe	78
Table 59. Additional length of thread for higher pressure classes	78

BRITISH STANDARD FOR

STEEL PIPE FLANGES AND FLANGED FITTINGS

FOR THE PETROLEUM INDUSTRY

FOREWORD

This British Standard is one of a series of standards prepared for equipment for the petroleum industry.

In view of the international character of the petroleum industry, careful consideration was given to American Standard A.S.A. B16e, Steel pipe flanges and flanged fittings, due to its suitability for use in the petroleum industry and the advantage of ensuring interchangeability in practice between equipment produced by American and British manufacturers. Acknowledgment is expressed to the American Petroleum Institute, the American Society for Testing Materials and the American Standards Association for data used.

A British Standard schedule of steels for use in the petroleum industry is in course of preparation and will, it is hoped, be available shortly. Pending the issue of this schedule, this British Standard for pipe flanges and flanged fittings, which is urgently required, indicates the types of steel to be used by reference to existing A.S.T.M. specifications. As soon as the British Standard schedule of steels is issued it is proposed to review this standard and to replace the references to the A.S.T.M. steels by the relevant British Standard steels and to incorporate such other amendments as may be necessary.

For the convenience of users, Appendix E is included to give guidance on the threading of pipe to make it suitable for use with this standard.

SPECIFICATION

SCOPE

1. This British Standard applies to cast and forged steel pipe flanges and flanged fittings for use in the petroleum industry.

Seven classes of flanges and flanged fittings are provided for as follows :—

Class 150	For primary service pressure rating of	p.s.i. 150
Class 300	For primary service pressure rating of	300
Class 400	For primary service pressure rating of	400
Class 600	For primary service pressure rating of	600
Class 900	For primary service pressure rating of	900
Class 1500	For primary service pressure rating of	1500
Class 2500	For primary service pressure rating of	2500

PRESSURE RATINGS AND TESTS

2. The service pressure-temperature ratings and hydraulic body test pressures shall be as given in Appendix B, Tables PE-1 to PE-6.

Table PE-1 gives the service pressure ratings for cast and forged carbon steel flanges and fittings at 50°F. intervals for temperatures from 100°F. to 1000°F. for all services (oil, water, steam, air and gas). These flanges and fittings have standard facings other than ring joints.

Table PE-2 gives the service pressure ratings for cast and forged carbon steel flanges and fittings at 50°F. intervals for temperatures from 100°F. to 1000°F. for all services. These flanges and fittings have ring-joint facings.

Table PE-3 gives the service pressure ratings for cast and forged carbon-molybdenum steel flanges and fittings, at 50°F. intervals for temperatures from 100°F. to 1000°F. for all services. These flanges and fittings have standard facings other than ring joints.

Table PE-4 gives the service pressure ratings for cast and forged carbon-molybdenum steel flanges and fittings, at 50°F. intervals for temperatures from 100°F. to 1100°F. for all services. These flanges and fittings have ring-joint facings.

Table PE-5 gives the service pressure ratings for cast 5 per cent and 9 per cent and forged 5 per cent chromium-molybdenum steel flanges and fittings at 50°F. intervals for temperatures from 100°F. to 1100°F. for all services. These flanges and fittings have standard facings other than ring joints.

Table PE-6 gives the service pressure ratings for cast 5 per cent and 9 per cent and forged 5 per cent chromium-molybdenum steel flanges and fittings at 50°F. intervals for temperatures from 100°F. to 1100°F. for all services. These flanges and fittings have ring-joint facings.

Hydrostatic body test pressures are given in each table.

For details of ring joints see Tables 7, 13, 19, 25, 31, 37, 43 and 44.

SIZE

3. The size of the flanges and fittings in the tables shall be identified by the corresponding 'nominal pipe size.'

MATERIALS

4. The flanges and fittings shall be either steel castings or steel forgings, and the bolting material shall be of steel, as detailed in Appendix A, Tables 54 to 56.

AVA Documents
Document Sharing Hub

a. Steel castings. The dimensions for steel castings are based on a high-grade product equal to that given in Appendix A, Table 54, Column (*a*), suitable for the appropriate primary service pressure-temperature ratings. Carbon steel may be used for pressure-temperature ratings in excess of the primary ratings in accordance with the adjusted ratings given in Appendix B, Tables PE-1 and PE-2.

For pressure-temperature ratings in excess of those given in Appendix B, Tables PE-1 and PE-2, it is recommended that other alloy steels described in Appendix A, Table 54, Columns (*f*), (*h*) and (*j*), be used. Ratings for carbon-molybdenum steels are given in Appendix B, Tables PE-3 and PE-4 ; ratings for 5 per cent and 9 per cent chromium-molybdenum steel are given in Appendix B, Tables PE-5 and PE-6 ; other alloys having superior characteristics may be assigned an appropriate allowance.

b. Steel forgings. The dimensions for steel forgings are based on the following materials suitable for the appropriate primary service pressure-temperature ratings :—

For Classes 150 and 300—in accordance with Appendix A, Table 54, Columns (*b*) and (*c*) ; for Classes 400 to 2500—in accordance with Appendix A, Table 54, Columns (*d*) and (*e*). Carbon steel may be used for pressure-temperature ratings in excess of the primary ratings, in accordance with the adjusted ratings given in Appendix B, Tables PE-1 and PE-2.

For pressure-temperature ratings in excess of those given in Appendix B, Tables PE-1 and PE-2, it is recommended that alloy steels described in Appendix A, Table 54, Columns (*g*) and (*i*), be used. Ratings for carbon-molybdenum steels are given in Appendix B, Tables PE-3 and PE-4 ; ratings for 5 per cent chromium molybdenum steel are given in Appendix B, Tables PE-5 and PE-6 ; other alloy steels having superior characteristics may be assigned an appropriate allowance.

c. Bolting material. The dimensions for bolting material shown in Tables 45 to 53 are based on a high grade product equal to that given in Appendix A, Table 55, for alloy steel bolting material for high temperature service up to 1100°F. metal temperatures, suitable for the appropriate primary service pressure-temperature ratings. It is recommended that Grade B7 given in Appendix A, Table 55, Column 4, should be used for temperatures of 900°F. and under and Grade B13 or Grade B14 in the same table, Columns 5 and 6, for temperatures over 900°F. and up to 1100°F.

Carbon steel bolts, the material for which conforms to Appendix A, Table 55, Column 3 or equal, may be employed satisfactorily for pressures up to 250 p.s.i. and temperatures up to 450°F. ; for higher pressures and temperatures the bolting material shall conform to that given in Appendix A, Table 55, Columns 4 to 6 for alloy steel bolting material.

Nuts shall be of carbon steel. They shall be made in accordance with Appendix A, Table 56, Class 2, for carbon steel nuts for bolts for high pressure and high temperature service to 1100°F. Alternatively, nuts to Class 2H may be specified where it is considered advisable to provide nuts of greater hardness which will not be so readily damaged if re-used frequently. Nuts cut from bar stock in such a manner that their axes will be parallel to the direction of rolling of the bar are not recommended. Washers for use under nuts shall be of forged or rolled steel.

MINIMUM BODY THICKNESS

5. Upon a final inspection the thickness of bodies of fittings shall at no point be less than that given in Tables 5, 11, 17, 23, 29, 35 and 41.

NOTE. The minimum body thickness shown in the tables is the sum of the retiring thickness and an additional thickness to allow for wear due to corrosive and erosive effects.

The retiring thicknesses are based on an allowable fibre stress of 7000 p.s.i. adding 50 per cent of the thickness thus determined to compensate for the shape of the fitting as shown in the following formula :—

$$T = \frac{PD}{2S} \times 1{\cdot}5$$

where

T = retiring thickness in inches.
P = primary service pressure, in pounds per square inch.
D = outside diameter of pipe, in inches.
S = allowable fibre stress, in pounds per square inch.

FACINGS

See Amdt. No. 1.

6. The raised face shall be the standard facing for fittings and companion flanges. It shall be machined to dimension R given in Table 2, with the following height of raised face :—

Class 150, Class 300 } 1/16 in. on all sizes, included in the minimum flange thickness.

Class 400, Class 600, Class 900, Class 1500, Class 2500 } 1/4 in. on all sizes, added to the minimum flange thickness.

Table 2 also gives dimensions for tongue-groove and male-female types of joints for flanges. The projecting contact surfaces, *i.e.*, the tongues and males, shall project, as described above, 1/4 in. beyond the plane of the edge of the flange. The bottom or contact surfaces of the groove and female facings shall be in the same plane as the edge of the flange, and the depth of groove and female shall be 3/16 in. A tolerance of ± 1/64 in. shall be allowable both on heights of tongues and males and on depths of grooves and females, but the application of this tolerance shall not affect the minimum flange thickness or the overall fitting dimensions specified in Clause 11.

The outside diameters of the raised face, lapped, large tongue, and large male shall be the same, being the minimum diameter considered practical for the lapped type of joint. The outside diameters of groove and female shall be 1/16 in. larger than the corresponding outside diameters of tongue and male, and the inside diameters of the groove shall be 1/16 in. smaller than the corresponding inside diameters of the tongue.

A tolerance of ± 1/64 in. shall be allowed on the inside and outside diameters of all facings (see Table 2 for dimensions).

The 1/16 in. raised faces if applied to flanges, Classes 400, 600, 900, 1500 and 2500, shall not be cut from the minimum flange thicknesses specified in the respective tables, but shall be in addition to the full minimum flange thickness.

Raised faces higher than 1/16 in. and tongue-groove and male-female faces may be specially required for flanges, Classes 150 and 300, and when so required shall be provided as follows :—

a. no metal shall be cut from the minimum flange thickness specified in the tables;
b. the raised face, tongue or male, shall be in addition to the full minimum flange thickness;
c. in the case of groove and female faces, the flange shall be built to full minimum thickness and sufficient metal added thereto so that the bottom or contact face of the groove or female is in the same plane as the edge of a full minimum thickness flange.

RING-JOINT FACINGS

7. The dimensions of ring-joint facings shall be those shown in Tables 7, 13, 19, 29, 31, 37 and 43.

NOTE 1. The dimensions used for ring-and-groove joint facings were developed by a committee of the American Petroleum Institute. The dimensions and ring numbers incorporated in this standard are identical with the corresponding figures given in A.P.I. Std. No. 6-B.

NOTE 2. The increased ratings established for fittings having this type of facing have been based upon test results conducted on ring-joints as well as on information obtained under actual operating conditions in both high-pressure and high-temperature oil service. These tests have demonstrated that a higher pressure can be maintained with the same total bolt stress than is possible with the flat gasket type of joint.

NOTE 3. The dimension for the depth of groove is added to the basic flange thickness which makes it necessary to include separate tables of dimensions for fittings having the ring-joint facing.

RINGS FOR RING JOINTS

8. Rings for ring joints shall be of a material suitable for the service conditions encountered. It is recommended that the rings should be of a material softer than the flanges or fittings so that tight joints will be secured when the rings are replaced or renewed.

BOLTING

9. *a. Drilling.* In order that the fittings may be made to face in any quarter, drilling templates shall be in multiples of four. The bolt holes shall straddle the centre lines.

The bolt holes shall be drilled as follows :—

For bolts up to and including 5/8 in.	nominal size of bolt + 1/16 in.
For bolts over 5/8 in. up to and including 1 3/4 in.	nominal size of bolt + 1/8 in.
For bolts over 1 3/4 in.	nominal size of bolt + 1/4 in.

See Amdt. No. 1

b. Dimensions. Alloy steel stud bolts shall be threaded full length with continuous threads, or as specified by the purchaser, and fitted with two nuts conforming to the dimensions and tolerances shown in Table 53.

The lengths of stud bolts are shown in Tables 45-51.

Carbon steel bolts shall have hexagon heads and nuts in accordance with Table 53. The lengths of bolts are shown in Table 52.

c. Threads. All carbon steel and alloy steel bolts, stud bolts and corresponding nuts shall be threaded with Whitworth screw threads, in accordance with B.S. 84,* medium fit, Tables 4 and 5, for sizes up to and including 1 in. diameter, and in accordance with B.S. 84,* medium fit, Table 24a (with 8 t.p.i.) for sizes 1 1/8 in. diameter and over.

d. Working stresses. For end flanges, full dimensions for bolting are given in the tables of this standard. For flanges other than end flanges, e.g. valve bonnet flanges, clean-out flanges, the allowable working fibre stress in bolting material, considering internal allowable working pressure only, based on the primary service pressure ratings given in Appendix B, Tables PE-1 to PE-6, shall not exceed 9000 p.s.i. assuming the pressure to act upon an area circumscribed by the periphery of the outside of the contact surface.

SPOT FACING

10. Flanged fittings and flanged valves shall be spot faced or back faced parallel to the flanged face. Metal removed in spot facing or back facing shall not reduce the thickness of the flange below the minimum given in the tables. Flanges 18 in. and smaller shall be spot faced or back faced to the specified thickness of the flange (minimum) with a plus tolerance of 1/8 in. ; flanges over 18 in. shall have a plus tolerance of 3/16 in.

When spot facing cuts into the fillet, the diameter of the spots faced shall not exceed the maximum nut diameter by more than 3/16 in. for bolts up to and including 1 3/4 in., and 1/4 in. for bolts over 1 3/4 in. The fillet between the body and the back face of each flange shall approximate closely to an arc of a circle having a generous radius. Back facing of any flanges, when used, shall not reduce the radius of this fillet or introduce any marked discontinuities either in the machine tool finish or at the juncture of the finished and as-forged or as-cast surfaces.

See Amdt. No. 1

Forged steel flanges need not be spot faced if the back of the flange is parallel to the face, provided that, after being faced on the contact side, they are not oversize by more than the following :—18 in. and smaller—1/8 in. ; over 18 in.—3/16 in.

FITTINGS DIMENSIONS

NOTE. One of the principles of design in this standard is the maintenance of a fixed position for the flange itself with reference to the body of the fitting, and the addition of any facing is beyond the plane of the outside edge of the flange, except for the 1/16 in. raised face in flanges Classes 150 and 300 (see Note 1 in Table 2).

11. A tolerance of ± 1/32 in. shall be allowed on all centre-to-contact-surface dimensions for sizes up to and including 10 in., and ± 1/16 in. on sizes over 10 in. A tolerance of ± 1/16 in. shall be allowed on all contact-surface-to-contact-surface dimensions for sizes up to and including 10 in., and ± 1/8 in. on sizes over 10 in.

LATERALS

12. 45° laterals of the larger sizes may require additional reinforcement to compensate for the inherent weakness in this shape of casting.

* B.S. 84 'Screw threads of Whitworth form.'

AVA Documents
Document Sharing Hub

REDUCING FITTINGS

13. Reducing fittings shall have the same centre-to-flange-edge dimensions as those of equal fittings of the larger opening.

SIDE OUTLET FITTINGS

14. Side outlet fittings shall have all openings on the intersecting centre lines.

THREADING OF SCREWED FLANGES

15. For sizes up to and including 20 in. the flanges shall be threaded and gauged in accordance with API Std. 6-A and in sizes over 20 in. shall be threaded and gauged in accordance with ASA B2.1. Flanges, Classes 150, 300 and 400, shall have threads of sufficient length to take line pipe thread in accordance with API Std. 5-L. Flanges, Classes 600, 900, 1500 and 2500, shall have thread lengths longer than those used for the lower pressures, in order to satisfy the general requirements for longer threads for the heavier pressures (see also Appendix E).

BORE OF FLANGES

16. The following tolerances shall be allowed on the bores of lapped and slip-on flanges, and on the counterbore of screwed flanges :—

for sizes up to and including 10 in.	— 0 in. + 1/32 in.
for sizes 12 in. and over	— 0 in. + 1/16 in.

Reducing screwed flanges, Class 150, shall have no counterbore. Flanges of Classes 300 and higher shall have a depth of counterbore as follows :—

for tappings 2 in. and smaller	1/4 in.
for tappings 2½ in. and over	3/8 in.

The diameter of the counterbore shall be the same as for the corresponding screwed flanges.

NOTE. Lapped flanges shall swivel on the pipe. Slip-on flanges shall be as close a fit on commercial pipe as is practicable on account of welding. For screwed flanges with counterbore the clearance shall allow for variations in the outside diameter of the pipe in relation to the pipe threads.

BLANK OR BLIND FLANGES

17. Blank or blind flanges shall be dimensioned as shown in Tables 3, 9, 15, 21, 27, 33 and 39. They shall conform to the materials specifications established for companion flanges and may have a flat back.

When the centre portion of the inside face is depressed, its diameter shall not be greater than the inside diameter of the fitting shown in Tables 5, 11, 17, 23, 29, 35 and 41, for each class respectively.

Blank or blind flanges shall be faced except that :—

a. when the centre of the inside face is raised, it need not be machined over a centre portion of a diameter at least 1 in. smaller than the inside diameter of the fitting given in Tables 5, 11, 17, 23, 29, 35 and 41, for each class respectively.

b. when the centre of the inside face is depressed the depressed centre portion need not be faced.

WELDING NECK FLANGES

18. The facings, spot facings, etc., of welding neck flanges shall conform to the requirements given for other flanges.

The welding end of the hub shall be cylindrical or its outside surface shall have a draft of not more than 6° for forging purposes. The length of this cylindrical portion shall be sufficient to ensure a sound weld. In no case, however, shall this cylindrical portion be less than ¼ in. long.

CONCENTRIC REDUCING SCREWED AND SLIP-ON WELDING FLANGES

19. The dimensions of concentric reducing screwed and slip-on welding flanges shall be in accordance with Table 1.

CONCENTRIC REDUCING WELDING NECK FLANGES

20. The distance from the back face of the flange to the end of the hub, as well as all other hub dimensions, shall agree with the same dimensions for normal flanges of the smaller size. Flange dimensions and drilling templates shall agree with the normal dimensions for the larger size.

TOLERANCES FOR WELDING NECK FLANGES

21. *a. Outside diameter of hub.* The following tolerances shall be allowed on the outside diameter of the hub at the beginning of chamfer :—

For sizes up to and including 5 in.	+ 3/32 in. — 1/32 in.
For sizes 6 in. and over	+ 5/32 in. — 1/32 in.

b. Thickness of hub. The thickness of the hub shall be not less than 87·5 per cent of the nominal wall thickness of the pipe to which the flange is to be attached.

c. Bore. The following tolerances shall be allowed on the bores :—

For sizes up to and including 10 in.	± 1/32 in.
For sizes 12 in. up to and including 18 in.	± 1/16 in.
For sizes over 18 in.	+ ⅛ in. — 1/16 in.

d. Overall length of hub. The following tolerances shall be allowed on the overall length of the hub :—

For sizes up to and including 10 in.	± 1/16 in.
For sizes 12 in. and over	± ⅛ in.

WELDING BEVEL

22. The recommended practice for the detail of welding bevel shall be as follows :—

For wall thicknesses 3/16 in. up to and including ¾ in., 37·5° ± 2·5° straight bevel ; land 1/16 in. ± 1/32 in. (see Fig. 1 (*a*)).

For wall thicknesses over ¾ in., 20° ± 2·5° U-bevel, 3/16 in. radius ; land 1/16 in. ± 1/32 in. (see Fig. 1 (*b*)).

NOTE. The U-form of bevel is not recommended for acetylene welding and may be changed to straight bevel as in Fig. 1 (*a*).

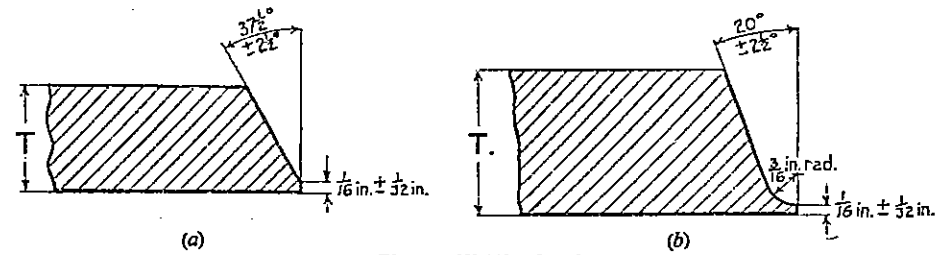

(*a*) (*b*)

Fig. 1. Welding bevel

HYDROSTATIC TEST

23. All fittings shall be subjected to a hydrostatic test at the gauge pressures shown in Appendix B, Tables PE-1 to PE-6, and shall remain tight under this pressure when all ends are blanked.

Hydrostatic tests shall be made with kerosine, water or other liquid medium, and the choice of medium shall be the subject of agreement between the manufacturer and the purchaser.

MARKING

24. Each steel product produced to comply with this British Standard shall be marked in accordance with Appendix C.

INSPECTION

25. The purchaser or his representative shall, for the purpose of inspection, have free access at all reasonable times to those parts of the manufacturer's works actually engaged in the purchaser's contract and shall be at liberty to inspect the manufacture at any stage and to reject any material that does not conform to the terms of this standard

TESTING FACILITIES

26. The manufacturer shall, at his own cost, furnish and prepare the necessary test pieces and supply labour and appliances for such testing as may be carried out on his premises in accordance with this standard. Failing facilities at his own works for making the prescribed tests, the manufacturer shall bear the cost of carrying out the tests elsewhere.

AVA Documents
Document Sharing Hub

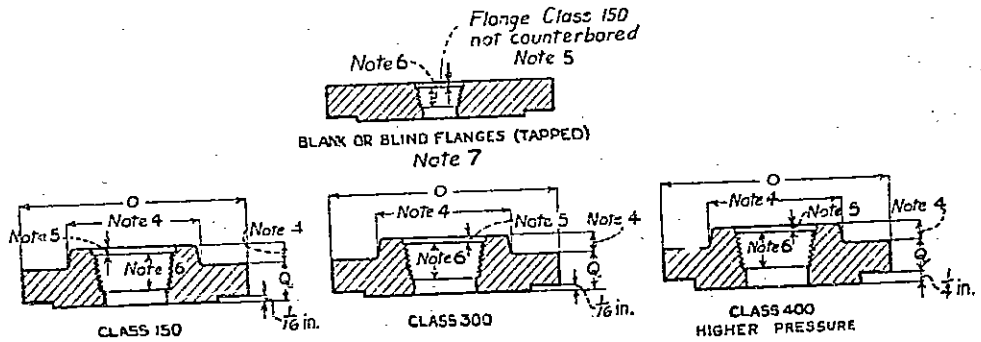

TABLE 1. REDUCING SCREWED AND SLIP-ON WELDING FLANGES, CLASSES 150 TO 2500

Nominal pipe size	Smallest nominal size of reduced outlet for hub flange (see Notes 4 and 7)	Nominal pipe size	Smallest nominal size of reduced outlet for hub flange (see Notes 4 and 7)	Nominal pipe size	Smallest nominal size of reduced outlet for hub flange (see Notes 4 and 7)
in.	in.	in.	in.	in.	in.
1	½	3½	1½	12	3½
1¼	½	4	1½	14	3½
1½	½	5	1½	16	4
2	1	6	2½	18	4
2½	1¼	8	3	20	4
3	1¼	10	3½	24	4

NOTE 1. Reducing flanges are designated by the nominal size of the reduced outlet and the outside diameter of the flange.

NOTE 2. For dimensions not shown, see Tables 3, 9, 15, 21, 27, 33 and 39.

NOTE 3. Screwed flanges shall be threaded in accordance with Clause 15.

NOTE 4. The minimum diameter of the hub and the minimum height of the hub above the flange is the same as for a normal flange one size smaller and this hub is maintained for all other reductions except where blank or blind flanges are used.

NOTE 5. Screwed flanges, Class 150, are not counterbored. Screwed flanges, Classes 300 and higher, have a depth of counterbore of ¼ in. for 2 in. and smaller tappings, and ⅜ in. for 2½ in. and larger tappings. The diameter of counterbore is the same as that given for the corresponding screwed flanges.

NOTE 6. In screwed flanges the minimum length of effective thread is at least equal to dimension 'T' in the relevant table for the corresponding tapping but does not necessarily extend to the face of the flange as in normal flanges.

Example 1 :— 2½ × 12½ in. Reducing screwed flange, Class 300 (see Table 9 for dimensions).

Tapping	2½ in. pipe tap.
O	12½ in. diameter of flange, regularly having 6 in. tapping.
Q	17/16 in. thickness of normal 6 × 12½ in. flange.
X	7 in. diameter hub for 5 in. normal flange.
Y—Q	⅝ in. height of hub for 5 in. normal flange.

NOTE 7. For reduced outlets smaller than those given in Table 1 for the several nominal pipe sizes, blank or blind flanges may be used.

Example 2 :— 2 × 12½ in. Reducing flange, Class 300. Use regular blind or blank flange screwed or bored for 2 in. pipe.

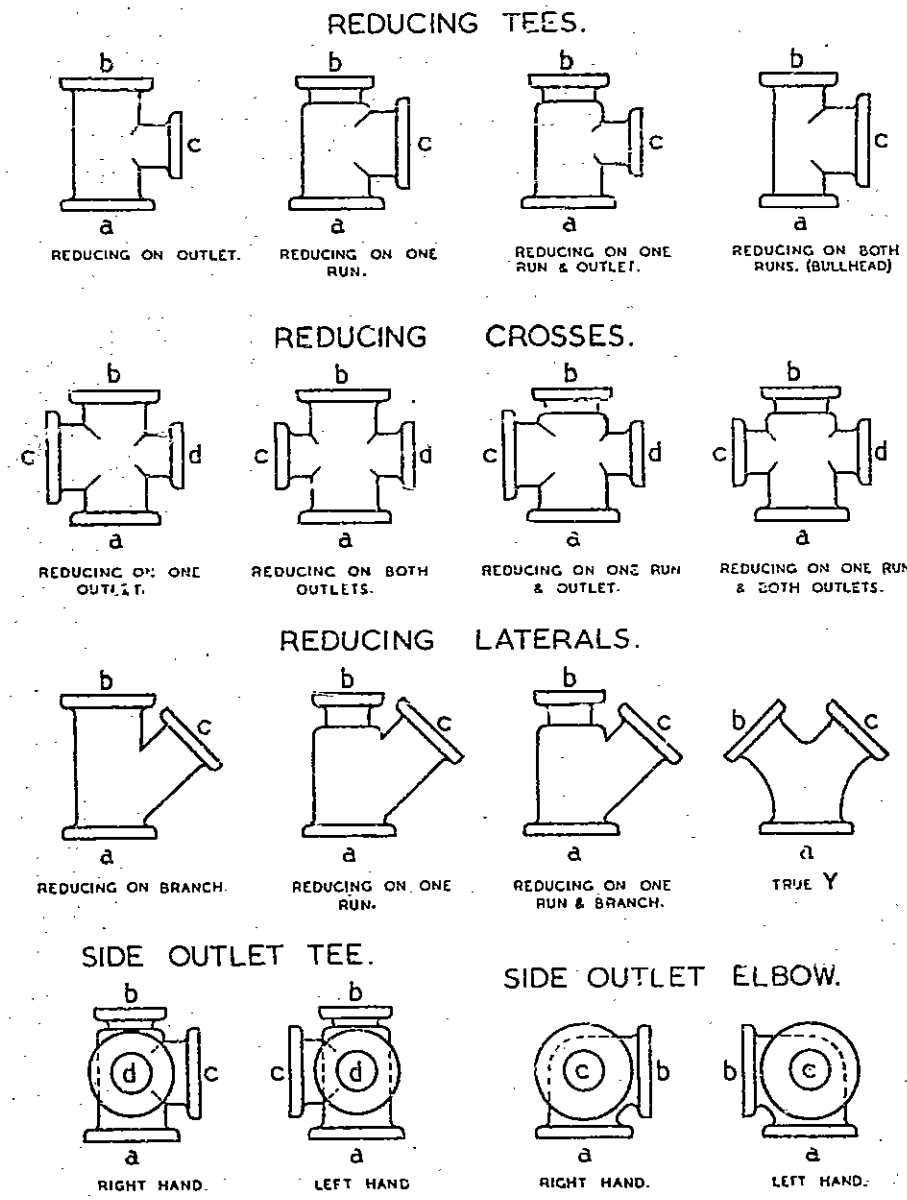

Fig. 2. Method of designating outlets of reducing fittings

NOTE. In designating the outlets of reducing fittings the openings shall be given in alphabetical order as shown.

AVA Documents
Document Sharing Hub

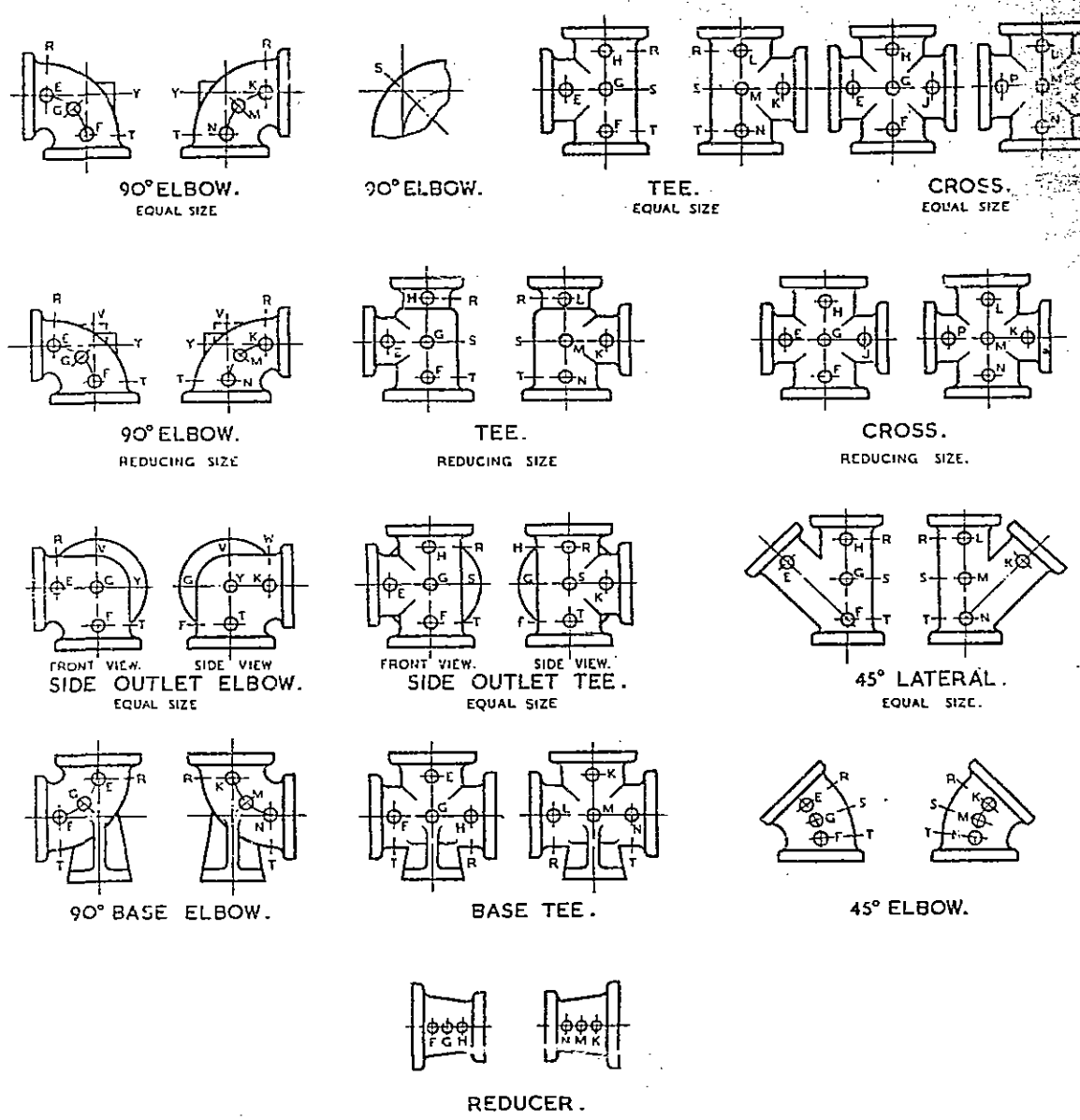

Fig. 3. Method of designating location of tapped holes for drains

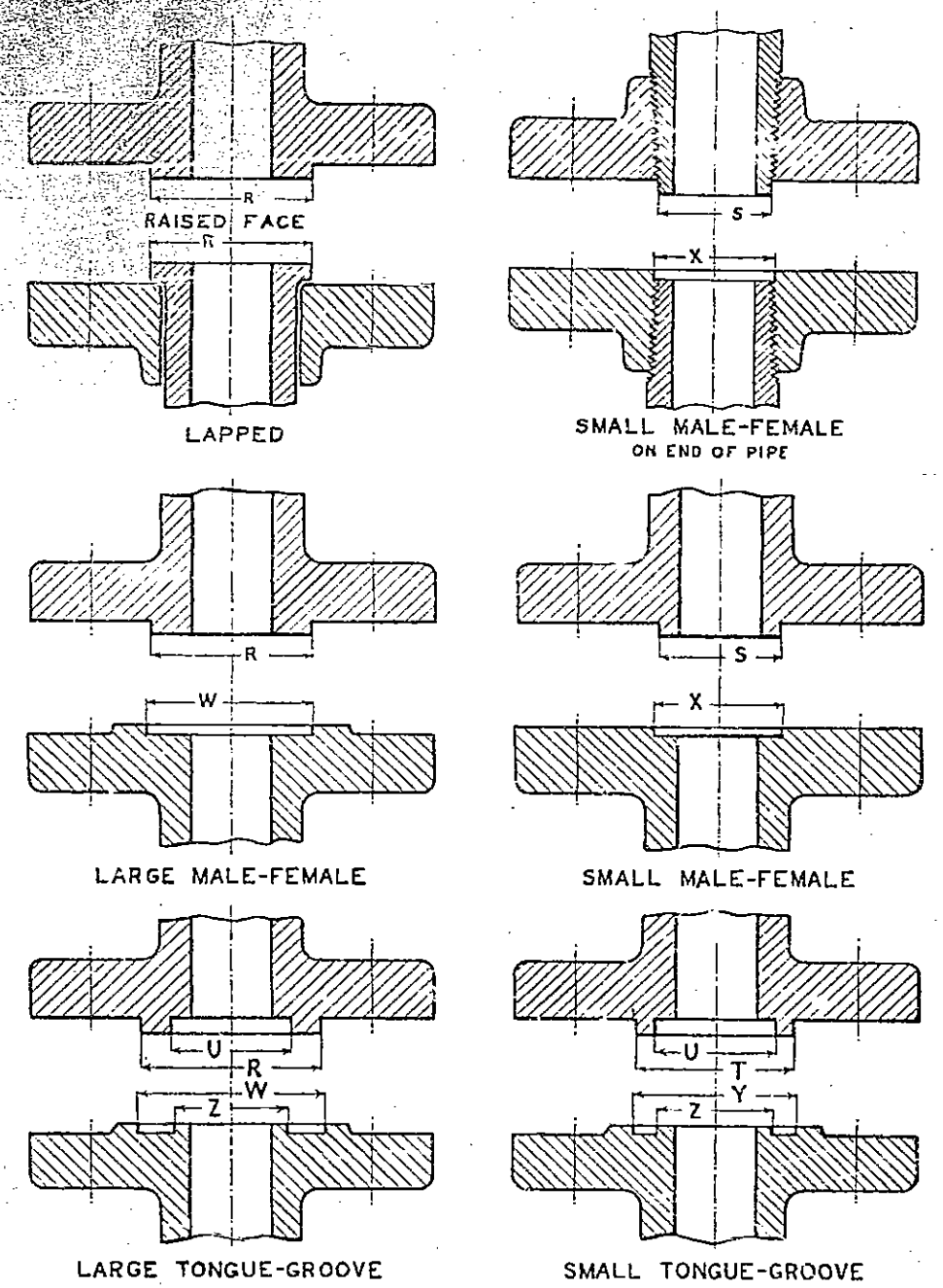

Fig. 4. Typical flange facings (for dimensions see Table 2)

AVA Documents
Document Sharing Hub

TABLE 2. FACING DIMENSIONS FOR FLANGES, CLASSES 150, 300, 400, 600, 900, 1500 AND 2500, OTHER THAN RING-JOINT FACINGS (see Note 1)

(See Fig. 4)

1	2	3	4	5	6	7	8	9	10	11	12
	Outside diameter (see Notes 2 and 3)				Outside diameter (see Notes 3 and 4)				Height (see Note 2)		
Nominal pipe size	Raised face, lapped large male and large tongue R	Small male S	Small tongue T	Internal diameter of large and small tongue (see Notes 3 and 4) U	Large female and large groove W	Small female X	Small groove Y	Internal diameter of large and small groove (see Notes 3 and 4) Z	Raised face, Classes 150 and 300	Raised face, large and small male and tongue, Classes 400, 600, 900, 1500 and 2500	Depth of groove or female
in.	in.	in.	in.	in.	in.	in.	in.	in.	in.	in.	in.
½	1⅜	23/32	1⅜	1	1 7/16	29/32	1 7/16	15/16	1/16	¼	3/16
¾	1 11/16	15/16	1 11/16	1 5/16	1¾	1	1¾	1¼	1/16	¼	3/16
1	2	1 3/16	1⅞	1½	2 1/16	1¼	1 15/16	1 7/16	1/16	¼	3/16
1¼	2½	1½	2¼	1⅞	2 9/16	1 9/16	2 5/16	1 13/16	1/16	¼	3/16
1½	2⅞	1¾	2½	2⅛	2 15/16	1 13/16	2 9/16	2 1/16	1/16	¼	3/16
2	3⅝	2¼	3¼	2⅞	3 11/16	2 5/16	3 5/16	2 13/16	1/16	¼	3/16
2½	4⅛	2 11/16	3¾	3⅜	4 3/16	2¾	3 13/16	3 5/16	1/16	¼	3/16
3	5	3 5/16	4⅝	4¼	5 1/16	3⅜	4 11/16	4 3/16	1/16	¼	3/16
3½	5½	3 15/16	5⅛	4¾	5 9/16	3⅞	5 3/16	4 11/16	1/16	¼	3/16
4	6 3/16	4 5/16	5 11/16	5 3/16	6¼	4⅜	5¾	5⅛	1/16	¼	3/16
5	7 5/16	5⅜	6 13/16	6 3/16	7⅜	5 7/16	6⅞	6¼	1/16	¼	3/16
6	8½	6⅜	8	7½	8 9/16	6 7/16	8 1/16	7 7/16	1/16	¼	3/16
8	10⅝	8⅜	10	9⅜	10 11/16	8 7/16	10 1/16	9 5/16	1/16	¼	3/16
10	12¾	10½	12	11¼	12 15/16	10 9/16	12 1/16	11 3/16	1/16	¼	3/16
12	15	12½	14¼	13½	15 1/16	12 9/16	14 5/16	13 7/16	1/16	¼	3/16
14	16¼	13¾	15½	14¾	16 5/16	13 13/16	15 9/16	14 11/16	1/16	¼	3/16
16	18½	15¾	17⅝	16¾	18 9/16	15 13/16	17 11/16	16 11/16	1/16	¼	3/16
18	21	17¾	20⅛	19¼	21 1/16	17 13/16	20 1/16	19 3/16	1/16	¼	3/16
20	23	19¾	22	21	23 1/16	19 13/16	22 1/16	20 15/16	1/16	¼	3/16
24	27¼	23¾	25¼	25¼	27 5/16	23 13/16	26 5/16	25 3/16	1/16	¼	3/16

NOTE 1. Facing dimensions for ring-joint flanges are given in Tables 7, 13, 19, 25, 31 37 and 43.

NOTE 2. The standard facing for steel flanges and fittings, Classes, 150 and 300, is a 1/16 in. raised face included in the minimum-flange-thickness dimensions given in Tables 3 to 5 and 9 to 11, inclusive. A 1/16 in. raised face may be supplied also on flanges Classes 400, 600, 900, 1500 and 2500, but it shall be added to the minimum-flange-thickness dimension

The standard facing for flanges, Classes 400, 600, 900, 1500 and 2500, is a ¼ in. raised face not included in the minimum-flange-thickness dimensions.

NOTE 3. A tolerance of ± 1/64 in. is allowed on the inside and outside diameters of all facings.

NOTE 4. Gaskets for male and female and tongue and groove joints shall cover the bottom of the recess with minimum clearances taking into account the tolerance specified in Note 3.

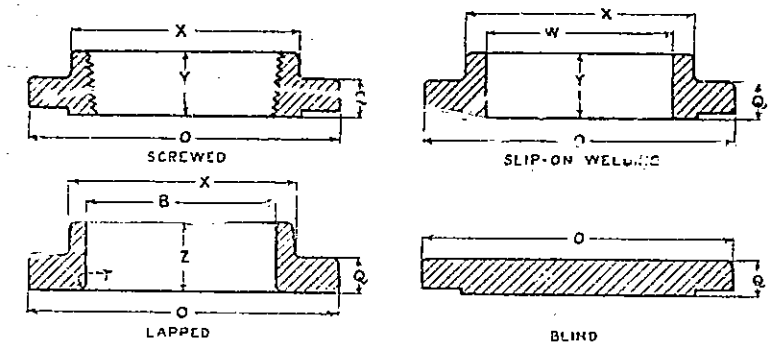

TABLE 3. DIMENSIONS OF FLANGES, CLASS 150

(For pressure-temperature ratings see Appendix B, Tables PE-1 and PE-2)

1	2	3	4	5	6	7	8	9	10	11	12
							Minimum bore (see Note 5)			Length through hub	
Nominal pipe size	Outside diameter of flange O	Minimum thickness of flange (see Notes 3 and 6) Q	Diameter of hub (see Note 4) X	Diameter of bolt circle	Number of bolts	Size of bolts	Slip-on welding flange W	Lapped flange B	Corner radius of bore of lapped flange and pipe r	Screwed and slip on welding (see Note 3) Y	Lapped Z
in.	in.	in.	in.	in.		in.	in.	in.	in.	in.	in.
½	3½	7/16	1 5/16	2⅜	4	½	0·88	0·90	⅛	⅝	⅝
¾	3⅞	½	1½	2¾	4	½	1·09	1·11	⅛	⅝	⅝
1	4¼	9/16	1 15/16	3⅛	4	½	1·38	1·38	⅛	11/16	11/16
1¼	4⅝	⅝	2 5/16	3½	4	½	1·72	1·72	5/16	13/16	13/16
1½	5	11/16	2 9/16	3⅞	4	½	1·97	1·96	¼	⅞	⅞
2	6	¾	3 1/16	4¾	4	⅝	2·44	2·46	5/16	1	1
2½	7	⅞	3 9/16	5½	4	¾	2·94	2·97	5/16	1⅛	1⅛
3	7½	15/16	4¼	6	4	⅞	3·56	3·60	⅜	1 3/16	1 3/16
3½	8½	15/16	4 13/16	7	8	⅞	4·06	4·10	⅜	1¼	1¼
4	9	15/16	5 5/16	7½	8	⅞	4·56	4·60	7/16	1 5/16	1 5/16
5	10	15/16	6 7/16	8½	8	¾	5·66	5·66	7/16	1 7/16	1 7/16
6	11	1	7 9/16	9½	8	¾	6·72	6·72	½	1 9/16	1 9/16
8	13½	1⅛	9 11/16	11¾	8	¾	8·72	8·78	½	1¾	1¾
10	16	1 3/16	12	14¼	12	⅞	10·88	10·91	½	1 15/16	1 15/16
12	19	1¼	14⅜	17	12	⅞	12·88	12·90	½	2 3/16	2 3/16
14	21	1⅜	15¾	18¾	12	1	14·19	14·17	½	2¼	3⅛
16	23½	1 7/16	18	21¼	16	1	16·19	16·19	½	2½	3 7/16
18	25	1 9/16	19⅞	22¾	16	1⅛	18·19	18·19	½	2 11/16	3 13/16
20	27½	1 11/16	22	25	20	1⅛	20·19	20·19	½	2⅞	4 1/16
24	32	1⅞	26⅛	29½	20	1¼	24·19	24·19	½	3¼	4⅜

NOTE 1. For the dimensions of reducing screwed and slip-on welding flanges, see Table 1.

NOTE 2. For lengths of bolts and stud bolts, see Tables 45 and 52.

NOTE 3. The raised face of 1/16 in. is included in minimum-thickness-of-flange and length-through-hub dimensions.

NOTE 4. This dimension is for the large end of the hub, which may be tapered not more than 6° for draft.

NOTE 5. The dimensions given for the bore of the slip-on welding flanges and the bore of the lapped flange are based on the variation of the outside diameter (oversize) of steel pipes given in API Std. 5-L. The tolerances on the bore of these flanges are + 1/32 in. for sizes 10 in. and smaller ; and + 1/16 in. for sizes 12 in. and over.

NOTE 6. The dimensions minimum-thickness-of-flange for loose flanges, sizes 3½ in. and smaller, are slightly heavier than those for the flanges on the fittings which are reinforced by being cast integral with the body of the fitting.

AVA Documents
Document Sharing Hub

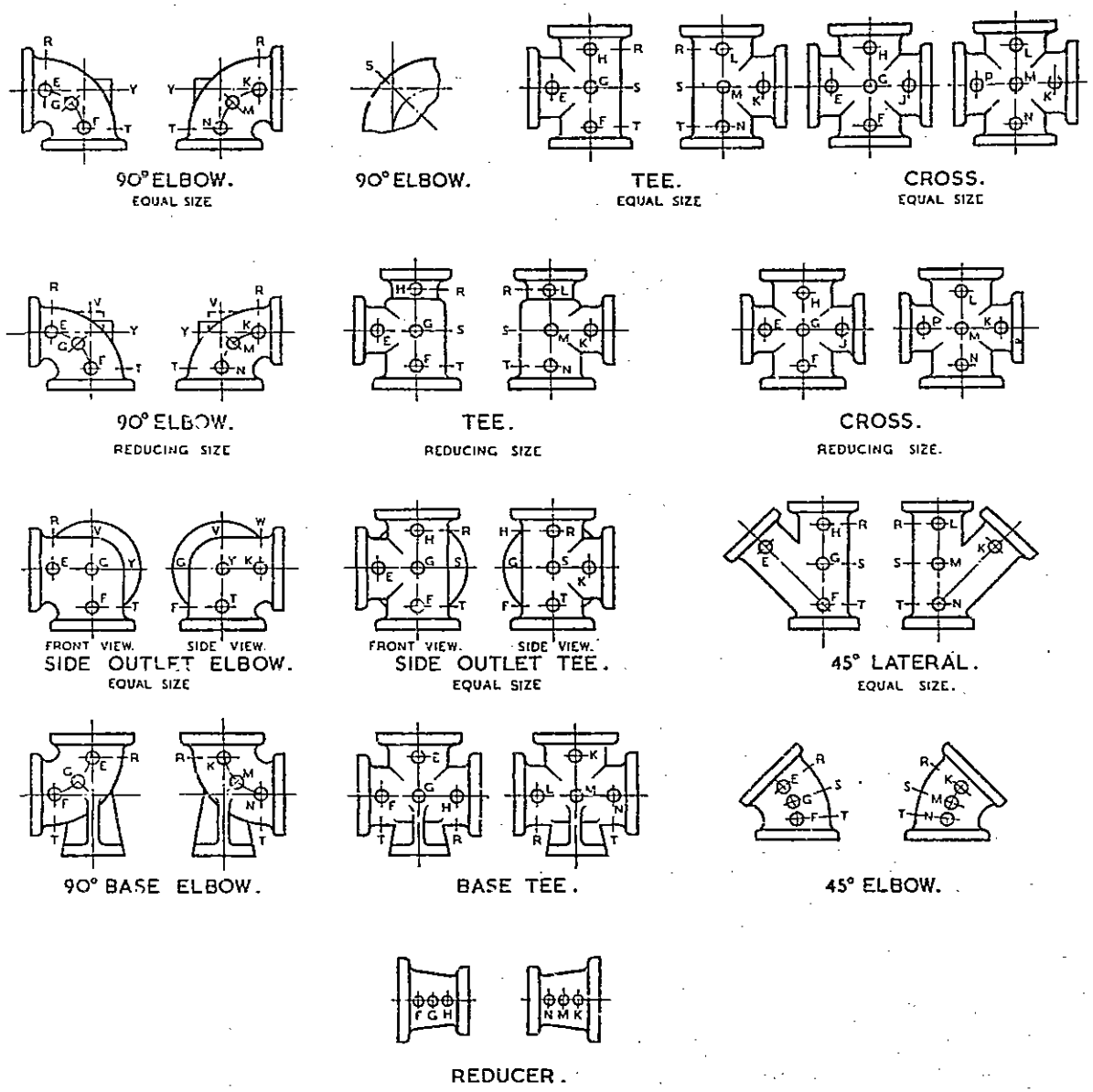

Fig. 3. Method of designating location of tapped holes for drains

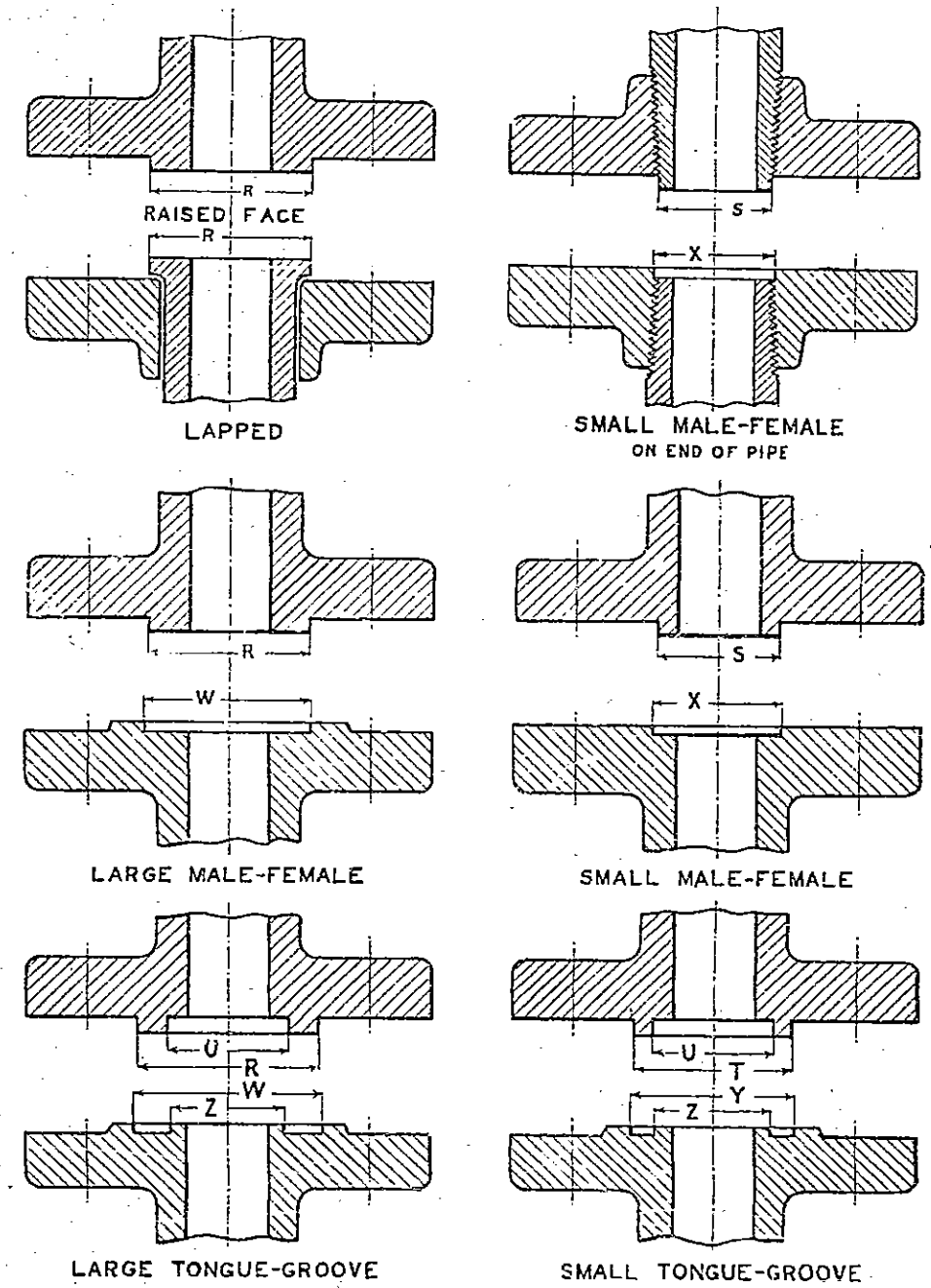

Fig. 4. Typical flange facings (for dimensions see Table 2)

AVA Documents
Document Sharing Hub

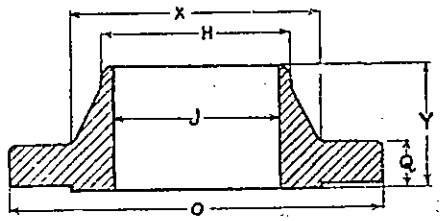

TABLE 4. DIMENSIONS OF WELDING NECK FLANGES, CLASS 150

(For pressure-temperature ratings see Appendix B, Tables PE-1 and PE-2)

1	2	3	4	5	6	7	8	9	10
Nominal pipe size	Diameter of flange	Minimum thickness of flange (see Notes 3 and 7)	Diameter of hub	Hub diameter at beginning of chamfer (see Notes 4, 5 and 6)	Length through hub (see Note 3)	Inside diameter of pipe schedule 40 (see Note 5)	Diameter of bolt circle	Number of bolts	Size of bolts
	O	Q	X	H	Y	J			
in.	in.	in.	in.	in.	in.	in.	in.		in.
½	3½	7/16	1 3/16	0·84	1⅞	0·62	2⅜	4	½
¾	3⅞	½	1½	1·05	2 1/16	0·82	2¾	4	½
1	4¼	9/16	1 15/16	1·32	2 3/16	1·05	3⅛	4	½
1¼	4⅝	⅝	2 5/16	1·66	2¼	1·38	3½	4	½
1½	5	11/16	2 3/16	1·90	2 7/16	1·61	3⅞	4	½
2	6	¾	3 1/16	2·38	2½	2·07	4¾	4	⅝
2½	7	⅞	3 9/16	2·88	2¾	2·47	5½	4	⅝
3	7½	15/16	4¼	3·50	2¾	3·07	6	4	⅝
3½	8½	15/16	4 13/16	4·00	2 13/16	3·55	7	8	⅝
4	9	15/16	5 5/16	4·50	3	4·03	7½	8	⅝
5	10	15/16	6 7/16	5·56	3½	5·05	8½	8	¾
6	11	1	7 9/16	6·63	3½	6·07	9½	8	¾
8	13½	1⅛	9 11/16	8·63	4	To be specified by purchaser	11¾	8	¾
10	16	1 3/16	12	10·75	4		14¼	12	⅞
12	19	1¼	14⅜	12·75	4½		17	12	⅞
14	21	1⅜	15¾	14·00	5		18¾	12	1
16	23½	1 7/16	18	16·00	5		21¼	16	1
18	25	1 9/16	19⅞	18·00	5½		22¾	16	1⅛
20	27½	1 11/16	22	20·00	5 11/16		25	20	1⅛
24	32	1⅞	26⅛	24·00	6		29½	20	1¼

NOTE 1. See also Clause 20, 'Concentric reducing welding neck flanges', and Clause 22, 'Welding bevel'.

NOTE 2. For the lengths of bolts and stud bolts, see Tables 45 and 52.

NOTE 3. The raised face of 1/16 in. is included in minimum-thickness-of-flange and in length-through-hub dimensions.

NOTE 4. The outside surface of the welding end of the hub is straight or tapered not more than 6° for draft.

NOTE 5. Dimensions H and J correspond to the outside and inside diameters of pipe specified in B.S.1600* (equivalent to ASA. B36.10, Schedule 40) and API Std. 5-L.

NOTE 6. See Clause 21, 'Tolerances for welding neck flanges'.

NOTE 7. The dimensions minimum-thickness-of-flange for loose flanges, sizes 3½ in. and smaller, are slightly heavier than those for the flanges on the fittings which are reinforced by being cast integral with the body of the fitting.

* B.S. 1600, 'Wrought steel pipe for the petroleum industry'. (In course of preparation.)

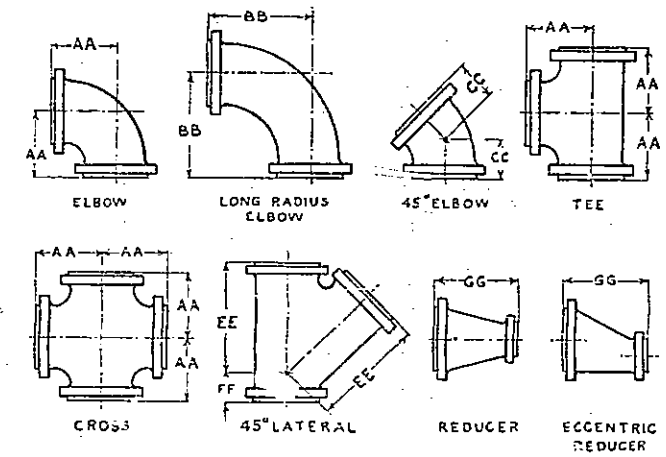

TABLE 5. DIMENSIONS OF FLANGED FITTINGS WITH PROJECTING FACES, CLASS 150

(For pressure-temperature ratings see Appendix B, Table PE-1)

1	2	3	4	5	6	7	8	9	10	11	12	13	14
								1/16 in. raised face (see Notes 3 and 4)					
Nominal pipe size	Inside diameter of fitting	Minimum metal thickness of fitting (see Note 5)	Outside diameter of flange	Minimum thickness of flange (see Note 3)	Diameter of bolt circle	Number of bolts	Size of bolts	Centre to contact surface of elbow, tee and cross AA	Centre to contact surface of long radius elbow BB	Centre to contact surface of 45° elbow CC	Long centre to contact surface of lateral EE	Short centre to contact surface of lateral FF	Contact surface to contact surface of reducer GG
in.	in.	in.	in.	in.	in.		in.	in.	in.	in.	in.	in.	in.
1	1	¼	4¼	7/16	3⅛	4	½	3½	5	1¾	5¾	1¾	—
1¼	1¼	¼	4⅝	½	3½	4	½	3¾	5½	2	6¼	1¾	—
1½	1½	¼	5	9/16	3⅞	4	½	4	6	2¼	7	2	—
2	2	11/32	6	⅝	4¾	4	⅝	4½	6½	2½	8	2½	5
2½	2½	⅜	7	11/16	5½	4	⅝	5	7	3	9½	2½	5½
3	3	13/32	7½	¾	6	4	⅝	5½	7¾	3	10	3	6
3½	3½	7/16	8½	13/16	7	8	¾	6	3½	3½	11½	3	6½
4	4	7/16	9	15/16	7½	8	⅞	6½	9	4	12	3	7
5	5	15/32	10	15/16	8½	8	¾	7½	10¼	4½	13½	3½	8
6	6	15/32	11	1	9½	8	¾	8	11½	5	14½	3½	9
8	8	½	13½	1⅛	11¾	8	¾	9	14	5½	17½	4½	11
10	10	9/16	16	1 3/16	14¼	12	⅞	11	16½	6½	20½	5	12
12	12	⅝	19	1¼	17	12	⅞	12	19	7½	24½	5½	14
14	13¼	21/32	21	1⅜	18¾	12	1	14	21½	7½	27	6	16
16	15¼	11/16	23½	1 7/16	21¼	16	1	15	24	8	30	6½	18
18	17¼	23/32	25	1 9/16	22¾	16	1⅛	16½	26½	8½	32	7	19
20	19¼	¾	27½	1 11/16	25	20	1⅛	18	29	9½	35	8	22
24	23¼	13/16	32	1⅞	29½	20	1¼	22	34	11	40½	9	24

NOTE 1. Tee Y (see Fig. 2). The dimensions of this fitting should be the same as those of the 90° elbow with a back outlet in which the back-outlet-contact-face-to-intersecting-centre-line dimension is the same as dimension FF of the 45° lateral. The contact-face-to-intersecting-centre-line dimension of each Y outlet is the same as dimension AA of the elbow.

NOTE 2. For lengths of bolts and stud bolts, see Tables 45 and 52.

NOTE 3. A raised face of 1/16 in. is provided on the flange of each opening of these fittings and is included in minimum-thickness-of-flange, centre-to-contact-surface, and contact-surface-to-contact-surface dimensions.

Where facings other than the 1/16 in. raised face are used, the difference in height between 1/16 in. and the required facing shall be added to or subtracted from the centre-to-contact-surface dimension shown in Cols. 9 to 14.

NOTE 4. Reducing fittings shall have the same centre-to-contact-surface dimensions as those of equal fittings of the largest opening.

NOTE 5. The minimum metal thicknesses in this column deviate in some cases from those shown in ASA. Std. B.16c, having been increased to provide additional corrosion allowance.

AVA Documents
Document Sharing Hub

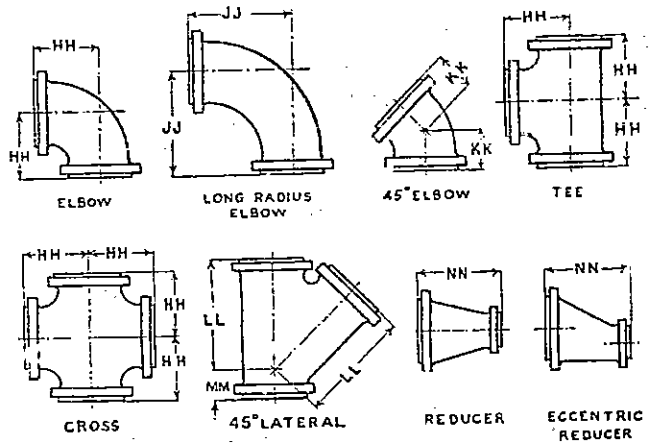

TABLE 6. DIMENSIONS OF FLANGED FITTINGS WITH RING-JOINT FACES, CLASS 150

(For pressure-temperature ratings see Appendix B, Table PE-2)

1	2	3	4	5	6	7
	Ring joint					
Nominal pipe size	Centre to end of elbow, tee and cross (see Note 2) HH	Centre to end of long radius elbow (see Note 2) JJ	Centre to end of 45° elbow (see Note 2) KK	Long centre to end of lateral (see Note 2) LL	Short centre to end of lateral (see Note 2) MM	End to end of reducer NN
in.	in.	in.	in.	in.	in.	
1	3 23/32	5 7/32	1 31/32	5 31/32	1 31/32	
1¼	3 31/32	5 23/32	2 7/32	6 15/32	1 31/32	
1½	4 7/32	6 7/32	2 15/32	7 7/32	2 7/32	
2	4¾	6¾	2¾	8¼	2¾	
2½	5¼	7¼	3¼	9¾	2¾	
3	5¾	8	3¼	10¼	3¼	
3½	6¼	8¾	3¾	11¾	3¼	
4	6¾	9¼	4¼	12¼	3¼	
5	7¾	10½	4¾	13¾	3¾	See Note 3
6	8¼	11¾	5¼	14¾	3¾	
8	9¼	14¼	5¾	17¾	4¾	
10	11¼	16¾	6¾	20¾	5¼	
12	12¼	19¼	7¾	24¾	5¾	
14	14¼	21¾	7¾	27¼	6¼	
16	15¼	24¼	8¼	30¼	6¾	
18	16¾	26¾	8¾	32¾	7¼	
20	18¼	29¼	9¾	35¼	8¼	
24	22¼	34¼	11¼	40¾	9¼	

NOTE 1. True Y (see Fig. 2). The dimensions of this fitting should be the same as those of the 90° elbow with a back outlet in which the back-outlet-contact-face-to-intersecting-centre-line dimension is the same as dimension FF of the 45° lateral. The contact-face-to-intersecting-centre-line dimension of each Y outlet is the same as dimension AA of the elbow.

NOTE 2. For the centre-to-end dimensions of reducing fittings, use centre-to-contact-surface of raised face, Table 5, and add the depth of ring-groove applying to each flange, Table 7.

NOTE 3. For reducers, use contact-surface-to-contact-surface of raised face, Table 5, and add depth of ring-groove applying to each flange, Table 7.

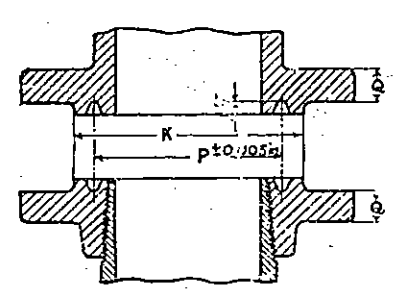

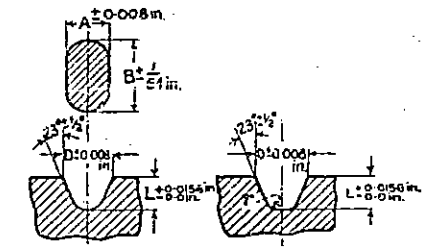

Detail section of ring and groove for oval rings

TABLE 7. FACING DIMENSIONS FOR RING-JOINT FLANGES, CLASS 150

1	2	3	4	5	6	7	8	9
Nominal pipe size	Pitch diameter of ring and groove p	Width of ring A	Height of oval ring B	Width of groove D	Depth of groove (see Note 4) L	Diameter of raised face for ring joint K	Ring numbers	Approximate distance between flanges of ring joints when ring is compressed (see Note 5)
in.	in.	in.	in.	in.	in.	in.		in.
1	1⅞	5/16	9/16	11/32	¼	2½	R.15	5/32
1¼	2¼	5/16	9/16	11/32	¼	2⅞	R.17	5/32
1½	2 9/16	5/16	9/16	11/32	¼	3¼	R.19	5/32
2	3¼	5/16	9/16	11/32	¼	4	R.22	5/32
2½	4	5/16	9/16	11/32	¼	4¾	R.25	5/32
3	4½	5/16	9/16	11/32	¼	5¼	R.29	5/32
3½	5 5/16	5/16	9/16	11/32	¼	6 1/16	R.33	5/32
4	5⅞	5/16	9/16	11/32	¼	6¾	R.36	5/32
5	6¾	5/16	9/16	11/32	¼	7⅝	R.40	5/32
6	7⅝	5/16	9/16	11/32	¼	8⅝	R.43	5/32
8	9¾	5/16	9/16	11/32	¼	10¾	R.48	5/32
10	12	5/16	9/16	11/32	¼	13	R.52	5/32
12	15	5/16	9/16	11/32	¼	16	R.56	5/32
14	15⅝	5/16	9/16	11/32	¼	16¾	R.59	⅛
16	17⅞	5/16	9/16	11/32	¼	19	R.64	⅛
18	20⅜	5/16	9/16	11/32	¼	21½	R.68	⅛
20	22	5/16	9/16	11/32	¼	23½	R.72	⅛
24	26½	5/16	9/16	11/32	¼	28	R.76	⅛

NOTE 1. For dimensions not shown, see Table 3.

NOTE 2. At the option of the manufacturer grooves with flat bottoms may be supplied.

NOTE 3. The corner radius (r) for flat-bottom grooves shall be not more than 1/32 in. for rings 5/16 in. in width.

NOTE 4. The depth of groove is added to the minimum-flange-thickness dimension except that for sizes 1, 1¼ and 1½ in. the groove cuts 1/32 in. into the minimum flange thickness.

NOTE 5. For calculating the laying-length of fittings with ring joints the dimension in Column 9 shall be added.

AVA Documents
Document Sharing Hub

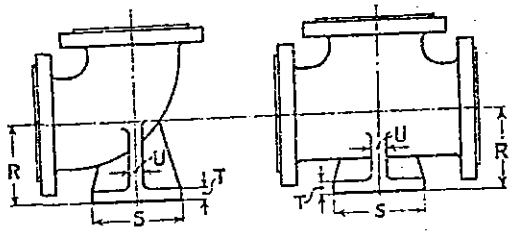

TABLE 8. DIMENSIONS OF FLANGED BASE ELBOWS AND BASE TEES, CLASS 150

(For pressure-temperature ratings see Appendix B, Tables PE-1 and PE-2)

1	2	3	4	5	6	7	8
					Drilling for base (see Note 3)		
Nominal pipe size	Centre to base (see Notes 4 and 5) R	Diameter of round base (see Note 4) S	Thickness of base T	Thickness of ribs U	Diameter of bolt circle	Number of bolts	Size of bolts
in.	in.	in.	in.	in.	in.		in.
2	4⅛	4⅝	½	½	3½	4	½
2½	4½	4⅝	½	½	3½	4	½
3	4⅞	5	9/16	½	3⅞	4	½
3½	5¼	5	9/16	½	3⅞	4	½
4	5½	6	⅝	½	4¾	4	⅝
5	6¼	7	11/16	⅝	5½	4	⅝
6	7	7	11/16	⅝	5½	4	⅝
8	8⅜	9	15/16	⅞	7½	4	⅝
10	9¾	9	15/16	⅞	7½	4	⅝
12	11¼	11	1	1	9½	4	¾
14	12½	11	1	1	9½	4	¾
16	13¾	11	1	1	9½	4	¾
18	15	13½	1⅛	1⅛	11¾	4	¾
20	16	13½	1⅛	1⅛	11¾	4	¾
24	18½	13½	1⅛	1⅛	11¾	4	¾

NOTE 1. For dimensions not shown, see Tables 5 and 6.

NOTE 2. These bases are intended for supports in compression and shall not be used for anchors or supports in tension or shear.

NOTE 3. These drilling dimensions are as given in Table 3 for flanges of corresponding outside diameter, using only four holes in all cases, so placed as to miss the ribs. The bolt holes straddle the centre line.

NOTE 4. In the case of reducing fittings, the centre-to-base and the diameter-of-round-base dimensions shall be determined by the largest opening.

NOTE 5. Bases shall be plain faced unless otherwise specified and the centre-to-base dimension shall be the finished dimension.

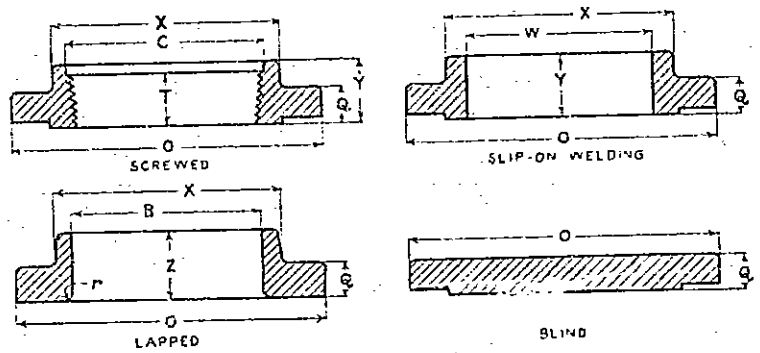

TABLE 9. DIMENSIONS OF FLANGES, CLASS 300

(For pressure-temperature ratings, see Appendix B, Tables PE-1 to PE-6)

1	2	3	4	5	6	7	8	9	10	11	12	13	14
								Minimum bore (see Note 5)			Length through hub		
Nominal pipe size	Outside diameter of flange O	Minimum thickness of flange (see Note 3) Q	Diameter of hub (see Note 4) X	Diameter of bolt circle	Number of bolts	Size of bolts	Minimum counter-bore screwed flange (see Note 5) C	Slip-on welding flange W	Lapped flange B	Corner radius of bore of lapped flange and pipe r	Screwed and slip-on welding (see Note 3) Y	Lapped Z	Thread length (see Note 3) T
in.	in.	in.	in.	in.		in.	in.	in.	in.	in.	in.	in.	in.
½	3¾	9/16	1½	2⅝	4	½	0·93	0·88	0·90	⅛	⅞	⅞	⅝
¾	4⅝	⅝	1⅞	3¼	4	⅝	1·14	1·09	1·11	⅛	1	1	⅝
1	4⅞	11/16	2⅛	3½	4	⅝	1·41	1·38	1·38	⅛	1 1/16	1 1/16	11/16
1¼	5¼	¾	2½	3⅞	4	⅝	1·75	1·72	1·72	3/16	1 1/16	1 1/16	11/16
1½	6⅛	13/16	2¾	4½	4	¾	1·99	1·97	1·96	¼	1 5/16	1 5/16	⅞
2	6½	⅞	3 5/16	5	8	⅝	2·50	2·44	2·46	5/16	1 5/16	1 5/16	1⅛
2½	7½	1	3 15/16	5⅞	8	¾	3·00	2·94	2·97	5/16	1½	1½	1¼
3	8¼	1⅛	4⅝	6⅝	8	¾	3·63	3·56	3·60	⅜	1 11/16	1 11/16	1¼
3½	9	1 3/16	5¼	7¼	8	¾	4·13	4·06	4·10	⅜	1¾	1¾	1 7/16
4	10	1¼	5¾	7⅞	8	¾	4·63	4·56	4·60	7/16	1⅞	1⅞	1 7/16
5	11	1⅜	7	9¼	8	¾	5·69	5·66	5·66	7/16	2	2	1 7/16
6	12½	1 7/16	8⅛	10⅝	12	¾	6·75	6·72	6·72	½	2 1/16	2 1/16	1 13/16
8	15	1⅝	10¼	13	12	⅞	8·75	8·72	8·78	½	2 7/16	2 7/16	2
10	17½	1⅞	12⅝	15¼	16	1	10·88	10·88	10·91	½	2⅝	3¾	2 5/16
12	20½	2	14¾	17¾	16	1⅛	12·94	12·88	12·90	½	2⅞	4	2⅜
14	23	2⅛	16¾	20¼	20	1⅛	14·19	14·19	14·17	½	3	4⅜	2½
16	25½	2¼	19	22½	20	1¼	16·19	16·19	16·19	½	3¼	4¾	2 11/16
18	28	2⅜	21	24¾	24	1¼	18·19	18·19	18·19	½	3½	5⅛	2¾
20	30½	2½	23⅛	27	24	1¼	20·19	20·19	20·19	½	3¾	5½	2⅞
24	36	2¾	27⅝	32	24	1½	24·19	24·19	24·19	½	4 3/16	6	3¼

NOTE 1. For the dimensions of reducing screwed and slip-on welding flanges, see Table 1.

NOTE 2. For the lengths of stud bolts, see Table 46.

NOTE 3. The raised face of 1/16 in. is included in minimum-thickness-of-flange, length-through-hub and thread-length dimensions.

NOTE 4. This dimension is for the large end of the hub, which may be tapered not more than 6° for draft.

NOTE 5. The dimensions given for the counterbore of the screwed flange, the bore of the slip-on welding flanges, and the bore of the lapped flange are based on the variation of the outside diameter (oversize) of steel pipes given in API Std. 5-L. The tolerances on the bore of these flanges are + 1/32 in. for sizes 10 in. and smaller, and + 1/16 in. for sizes 12 in. and over.

AVA Documents
Document Sharing Hub