BRITISH STANDARD

BS 2000 Part 0
Section 0.1:
1999

Methods of test for petroleum and its products —

BS 2000 Part 0: General introduction

Section 0.1: Specifications — IP standard for thermometers

(Identical with IP — Annex A)

Confirmed
January 2010

ICS 75.080

NO COPYING WITHOUT BSI PERMISSION EXCEPT AS PERMITTED BY COPYRIGHT LAW

Documents
Document Sharing Hub

Full document details: BS 2000-0-1:1999

National foreword

This British Standard supersedes BS 2000 Part 0 Section 0.1:1996 which is withdrawn.

The UK participation in its preparation was entrusted to Technical Committee PTI/13, Petroleum testing and terminology, which has the responsibility to:

— aid enquirers to understand the text;

— present to the responsible international/European committee any enquiries on the interpretation, or proposals for change, and keep the UK interests informed;

— monitor related international and European developments and promulgate them in the UK.

A list of organizations represented on this committee can be obtained on request to its secretary.

The Institute of Petroleum publishes and sells all parts of BS 2000, and all BS EN petroleum test methods that would be Part of BS 2000, both in its annual publication "Standard methods for analysis and testing of petroleum and related products and British Standard 2000 Parts" and individually.

Further information is available from:

The Institute of Petroleum, 61 New Cavendish Street, London W1G 7AR. Tel: 020 7467 7100. Fax: 020 7255 1472

Cross-references

The British Standards which implement international or European publications referred to in this document may be found in the BSI Standards Catalogue under the section entitled "International Standards Correspondence Index", or by using the "Find" facility of the BSI Standards Electronic Catalogue.

A British Standard does not purport to include all the necessary provisions of a contract. Users of British Standards are responsible for their correct application.

Compliance with a British Standard does not of itself confer immunity from legal obligations.

This British Standard, having been prepared under the direction of the Sector Policy and Strategy Committee for Materials and Chemicals, was published under the authority of the Standards Policy and Strategy Committee on 03 December 2001

Summary of pages

This document comprises a front cover, an inside front cover, pages 1 to 26, an inside back cover and a back cover

The BSI copyright date displayed in this document indicates when the document was last issued.

Amendments issued since publication

Amd. No.	Date	Comments

© Institute of Petroleum and BSI 03 December 2001

ISBN 0 580 38728 3

Documents
Document Sharing Hub

Full document details: BS 2000-0-1:1999

APPENDIX A

SPECIFICATIONS – IP STANDARD THERMOMETERS

1. INTRODUCTION

These specifications cover glass thermometers required in IP Standards and graduated in Celsius degrees. The thermometers shall conform to the following general requirements and to the detailed specifications listed.

Purchasers should not accept thermometers as complying with these specifications because they are marked with IP markings, as these inscriptions are identification marks and do not necessarily constitute a guarantee. Thermometers with other identification marks may be used provided they conform to all the other requirements of the specification.

Purchasers should satisfy themselves that the permissible scale errors, given in the table of special requirements, have not been exceeded.

It is essential that thermometers be marked with a material resistant to the action of hot petroleum products.

The format of the specification has been changed to conform with that agreed with ASTM in order to facilitate the harmonization of thermometers used in IP and ASTM methods. Thermometers numbered in the form ASTM *x*/IP *y* are those where the details have been agreed and are identical in the IP and ASTM handbooks. Such thermometers continue to be placed in the table according to their IP number. A list of these thermometers appears in Annex B together with thermometers that are comparable but still differ in certain details.

All temperature measurements should be traceable to the International Temperature Scale of 1990 (see Annex A).

2. GENERAL REQUIREMENTS

2.1. *Type* – Mercury-in-glass, solid stem except where otherwise stated. Gas (not air) filled. Top finished plain except in the case of Kin Visc thermometers which shall have a ring or button, Tank thermometers (IP 48C to IP 53C inclusive) when used in conjunction with the armoured case shall be finished with flattened button tops and thermometers ASTM 11C/IP 28C which may have ring or button.

2.2. *Stem* – The stem shall be made of suitable glass tubing with approximate circular section, plain front and enamel back unless otherwise specified.

2.3. *Bulb* – The bulb shall be made of a 'normal' thermometric glass for thermometers with maximum temperatures not exceeding 310°C and of borosilicate glass for higher temperatures.

The type of thermometric glass used shall have been approved by the National Physical Laboratory and selected from those listed in the Table below.

This table gives the identification stripe(s) or approved abbreviations of all glasses that have been approved for the manufacture of thermometer bulbs. At present only Jenaer Glaswerk Schott and Genossen Mainz continue to supply these glasses, however a comprehensive list is retained to assist

Identification stripe(s) or approved abbreviation and normal maximum working temperature of all glasses that have been approved for the manufacture of thermometer bulbs.

Glass	Supplier	Identification stripe(s) or approved abbreviations	Normal maximum working temperature °C
Normal glass Schott-N16	Jenaer Glaswerk Schott & Genossen Mainz	Single red stripe or N16	350
Thermometric glass Schott-2954	Jenaer Glaswerk Schott & Genossen Mainz	Single black stripe	460
Schott-Supremax R 8409	Jenaer Glaswerk Schott & Genossen Mainz	SPX 8409	600
Normal glass	Whitefriars Glass Ltd	Single blue stripe	350
Normal glass, dial	Plowden & Thompson Ltd.	Double blue stripe	350
Normal glass 7560	Corning Glass Co.	CN	350
Corning borosilicate glass	Corning Glass Co.	CB	450
Borosilicate glass	Whitefriars Glass Ltd.	Single white stripe	460

NOTE: The maximum temperatures given in the last column are a guide to normal practice. The performance of a thermometer depends greatly on the stabilizing heat treatment which it has been given during manufacture, and a well made thermometer of 'normal glass' may be quite satisfactory for many purposes at temperatures as high as 400°C. On the other hand, for the best accuracy it may be preferred to use one of the borosilicate glasses for temperatures lower than 350°C. In general the lower the maximum temperature of use in relation to the approved temperature of the glass, the better will be the 'stability of zero' of the thermometer.

AVA Documents Document Sharing Hub

Full document details: BS 2000-0-1:1999

owners of existing or old thermometers in the certification of both the bulb glass and the recommended working temperature ranges.

The glass of the bulb shall preferably be identified by a coloured stripe or stripes. If this identification is not provided, the glass should be identified by an inscription on the thermometer.

2.4. *Expansion and Contraction Chamber* – The following shall be the minimum distances between scale lines and the bulb and between scale lines and enlargements in the bore:

A 13 mm length of unchanged capillary between the bulb and the lowest scale line, if this is not above 100°C; a 30 mm length if the scale line is above 100°C.

A 5 mm length of unchanged capillary between an enlargement and the scale line immediately below, except at the top of the thermometer.

A 10 mm length of unchanged capillary between an enlargement other than the bulb, and the scale line immediately above if this is not above 100°C; a 30 mm length if the scale line is above 100°C.

No contraction chamber shall be above the immersion line or within 10 mm of the immersion line; it shall be of the long narrow type and where no auxiliary scale is present must be so located that the mercury stands in the contraction chamber at 0°C.

A 10 mm length of unchanged capillary above the highest scale line, if there is an expansion chamber at the top of the thermometer; a 30 mm length if there is no expansion chamber. For the purposes of this requirement, 'an expansion chamber' is interpreted as an enlargement at the top end of the capillary bore which shall have a capacity equivalent to not less than 20 mm of unchanged capillary.

2.5. *Scale Marks and Figuring* – The scale lines shall be clearly etched, and of uniform thickness, not exceeding the width given in the table for each thermometer. The lines shall be at right angles to the axis of the thermometer. When the thermometer is viewed from the front and in a vertical position the lines shall all finish on a line parallel to the axis on the left-hand side. The graduation lines shall be so positioned that the enamel backing in the stem provides a background for the mercury column when it is seen just beyond the left- or right-hand end of the short lines.

2.6. *Marking* – Each thermometer shall be marked with the IP or ASTM/IP thermometer type number where applicable, an identification number, and the maker's or vendor's name or trade mark. Some thermometers require special markings which are given in the footnotes to the thermometer specifications. Each thermometer shall also be marked with the immersion at which it is to be used – e.g. 'Total immersion,' '11 cm immersion.' Thermometers intended to be used at partial immersion should have a line etched round the stem to indicate the depth of immersion.

Thermometers intended to be used at 'Total immersion' should be immersed to the reading so that the bulb and liquid index column are at the temperature being measured.

2.7. *Annealing* – Stress in the glass shall be reduced to a level sufficient to minimize the possibility of fracture due to mechanical or thermal shock.

2.8. *Bulb Stability:*

2.8.1. For all thermometers except kinematic viscosity thermometers and thermometers of similar accuracy: During manufacture, thermometers must be subjected to a suitable heat treatment in order to secure bulb stability as shown by the reproducibility of reading at some reference point such as the ice point (0°C).

This treatment shall be such that if the finished thermometer is subjected to the Bulb Stability Test described in 2.9.1, the change in the reference point shall not exceed 0.7 of the allowable scale error and the instrument error shall remain within the maximum error specified.

This Bulb Stability Test is appropriate to thermometers having an upper nominal limit above 100°C.

2.8.2. For kinematic viscosity thermometers and thermometers of similar accuracy: The changes in calibration of kinematic viscosity thermometers, and other thermometers of similar accuracy may become significant within a short period of time after initial calibration requiring a different procedure and criteria for the Bulb Stability Test of these thermometers.

During manufacture, thermometers must be subjected to a suitable heat treatment in order to secure bulb stability as shown by the reproducibility of reading at a reference point on the main scale, and at the ice point (if scale lines at 0°C are available on the thermometer). This treatment shall be such that, if the thermometer is subjected to the stability test described in 2.9.2, there shall be no change in the reading at the selected reference point on the main scale and at the ice point, and hence no change in difference between the corrections obtained at the two calibration temperatures.

In practice, however, measurements are subject to experimental error and, in deciding whether a thermometer complies with the requirement, allowance must be made for possible errors in the test (variously known as 'uncertainty of measurement' or 'limits of accuracy').

Thus, in practice, the maximum permitted observed difference between corrections at each calibration temperature, determined before and after the bulb stability test, is twice the stated uncertainty of measurement during calibration.

This Bulb Stability Test is normally restricted to IP kinematic viscosity thermometers used for measuring temperatures at and above 50°C and is especially applicable to the following:

IP 17C	IP 36C	
IP 32C	IP 66C	
IP 34C	IP 90C	IP 100C
IP 35C	IP 93C	IP 102C

Experience shows that a thermometer which has been calibrated to an uncertainty of ±0.01°C or

AVA Documents
Document Sharing Hub

Full document details: BS 2000-0-1:1999

±0.02°C can reliably measure temperatures to the same accuracy only if due regard is given to all the conditions of use described in Annex D: Notes on Care and Use of Liquid-in-glass Thermometers.

2.9. *Bulb Stability Test:*

2.9.1. For all thermometers except kinematic viscosity thermometers and thermometers of similar accuracy: Heat the thermometer to a temperature equal to its highest reading and keep it at this temperature for 5 min. Allow the thermometer to cool with the test in the test bath or naturally in still air to 20°C above ambient or to 50°C whichever is the lower, and then determine the correction at the selected reference point. If natural cooling is used the correction should be determined within 1 h. Heat the thermometer again to a temperature equal to its highest reading, keep it at this temperature for 24 h, allow the thermometer to cool to one of the two temperatures referred to above at the same rate as the start of the test, and re-determine the correction at the same reference point under the same condition as before. The most commonly used reference point is 0°C and the recommended procedure for standardization at this point is described in 2.10.

2.9.2. For kinematic viscosity thermometers and thermometers of similar accuracy:

(*a*) Heat the thermometer to the selected reference point on the main scale, maintain the temperature for at least 15 min and determine the scale correction at this point.

(*b*) Allow the thermometer to cool slowly in the test bath (or naturally in still air) to at least 20°C above ambient or to 50°C whichever is the lower, and then determine the correction after at least 15 min at the ice point. If natural cooling is used the correction should be determined within 1 h. If there are no scale lines at 0°C then the correction at the ice point cannot be determined but otherwise the procedure must be adhered to.

(*c*) Heat the thermometer again to the selected reference point on the main scale, and keep it at this temperature for 168 h. Allow the thermometer to cool as in (*b*) and then repeat the procedures described in (*a*) and (*b*). It must be emphasized that to obtain meaningful results, the procedure adopted after the 168 h period of heating must be identical to that used in the original calibration.

2.10. *Standardization at the Ice Point* – Select pieces of ice prepared from distilled or de-ionized water. Discard any cloudy or unsound portions. Rinse the ice with distilled or de-ionized water and shave or crush the ice into small pieces, avoiding direct contact with the hands or any chemically unclean objects. Fill a Dewar vessel (or an insulated porcelain container provided with means of draining away excess water) with the prepared ice. Add, while mixing with a chemically clean rod, sufficient distilled or de-ionized, preferably pre-cooled, water to form a slush, but not enough to float the ice. Make a cavity in the ice for the insertion of the thermometer under test by inserting vertically an open-ended glass tube of appropriate diameter. Withdraw a column of the ice-water mixture by closing the top of the tube before lifting it out. To show that the mixture is of the required consistency the column of ice may be released from the glass tube to stand on a flat surface as an unsupported column. Insert the thermometer into the cavity as far as the immersion line at the 0°C graduation, packing the ice gently about the stem to ensure good thermal contact with the bulb. As the ice melts, drain off excess water and gently repack the ice around the bulb and stem. Relieve excess ice pressure on the bulb by rotating the thermometer in the cavity. Read the thermometer by means of a low-powered optical aid, taking care to avoid parallax errors. Leave the thermometer in the ice for at least 10 min before taking the observation.

Except when following the procedure for the Bulb Stability Test described in 2.9.1 or 2.9.2, observations at the ice point should be made after the thermometer has been registering normal ambient room temperature for at least 24 h in order to reduce any error caused by the depression of zero.

2.11. *Verification* – For referee purposes, only thermometers which have been tested at the National Physical Laboratory or other approved testing laboratory shall be used, and the appropriate corrections shall be applied. Satisfactory thermometers should be marked by the testing centre with the year of test and a certificate of corrections issued.

It is desirable that thermometers be re-tested at intervals not exceeding five years. In the case of high-accuracy, finely divided thermometers such as the Kin Visc thermometers, it is desirable to have the zero or a point on the main stem rechecked at more frequent intervals.

Additional information on the care and use of liquid-in-glass thermometers is given in Annex C.

2.12. *Emergent Column Temperatures* – The scale error of IP partial immersion thermometers shall not exceed the specified amount when the temperatures of the emergent column are as stated in the table below. The emergent column temperatures for intermediate temperatures shall be obtained by interpolation from a smooth curve using the points in the table. Since it may not be possible during manufacture and testing to control these emergent column temperatures to the required values, the corrections resulting from the difference between the actual and specified temperatures must be calculated as described below, and allowed for in determining whether or not the thermometer complies with the specification.

The correction to a thermometer reading for an exposed column temperature differing from that obtained during calibration (or, for example, as given on an NPL Certificate) may be calculated by applying to the observed thermometer correction an additional correction obtained by evaluating the expression $KN(t-T)$.

AVA Documents
Document Sharing Hub

Full document details: BS 2000-0-1:1999

where:

K = the differential expansion of the liquid in the particular type of glass used and an average value of 0.00016 may be assumed for mercury-in-glass Celsius thermometers;

N = the length of the exposed column expressed in degrees;

t = the mean temperature of the exposed column during calibration or as given in the NPL Certificate;

T = the mean temperature of the exposed column under conditions of use or as required by the specification.

TABLE. Emergent column temperatures

Temperature	Average temperature of emergent column
IP 1C −38 to +50°C 21°C over entire range	
IP 2C −80 to +20°C 21°C over entire range	
IP 8C 0 to 45°C 15°C over entire range	
IP 9C 40 to 85°C 30°C over entire range	
IP 15C −5 to +110°C	
0°C	19°C
20°C	20°C
40°C	31°C
70°C	40°C
100°C	48°C
IP 16C 90 to 370°C	
100°C	61°C
150°C	65°C
200°C	71°C
250°C	78°C
300°C	87°C
350°C	99°C
IP 17C 32 to 82°C 25°C over entire range	
IP 20C −38 to +42°C	
−35°C	5°C
−20°C	15°C
0°C	20°C
20°C	25°C
40°C	30°C
IP 21C 25 to 105°C	
25°C	25°C
50°C	40°C
75°C	45°C
100°C	45°C
IP 22C 195 to 205°C 40°C over entire range	
IP 28C −6 to 400°C	
0°C	18°C
50°C	34°C
100°C	44°C
150°C	54°C
200°C	64°C
250°C	77°C
300°C	91°C
350°C	108°C
IP 37C 144 to 156°C 40°C over entire range	
IP 40C to 120°C 30°C over entire range	
IP 41C 100 to 230°C 40°C over entire range	
IP 42C −38 to +30°C 15°C over entire range	
IP 43C 10 to 110°C 25°C over entire range	
IP 44C 15 to 121°C 30°C over entire range	
IP 45C 15 to 30°C 20°C over entire range	
IP 59C 90 to 170°C	
100°C	70°C
130°C	60°C
160°C	50°C
IP 62C −5 to +300°C	
0°C	19°C
50°C	35°C
100°C	49°C
150°C	61°C
200°C	70°C
250°C	76°C
300°C	80°C
IP 63C 32 to 127°C 25°C over entire range	
IP 72C −37 to +21°C 21°C over entire range	
IP 73C −5 to 400°C	
0°C	19°C
100°C	50°C
200°C	75°C
300°C	89°C
400°C	94°C
IP 74C −35 to +70°C 21°C over entire range	
IP 75C −30 to +80°C 21°C over entire range	
IP 76C 10 to 55°C 25°C over entire range	
IP 77C −2 to +52°C 25°C over entire range	
IP 78C 24 to 78°C 25°C over entire range	
IP 79C 48 to 102°C 30°C over entire range	
IP 80C 72 to 126°C 30°C over entire range	
IP 81C 98 to 152°C	
100°C	30°C
115°C	33°C
130°C	35°C
150°C	35°C

AVA Documents
Document Sharing Hub

Full document details: BS 2000-0-1:1999

Temperature	Average temperature of emergent column
IP 82C 95 to 255°C	
100°C	30°C
150°C	35°C
200°C	40°C
250°C	45°C
IP 83C 123 to 177°C 35°C over entire range	
IP 84C 148 to 202°C 35°C over entire range	
IP 85C 173 to 227°C	
175°C	34°C
190°C	38°C
205°C	40°C
225°C	40°C
IP 86C 198 to 252°C 40°C over entire range	
IP 87C 223 to 277°C	
225°C	40°C
240°C	40°C
255°C	41°C
275°C	46°C
IP 88C 248 to 302°C 45°C over entire range	
IP 91C 0 to 110°C 30°C over entire range	
IP 98C 100 to 300°C	
100°C	60°C
150°C	65°C
200°C	70°C
250°C	75°C
300°C	80°C
IP 101C 20 to 150°C	
40°C	30°C
70°C	40°C
100°C	50°C
130°C	60°C
150°C	65°C

The emergent column temperature may be estimated preferably by a Faden or thread thermometer of suitable bulb length placed alongside the emergent column or alternatively by taking the mean of a series of auxiliary thermometers placed with the bottom of the bulb of the first of these thermometers at a distance of 1 cm from the point of emergence and the others evenly spaced along the length of the exposed column at intervals not exceeding 10 cm.

Up to a bulb temperature of about 100°C the two methods give results that are in agreement for most practical purposes but above this temperature, the Faden thermometer method is recommended as giving the more reliable and reproducible results. Where possible the same method for estimating the emergent column temperature should be adopted for the thermometer in use as when it was standardized.

SPECIAL NOTE

Existing stocks of thermometers conforming to previous specifications may be used, when appropriate. New thermometers shall conform to the current requirements.

EXPLANATORY NOTES

In the Notes beneath some of the thermometer specifications is a number (e.g. 1976) indicating either the year of original inclusion in the IP Standards for Petroleum and its Products handbook or adoption in the handbook as a joint ASTM/IP specification thermometer. Where no number is stated then there has been no major modification to the thermometer's specification details since 1973.

a–Toluene or other suitable liquid coloured red with a permanent dye shall be used as the activating liquid.

b–An expansion chamber is provided for relief of gas pressure to avoid distortion of the bulb at higher temperatures and it is not for the purpose of joining mercury separations. Under no circumstances should the thermometer be heated above the highest temperature reading.

c–Under certain test conditions, the bulb of the thermometer may be 28°C above the temperature indicated by the thermometer, and at an indicated temperature of 371°C the temperature of the bulb is approaching a critical range if it is made of Normal thermometric glass.

e–The stem shall be made with an enlargement having a diameter (I) of 7.5 to 8.5 mm and a length (J) of 2.5 to 5 mm, the bottom of the enlargement (K) being 64 to 66 mm from the bottom of the bulb. These dimensions shall be measured with the test gauge shown in Fig. 2.

f–Top of contraction chamber to be not more than 41 mm from the bottom of the bulb.

g–Bulb shape ellipsoidal. See Fig. 1.

h–Bulb shape spherical, and a swelling to be provided in the stem to ensure that the thermometer shall be fixed in its brass collar so that the distance from the top of the collar to the bottom of the bulb is 61.00 ± 1.25 mm for the 'oil cup' and 88.90 ± 2.54 mm for the 'water bath' thermometers. The brass collar shall be of the following dimensions: Outside diameter, push fit in socket. Thickness of tube, 22 swg (0.69–0.73 mm). Thickness of flange 2.51–2.56 mm. See also IP 170, Annex B.

i–Top of contraction chamber to be between 100 and 125 mm from the bottom of the bulb (H).

j–The range −0.3°C to +0.3°C is for checking purposes only.

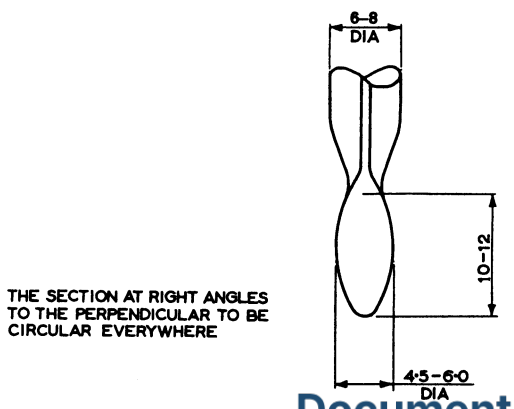

Fig. 1. Bulb of 'congealing point' thermometer.

AVA Documents
Document Sharing Hub

Full document details: BS 2000-0-1:1999

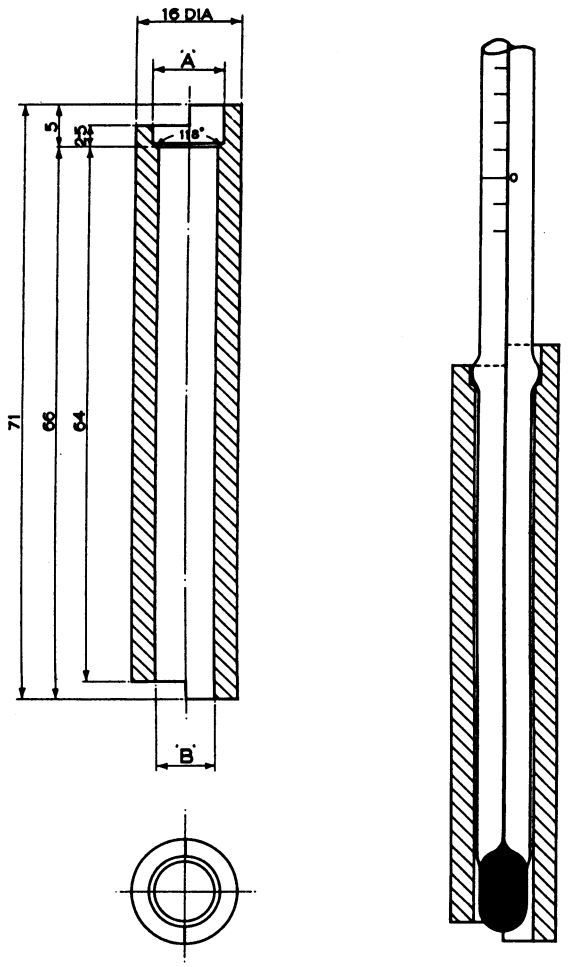

A = 8.5 mm
B = 7.11 to 7.16 mm

Fig. 2. Test gauge for checking enlargement on thermometers IP 15C, 16C, and 101C.

k–Each 0.5°C line to be longer than each 0.1°C line.

l–The contraction chamber to be 80 to 120 mm from the bottom of the bulb.

m–5 to 8 mm stem diameter to be interpreted as 'not go' or 'go' through rings of these dimensions.

n–A metal sleeve shall be permanently attached to the thermometer. The surfaces of the thermometer and of the sleeve shall be roughened or indented to ensure an effective key between the cement and the surfaces. For dimensions and location of sleeve (which shall form an integral part of the thermometer) see IP 31 Section 4(b).

o–The stem immediately above the bulb shall be reduced in diameter to be approx equal to, but not smaller than, that of the bulb over a length of approx 20 mm.

p–A swelling 8 to 10 mm in diameter, the bottom of which shall be 250 ± 2 mm from the bottom of the bulb shall be provided to ensure that the thermometer is used at the correct immersion and to support it in the inner tube of the apparatus.

q–A swelling is to be provided in the stem to ensure that the thermometer shall be fixed in its brass collar so that the distance from the top of the collar to the bottom of the bulb is 61.0 ± 1.3 mm for the IP 43C thermometer and 88.9 ± 2.5 mm for the IP 44C thermometer. The brass collar shall be of the following dimensions: Outside diameter, push fit in socket; thickness of tube, 0.69 ± 0.73 mm. See IP 170, Annex B.

r–Contraction chamber of long narrow shape required. Bottom of bulb to top of contraction chamber (H) 30 mm max.

s–Contraction chamber required. Bottom of bulb to top of contraction chamber (H) 35 mm max. Mercury shall not recede into bulb at 0°C.

t–Contraction chamber required. Bottom of bulb to top of contraction chamber (H) 41 mm max.

u–Bulb bottom shall be essentially hemispherical.

v–A suitable mercury–thallium alloy shall be used as the activating liquid, and the thermometer should be suitably marked to indicate this filling (*e.g.* Hg/Tl).

w–The length of unchanged capillary between the nearest scale mark and contraction chamber shall be not less than 10 mm.

x–The expansion chamber shall be of the long narrow type 10 to 20 mm in length. The length of unchanged capillary between the nearest scale mark and expansion chamber shall not be less than 10 mm.

y–The range −0.6°C to +0.6°C for checking purposes only.

z–Bottom of contraction chamber to bottom of bulb, 290 mm min. Top of contraction chamber to bottom of bulb, 310 mm max.

aa–Contraction chamber required. Bottom of chamber to bottom of bulb, 180 mm min. Top of chamber to bottom of bulb (H) 205 mm max.

bb–A swelling is to be provided in the stem to ensure that the thermometer is fixed in its brass collar with the distance from the top of the collar to the bottom of the bulb 61 ± 1.5 mm–see also IP 170, Annex B. The dimensions of the collar shall be as specified in Method IP 170.

cc–A swelling is to be provided in the stem to ensure that the thermometer is fixed in its brass collar with the distance from the top of the collar to the bottom of the bulb 89 ± 2.5 mm–see also IP 170, Annex B. The dimensions of the collar shall be as specified in method IP 170.

dd–A swelling is to be provided in the stem to ensure that the thermometer shall be fixed in its brass collar so that the distance from the top of the collar to the bottom of the bulb is 93 ± 0.5 mm. The swelling shall be 1.5 mm to 2.0 mm greater than the stem and have a length (J) of 3.0 mm to 5.0 mm. The brass collar shall be of the following dimensions: Internal diameter 7.0 mm, outside diameter below flange to taper from 7.8 mm to 7.9 mm at the top. Length of collar 15 mm. Thickness of flange 3 mm. Diameter of flange 13 mm. The flange is to be provided with a knurled edge.

ee–Contraction chamber required. Top of chamber to bottom of bulb (H), max 35 mm. Mercury to be near bottom of chamber at 0°C.

ff–The thermometer to be numbered for use when viewed horizontally and with the bulb to the right.

gg–Contraction chamber not required, but mercury shall not recede into bulb at 0°C.

AVA Documents
Document Sharing Hub

Full document details: BS 2000-0-1:1999

hh–Where thermometers are required for use with top suspension armoured cases, they must be finished with a flattened button of suitable dimensions. See Petroleum Measurement Manual Part IV paragraph 3.8.2. and Fig. 7(b).

ii–The ranges of angle stem thermometers to be as follows:

IP 54C as for IP 48C
IP 55C as for IP 49C
IP 56C as for IP 50C
IP 57C as for IP 51C
IP 58C as for IP 52C

jj–Contraction chamber of long narrow shape required. Bottom of bulb to top of contraction chamber (H) 60 mm max. Mercury shall be in the chamber at 0°C.

kk–The stem shall be made with an enlargement having a diameter (I) of 8.0 to 10.0 mm, and a length (J) of 4.0 to 7.0 mm, the bottom of the enlargement (K) being 112 to 116 mm from the bottom of the bulb.

ll–The scale lines at the test temperatures of 37.8°C shall be indicated by an arrow or other suitable mark.

mm–The thermometer may be furnished with an optional plain, ring or button top to be included in the total length.

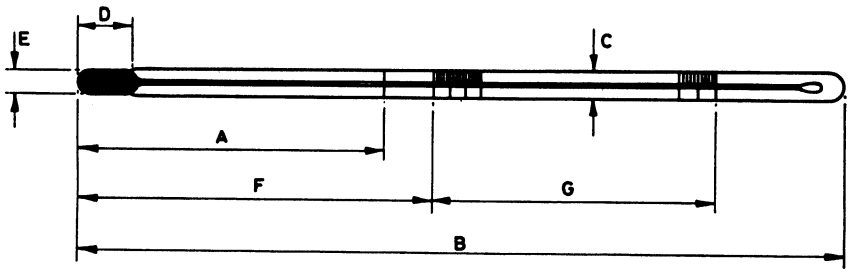

Fig. 3.

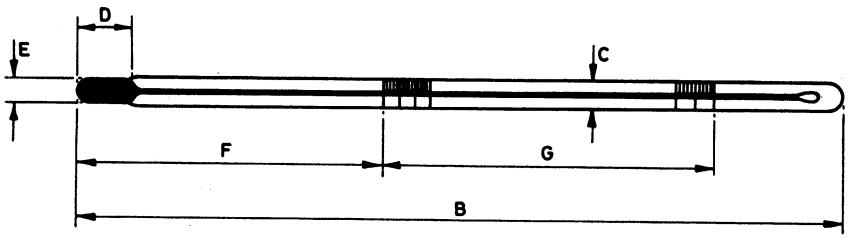

Fig. 4.

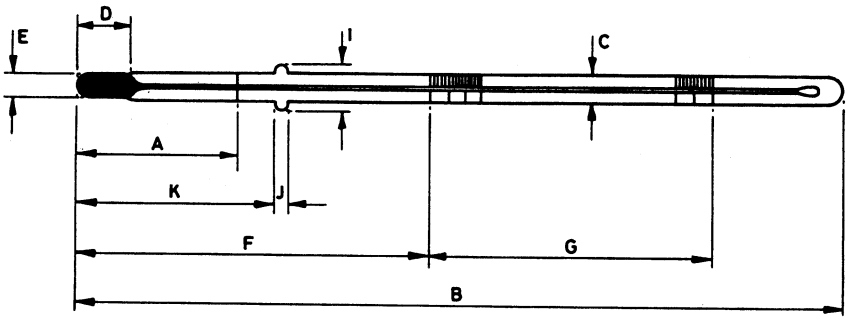

Fig. 5.

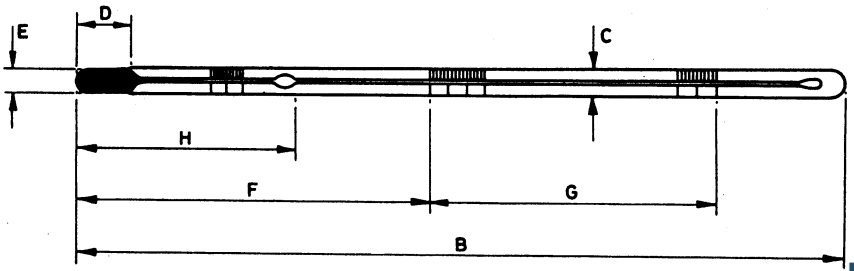

Fig. 6.

AVA Documents
Document Sharing Hub

Full document details: BS 2000-0-1:1999