bsi.

...making excellence a habit.™

Please be aware that this PDF has been created from the original hardcopy document, which might not be in good condition and so the PDF might reflect this.

BSI Group
389 Chiswick High Road
London, W4 4AL
United Kingdom

T: +44 20 845 086 9001
F: +44 20 8996 7400
cservices@bsigroup.com
bsigroup.com

British Standards Limited
Registered in England no: 07864997
Registered address: 389 Chiswick High Road
London, W4 4AL, United Kingdom

AVA Documents
INVESTORS IN PEOPLE
Document Sharing Hub

Full document details: BS 2645-2:1956

Full document details: BS 2645-2:1956

BRITISH STANDARD 2645 : Part 2 : 1956
[UDC 621.791.004.1]

TESTS FOR USE IN THE APPROVAL OF WELDERS

Part 2 : Manual metal-arc and oxy-acetylene welding of mild steel and low alloy steel pipelines and pipe assemblies

BRITISH STANDARDS INSTITUTION

AVA Documents
Document Sharing Hub

Full document details: BS 2645-2:1956

BRITISH STANDARD

TESTS FOR USE IN THE APPROVAL OF WELDERS

Part 2 : Manual metal-arc and oxy-acetylene welding of mild steel and low alloy steel pipelines and pipe assemblies

B.S. 2645 : Part 2 : 1956

Price 12/6 net

BRITISH STANDARDS INSTITUTION
INCORPORATED BY ROYAL CHARTER
BRITISH STANDARDS HOUSE, 2 PARK ST., LONDON, W.1
TELEGRAMS: STANDARDS, LONDON, W.1 TELEPHONE: MAYFAIR 9000

AVA Documents
Document Sharing Hub

THIS BRITISH STANDARD, having been approved by the Welding Industry Standards Committee and endorsed by the Chairman of the Engineering Divisional Council, was published under the authority of the General Council as a British Standard on 10th December, 1956.

The Institution desires to call attention to the fact that this British Standard does not purport to include all the necessary provisions of a contract.

In order to keep abreast of progress in the industries concerned, British Standards are subject to periodical review. Suggestions for improvements will be recorded and in due course brought to the notice of the committees charged with the revision of the standards to which they refer.

A complete list of British Standards, numbering over 4000, indexed and cross-indexed for reference, together with an abstract of each standard, will be found in the Institution's Yearbook.

This standard makes reference to the following British Standards:

B.S. 709. Methods for testing fusion welds, welded joints, and weld metal (applicable to the electric arc welding of steel).
B.S. 1295. Tests for use in the training of welders.
B.S. 1453. Filler rods for gas welding.
B.S. 1719. Classification of covered electrodes for the metal-arc welding of mild steel and of medium-high-tensile steels of welding quality.
B.S. 1821. Class 1 oxy-acetylene welding of steel pipelines and pipe assemblies for carrying fluids.
B.S. 2633. Class 1 metal-arc welding of steel pipelines and pipe assemblies for carrying fluids.

British Standards are revised, when necessary, by the issue either of amendment slips or of revised editions. It is important that users of British Standards should ascertain that they are in possession of the latest amendments or editions.

The following B.S.I. references relate to the work on this standard :—
Committee reference WEE/2. Draft for comment CV (WEE) 6308

AVA Documents
Document Sharing Hub

CONTENTS

	Page
Co-operating organizations	8
Foreword	9
TESTS	
Tests Nos. MA/S 101, MA/S 102, MA/S 103, and MA/S 104. For metal-arc butt welds in mild steel and low alloy steel pipes 14 S.W.G. (0.080 in.) up to and including 5/16 in. thick, and up to and including 5½ in. O/D with backing.	12
Tests Nos. MA/S 105, MA/S 106, MA/S 107, and MA/S 108. For metal-arc butt welds in mild steel and low alloy steel pipes 7 S.W.G. (0.176 in.) up to and including ⅜ in. thick, and of 2⅜ in. up to and including 5½ in. O/D without backing.	16
Tests Nos. MA/S 109, MA/S 110, MA/S 111, and MA/S 112. For metal-arc butt welds in mild steel and low alloy steel pipes 9 S.W.G. (0·144 in.) up to and including 7/16 in. thick, and exceeding 5½ in. O/D with backing.	18
Tests Nos. MA/S 113, MA/S 114, MA/S 115, MA/S 116, and MA/S 117. For metal-arc butt welds in mild steel and low alloy steel pipes 5 S.W.G. (0·212 in.) up to and including 7/16 in. thick, and exceeding 5½ in. O/D without backing.	20

	Page
Tests Nos. MA/S 118, MA/S 119, MA/S 120, MA/S 121, and MA/S 122. For metal-arc butt welds in mild steel and low alloy steel pipes 9/32 in. up to and including ¾ in. thick, and exceeding 5½ in. O/D without backing.	22
Test No. MA/S 123. For metal-arc fillet weld branch joints in mild steel and low alloy steel pipes 14 S.W.G. (0·080 in). up to and including 8 S.W.G. (0·160 in.) thick, and ¾ in. up to and including 2⅜ in. O/D.	24
Tests Nos. MA/S 124, MA/S 125, MA/S 126, and MA/S 127. For metal-arc fillet weld branch joints in mild steel and low alloy steel pipes 14 S.W.G. (0·080 in.) up to and including 5/16 in. thick and exceeding 2⅜ in. O/D.	28
Tests Nos. MA/S 128, MA/S 129, MA/S 130, and MA/S 131. For metal-arc butt weld branch joints in mild steel and low alloy steel pipes 7 S.W.G. (0·176 in.) up to and including ⅜ in. thick, and exceeding 2⅜ in. O/D.	32

Full document details: BS 2645-2:1956
AVA Documents
Document Sharing Hub

		Page
Tests Nos. MA/S 132, MA/S 133, MA/S 134, and MA/S 135.	For metal-arc butt weld set-on branch joints in mild steel and low alloy steel pipes 7 S.W.G. (0·176 in.) up to and including ⅜ in. thick, and exceeding 2⅜ in. O/D, with a hole in the main pipe equal to the bore of the branch pipe.	34
Tests Nos. MA/S 136, MA/S 137, MA/S 138, and MA/S 139.	For metal-arc butt weld sloping branch joints in mild steel and low alloy steel pipes 7 S.W.G. (0·176 in.) up to and including ⅜ in. thick, and exceeding 2⅜ in. O/D.	36
Tests Nos. MA/S 140, MA/S 141, MA/S 142, and MA/S 143.	For metal-arc butt weld sloping set-on branch joints in mild steel and low alloy steel pipes 7 S.W.G. (0·176 in.) up to and including ⅜ in. thick, and exceeding 2⅜ in. O/D, with a hole in the main pipe equal to the bore of the branch pipe.	40
Tests Nos. G/S 101, G/S 102, and G/S 103.	For oxy-acetylene butt welds in mild steel and low alloy steel pipes 14 S.W.G. (0·080 in.) up to and including ⅛ in. thick, and up to and including 4½ in., O/D.	44

		Page
Tests Nos. G/S 104, G/S 105, and G/S 106.	For oxy-acetylene butt welds in mild steel and low alloy steel pipes ⅛ in. up to and including ¼ in. thick, and up to and including 4½ in. O/D.	46
Tests Nos. G/S 107, G/S 108, and G/S 109.	For oxy-acetylene butt welds in mild steel and low alloy steel pipes over ¼ in. and up to and including ½ in. thick, and exceeding 4½ in. O/D.	48
Test No. G/S 110.	For oxy-acetylene fillet weld branch joints in mild steel and low alloy steel pipes 20 S.W.G. (0·080 in.) thick, and up to and including 2⅜ in. pipes O/D.	50
Test No. G/S 111.	For oxy-acetylene fillet weld branch joints in mild steel and low alloy steel pipes 14 S.W.G. (0·080 in.) up to and including 8 S.W.G. (0·160 in.) thick, and of ¾ in. up to and including 2⅜ in. O/D.	52
Tests Nos. G/S 112, G/S 113, and G/S 114.	For oxy-acetylene fillet weld set-on branch joints in mild steel and low alloy steel pipes 14 S.W.G. (0·080 in.) up to and including ⅛ in. thick, and up to and including 2⅜ in. O/D, with a hole in the main pipe equal to the bore of the branch pipe.	54

* Full document details: BS 2645-2:1956
AVA Documents
Document Sharing Hub

Page

Tests Nos. G/S 115, G/S 116, and G/S 117. For oxy-acetylene butt weld set-on branch joints in mild steel and low alloy steel pipes over ⅛ in. thick, and up to and including 4½ in. O/D, with a hole in the main pipe equal to the bore of the branch pipe. 56

Tests Nos. G/S 118, G/S 119, and G/S 120. For oxy-acetylene butt weld set-on sloping branch joints in mild steel and low alloy steel pipes ¼ in. up to and including ½ in. thick, and over 4½ in. O/D, with a hole in the main pipe equal to the bore of the branch pipe. 58

APPENDICES

A. Alternative sizes of electrodes 61

B. Suggested methods of preparing etched specimens 61

C. Method of preparing and testing bend test specimens. 63

CO-OPERATING ORGANIZATIONS

The Welding Industry Standards Committee, under whose supervision this British Standard was prepared, consists of representatives from the following Government departments and scientific and industrial organizations:

*Admiralty
*Aluminium Development Association
Aluminium Industry Council
*Associated Offices Technical Committee
Association of Consulting Engineers (Incorporated)
*British Acetylene Association
*British Constructional Steelwork Association
*British Electrical and Allied Manufacturers' Association
*British Iron and Steel Federation
*British Railways. The British Transport Commission
*British Welding Research Association
Crown Agents for Oversea Governments and administrations
D.S.I.R.—Mechanical Engineering Research Laboratory
*Institute of Welding
*Institution of Civil Engineers
Institution of Electrical Engineers
*Institution of Mechanical Engineers
*Institution of Structural Engineers
*Lloyd's Register of Shipping
Ministry of Labour and National Service (Factory Department)
*Ministry of Supply
Shipbuilding Employers' Federation
Society of British Aircraft Constructors
War Office

The Government departments and scientific and industrial organizations marked with an asterisk in the above list, together with the following, were directly represented on the committee entrusted with the preparation of this British Standard

British Engineers' Association
Engineering and Allied Employers National Federation
Institution of Production Engineers
Ministry of Transport and Civil Aviation
National Physical Laboratory
Individual Firms

Full document details: BS 2645-2:1956
AVA Documents
Document Sharing Hub

BRITISH STANDARD

TESTS FOR USE IN THE APPROVAL OF WELDERS

Part 2 : Manual metal-arc and oxy-acetylene welding of mild steel and low alloy steel pipelines and pipe assemblies

FOREWORD

This British Standard has been prepared to make available a series of standard tests, one or more of which can be selected for assessing the capabilities of a welder. It is complementary to B.S. 1295, 'Tests for use in the training of welders' which details tests to assess the progress of trainees. It does not, however, meet the requirements covered by the following standards :

B.S. 1821. Class I oxy-acetylene welding of steel pipelines and pipe assemblies for carrying fluids.

B.S. 2633. Class I metal-arc welding of steel pipelines and pipe assemblies for carrying fluids.

It is emphasized that the tests cover various thicknesses and dimensions of pipes, normal forms of joints and various welding positions.

The tests are for use in the approval of welders for specific applications to pipe fabrications. They comprise butt welds and fillet weld branch joints in mild steel and low alloy steel pipes for both structural and flow pipe work, and cover both the metal-arc and oxy-acetylene processes. For such fabrications, it is expected that any future British Standards will specify the relevant tests of this Standard when defining the qualifications of the welder for the particular application.

The welding plant and equipment used by the welder for the tests should be in good condition and suitable for the type of work for which the welder is being tested.

In the absence of an application Standard for a particular form of construction, the tests selected should be such as to simulate as closely as possible the types of joints on which the welder will be employed, both as regards the form and position of welding.

The welder who passes certain of the more difficult tests may be assumed to be capable of passing some of the simpler tests. Hence in deciding on the tests to be applied to a particular welder, it will often be found possible to select only those corresponding to the more difficult joints on which he will be employed, thus keeping to a minimum the time and expense of testing.

The welding procedure, pre-heating and post-heating, and the specifications for the electrodes and filler rods to be employed, particularly for the welding of low alloy steels, should be in accordance with the application standards where these exist ; in the absence of such standards they should be stipulated.

NOTE

In this British Standard, the term 'pipe', alone or in combination is used to mean 'pipe' or 'tube', although these terms are often used for different categories of product by different industries.

AVA Documents
Document Sharing Hub

TESTS NOS. MA/S 101, MA/S 102, MA/S 103 AND MA/S 104 FOR METAL-ARC BUTT WELDS IN MILD STEEL AND LOW ALLOY STEEL PIPES 14 S.W.G. (0·080 IN.) UP TO AND INCLUDING 5/16 IN. THICK, AND UP TO AND INCLUDING 5½ IN. O/D WITH BACKING.

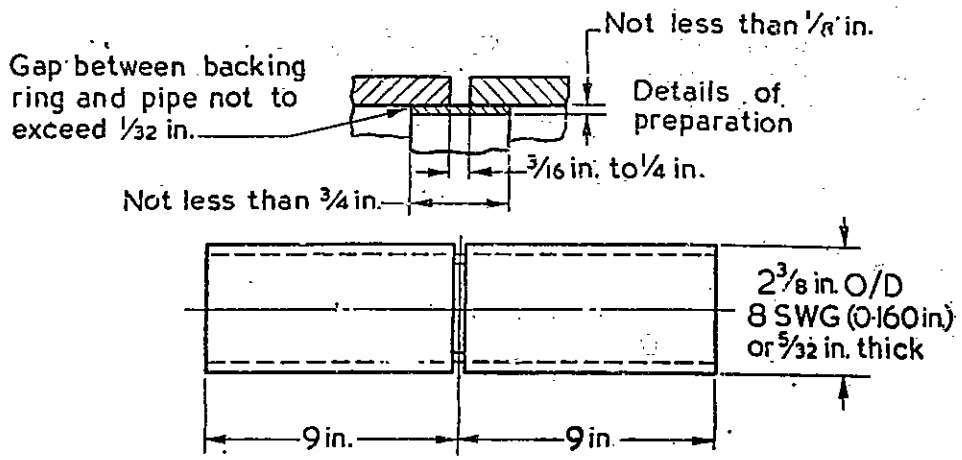

Fig. 1.

Parent metal and backing ring. The parent metal and the material of the backing ring shall be as specified for the application.

Position. The test weld shall be deposited with the pipes in the appropriate position as follows:

Test No. MA/S 101—Pipes horizontal and rolled during welding.
Test No. MA/S 102—Pipes horizontal and not rolled, but turned through 180° during welding.
Test No. MA/S 103—Pipes fixed horizontally (upwards method).
Test No. MA/S 104—Pipes fixed vertically.

Assembly for welding. The test piece shall be made from 8 S.W.G. (0·160 in.) or 5/32 in. thick, 2⅜ in. O/D pipes and shall conform to the requirements of Fig. 1. The joint preparation shall be square with a gap of 3/16 in. to ¼ in. unless otherwise specified.

The ends to be welded shall be prepared by machining or by machine flame cutting using a hand-operated or mechanically-driven machine.

The pipes shall be so aligned that the gap between the backing ring and the bore at any one point does not exceed 1/32 in.

The pipes and backing ring shall be tack welded together or held in suitable jigs. To maintain the root gap, wedge pieces may be used and tack welds may be cut out and wedges removed as welding proceeds.

Electrodes.* The electrode sizes used shall be 10 S.W.G. (0.128 in.) for test No. MA/S 101 and 12 S.W.G. (0·104 in.) for all other tests, unless otherwise specified.

The size and type of electrodes used and their classification (B.S. 1719) shall be recorded.

Deposition of test weld. The test weld shall be deposited as indicated in Fig. 2, (page 14).

Assessment. *a. Visual.* The weld shall be visually examined for the following:

(i) *Shape of profile.* The profile of the weld shall be slightly convex and free from overlap at the toes of the weld.

(ii) *Degree of undercut.* The welded joint shall be free from undercut, but slight intermittent occurrences may be disregarded.

(iii) *Smoothness of join where weld is recommenced.* The joins in the weld runs, where welding has been recommenced, shall be as smooth as practicable, and shall show no pronounced hump or crater in the weld surface.

(iv) *Freedom from surface defects.* The surface of the weld shall be free from porosity, cavities and trapped slag.

b. Bend test. Two bend test specimens ½ in. wide shall be cut from the test piece as indicated in Fig. 2, (page 14) and the backing ring removed by machining. When bent through 180° over a former having a diameter equal to 4 times the thickness of the pipe, each specimen shall show no crack or defect attributable to the welder's workmanship. The methods of preparing and bending the specimen shall be as described in Appendix C. Slight cracking at the ends of the weld metal occurring during bending may be disregarded. One specimen shall be tested with the face, and the other with the root, in tension. A smaller size of former should only be used if specified and the conditions of acceptance will then be as laid down in the appropriate specification.

c. Nick break test. One nick break test specimen shall be cut from the test piece as indicated in Fig. 2, (page 14) notched as indicated in Fig. 3, (page 15) broken open along the weld and the fracture surfaces visually examined for the following :

(i) *Degree of fusion.* Fusion shall be complete over the whole area of the fusion faces, and interfusion of the runs of weld metal shall have been obtained.

(ii) *Quality of weld metal.* The fractures shall have a clean appearance and the weld metal be free from voids, slag inclusions and oxide films.

NOTE. For guidance in the visual examination of welds before and after fracturing see B.S. 1295, 'Tests for use in the training of welders' Schedules 1 and 2.

* See Appendix A.

Full document details: BS 2645-2:1956
AVA Documents
Document Sharing Hub

Documents
Document Sharing Hub

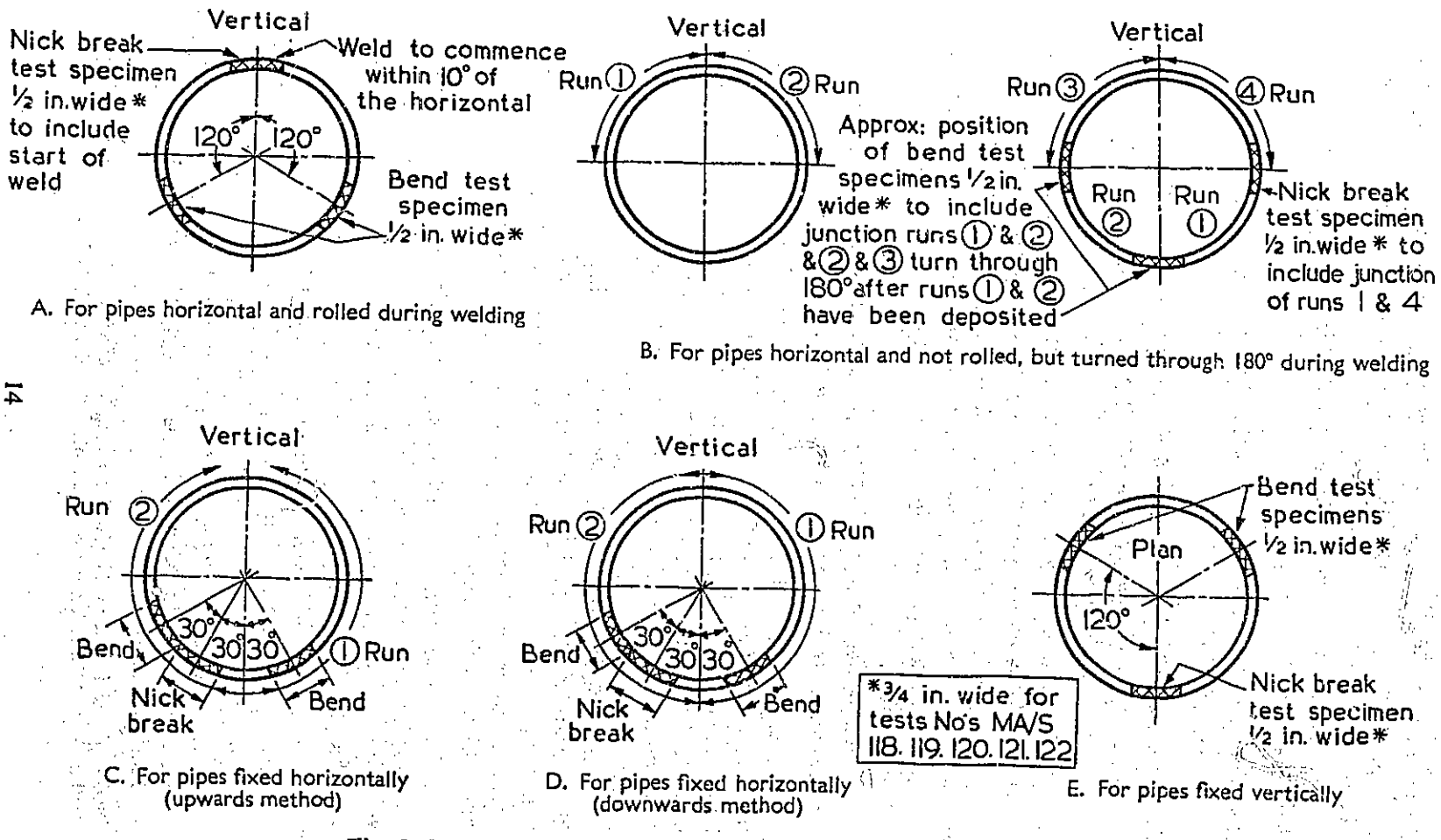

Fig. 2. Welding positions and location of test specimens for butt welds in pipes

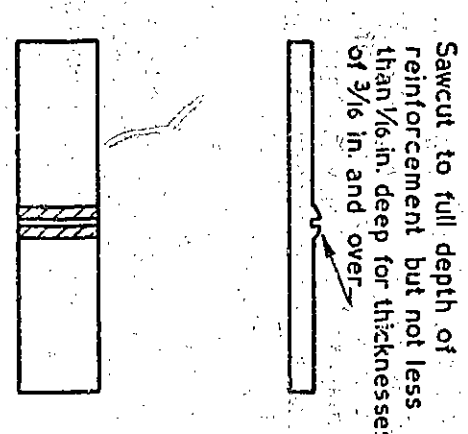

Fig. 3. Nick break test specimen

TESTS NOS. MA/S 105, MA/S 106, MA/S 107, AND MA/S 108

FOR METAL-ARC BUTT WELDS IN MILD STEEL AND LOW ALLOY STEEL PIPES 7 S.W.G. (0·176 IN.) UP TO AND INCLUDING ⅜ IN. THICK, AND OF 2⅜ IN. UP TO AND INCLUDING 5½ IN. O/D WITHOUT BACKING.

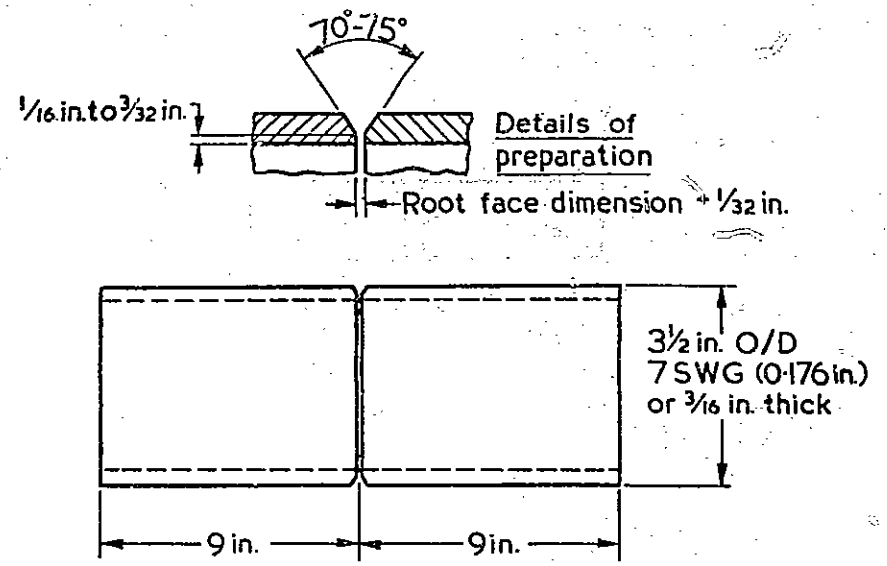

Fig. 4

Parent metal. The parent metal shall be as specified for the application.

Position. The test weld shall be deposited with the pipes in the appropriate positions as follows:

Test No. MA/S 105 Pipes horizontal and rolled during welding.
Test No. MA/S 106—Pipes horizontal and not rolled, but turned through 180° during welding.
Test No. MA/S 107—Pipes fixed horizontally (upwards method).
Test No. MA/S 108—Pipes fixed vertically.

Assembly for welding. The test piece shall be made from 7 S.W.G. (0·176 in.) or 3/16 in. thick, 3½ in. O/D pipes and shall conform to the requirements of Fig. 4. The joint preparation shall be single-V as follows, unless otherwise specified :

Included angle	70°-75°
Root face	1/16 in. to 3/32 in.
Gap	Root face dimension + 1/32 in.

The ends to be welded shall be prepared by machining or by machine flame cutting using a hand-operated or mechanically-driven machine.

The out-of-alignment shall not exceed half the root face dimension.

The pipes shall be tack welded together or held in suitable jigs. To maintain the root gap, wedge pieces may be used and tack welds may be cut out and wedges removed as welding proceeds.

Electrodes.* The electrode sizes used shall be as follows, unless otherwise specified :

Root run 12 S.W.G. (0·104 in.) Other runs 10 S.W.G. (0·128 in.)

The size and type of electrodes used and their classification (B.S. 1719) shall be recorded.

Deposition of test weld. The test weld shall be deposited as indicated in Fig. 2, (page 14).

Assessment. *a. Visual.* The weld shall be visually examined for the following :

(i) *Shape of profile.* The profile of the weld shall be slightly convex and free from overlap at the toes of the weld.

(ii) *Degree of undercut.* The welded joint shall be free from undercut, but slight intermittent occurrences may be disregarded.

(iii) *Smoothness of join where weld is recommenced.* The joins in the weld runs, where welding has been recommenced, shall be as smooth as practicable, and shall show no pronounced hump or crater in the weld surface.

(iv) *Freedom from surface defects.* The surface of the weld shall be free from porosity, cavities and trapped slag.

(v) *Penetration bead.* A slight penetration bead should be present and, in general, the bead shall not protrude into the bore more than ⅛ in. Intermittent occurrences of lack of penetration bead may be disregarded.

b. Bend test. Two bend test specimens ½ in. wide shall be cut from the test piece as indicated in Fig. 2, (page 14). When bent through 180° over a former having a diameter equal to 4 times the thickness of the pipe, each specimen shall show no crack or defect attributable to the welder's workmanship. The methods of preparing and bending the specimen shall be as described in Appendix C. Slight cracking at the ends of the weld metal occurring during bending may be disregarded. One specimen shall be tested with the face, and the other with the root, in tension. A smaller size of former should only be used if specified and the conditions of acceptance will then be as laid down in the appropriate specification.

c. Nick break test. One nick break test specimen shall be cut from the test piece as indicated in Fig. 2, (page 14) notched as indicated in Fig. 3, (page 15) broken open along the weld and the fracture surfaces visually examined for the following :

(i) *Degree of fusion.* Fusion shall be complete over the whole area of the fusion faces, and interfusion of the runs of weld metal shall have been obtained.

(ii) *Quality of weld metal.* The fractures shall have a clean appearance and the weld metal be free from voids, slag inclusions and oxide films.

NOTE. For guidance in the visual examination of welds before and after fracturing see B.S. 1295, 'Tests for use in the training of welders' Schedules 1 and 2.

* See Appendix A.

AVA Documents
Document Sharing Hub