BRITISH STANDARD

BS 4361-13: 1988
ISO 7947:1985

Woodworking machines —

Part 13: Specification for two-, three- and four- side moulding machines

[ISO title: Woodworking machines — Two-, three- and four-side moulding machines — Nomenclature and acceptance conditions]

UDC 674.05:621.914.3

NO COPYING WITHOUT BSI PERMISSION EXCEPT AS PERMITTED BY COPYRIGHT LAW

Document Sharing Hub

Full document details: BS 4361-13:1988

Committees responsible for this British Standard

The preparation of this British Standard was entrusted by the Machine, Engineers and Hand Tools Standards Committee (MTE/-) to Technical Committee MTE/23 upon which the following bodies were represented:

Advanced Manufacturing Technology Research Institute
British Furniture Manufacturers' Federation
British Railways Board
British Woodworking Federation
Department of the Environment, Building Research Establishment (Princes Risborough Laboratory)
Department of Trade and Industry, Mechanical Engineering and Manufacturing Technology Division (Mmt)
Federation of British Hand Tool Manufacturers
Furniture Industry Research Association
Furniture, Timber and Allied Trades Union
Health and Safety Executive
Institute of Machine Wood Working Technology Ltd.
National Sawmilling Association
Saw Association
Timber Research and Development Association
Union of Construction, Allied Trades and Technicians
Woodworking Machinery Suppliers' Association Ltd.

This British Standard, having been prepared under the direction of the Machine, Engineers and Hand Tools Standards Committee, was published under the authority of the Board of BSI and comes into effect on 30 November 1988

© BSI 01-2000

The following BSI references relate to the work on this standard:
Committee reference MTE/23
Draft for comment 83/74266 DC

ISBN 0 580 16771 2

Amendments issued since publication

Amd. No.	Date of issue	Comments

Documents
Document Sharing Hub

Full document details: BS 4361-13:1988

Contents

		Page
Committees responsible		Inside front cover
National foreword		ii
1	Scope and field of application	1
2	Reference	1
3	Preliminary remarks	1
4	Nomenclature	2
5	Acceptance conditions and permissible deviations	5
Annex Equivalent terms		11
Publication referred to		Inside back cover

© BSI 01-2000

Documents
Document Sharing Hub
Full document details: BS 4361-13:1988

National foreword

This Part of BS 4361 has been prepared under the direction of the Machine, Engineers and Hand Tools Standards Committee and implements agreements of the International Organization for Standardization (ISO). It is identical with ISO 7947:1985 "*Woodworking machines — Two-, three- and four-side moulding machines — Nomenclature and acceptance conditions*".

Diagrams. For reasons of simplicity the diagrams in this standard illustrate only one type of machine.

Terminology and conventions. The text of the International Standard has been approved as suitable for publication as a British Standard without deviation. Some terminology and certain conventions are not identical with those used in British Standards; attention is drawn especially to the following.

The comma has been used as a decimal marker. In British Standards it is current practice to use a full point on the baseline as the decimal marker.

Wherever the words "this International Standard" appear, referring to this standard, they should be read as "this Part of BS 4361".

Cross-reference

International Standard	Corresponding British Standard
ISO/R 230[a]	BS 3800:1964 *Methods for testing the accuracy of machine tools* (Technically equivalent)

[a] Now published as ISO 230-1:1986.

A British Standard does not purport to include all the necessary provisions of a contract. Users of British Standards are responsible for their correct application.

Compliance with a British Standard does not of itself confer immunity from legal obligations.

Summary of pages

This document comprises a front cover, an inside front cover, pages i and ii, pages 1 to 14, an inside back cover and a back cover.

This standard has been updated (see copyright date) and may have had amendments incorporated. This will be indicated in the amendment table on the inside front cover.

© BSI 01-2000
Documents
Document Sharing Hub
Full document details: BS 4361-13:1988

1 Scope and field of application

This International Standard specifies the nomenclature appropriate to each part of the machine and, with reference to ISO/R 230, both geometrical and practical tests for two-, three- and four-side moulding machines, and gives the corresponding permissible deviations which apply to machines for general purpose use and normal accuracy.

NOTE In addition to terms used in two of the three official ISO languages (English and French), this International Standard gives in the Annex the equivalent terms in German, Spanish, Italian and Swedish; these have been included at the request of Technical Committee ISO/TC 39 and are published under the responsibility of the member bodies for Germany, F.R. (DIN), Spain (IRANOR), Italy (UNI) and Sweden (SIS). However, only the terms and definitions given in the official languages can be considered as ISO terms and definitions.

This International Standard deals only with the verification of accuracy of the machine. It does not apply to the testing of the running of the machine (vibrations, abnormal noises, stick-slip motion of the components, etc.), nor to its characteristics (speeds, feeds, etc.) which should generally be checked before testing accuracy.

2 Reference

ISO/R 230, *Test code for machine tools.*

3 Preliminary remarks

3.1 In this International Standard all dimensions and permissible deviations are expressed in millimetres.

3.2 To apply this International Standard, reference should be made to ISO/R 230, especially for installation of the machine before testing, the warming up of the main spindle and other moving parts, and description of measuring methods. The measuring instruments shall not permit errors over 1/3 of the checked tolerances.

3.3 The sequence in which the geometrical tests are given is related to the sub-assemblies of the machine and this in no way defines the practical order of testing. In order to make mounting of instruments or gauging easier, tests may be applied in any order.

3.4 When inspecting a machine, it is not always possible or necessary to carry out all the tests given in this International Standard.

3.5 It is up to the user to choose, in agreement with the manufacturer, those tests relating to the properties which are of interest to him, but these tests are to be clearly stated when ordering a machine.

3.6 A movement is longitudinal when it takes place in the working direction of the piece.

3.7 When establishing the tolerance for a measuring range different from that given in this International Standard (see **2.311** in ISO/R 230), it should be taken into consideration that the minimum value of the tolerance is 0,01 mm.

© BSI 01-2000

Documents
Document Sharing Hub
Full document details: BS 4361-13:1988

4 Nomenclature

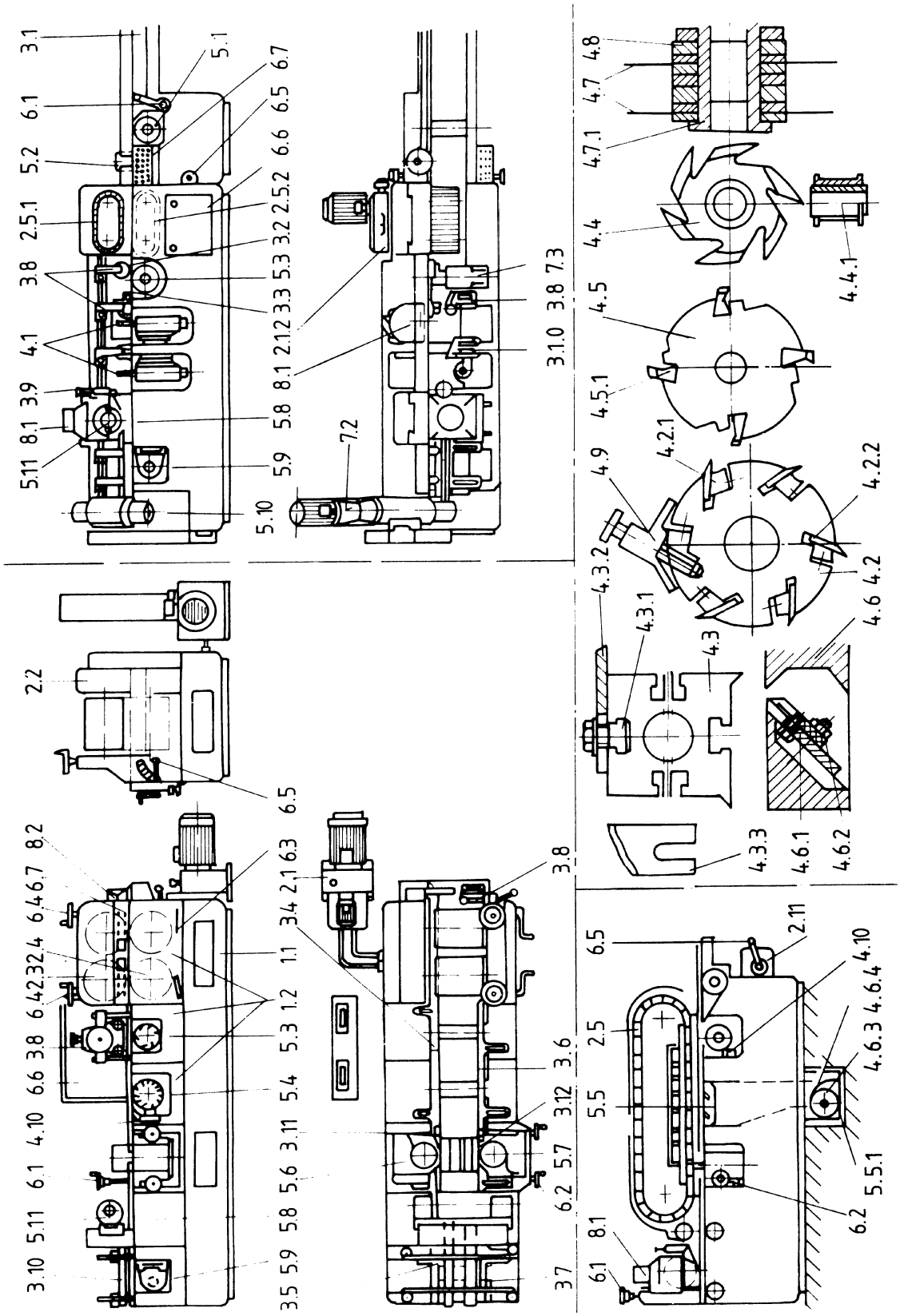

© BSI 01-2000

Documents
Document Sharing Hub
Full document details: BS 4361-13:1988