bsi.

...making excellence a habit.™

Please be aware that this PDF has been created from the original hardcopy document, which might not be in good condition and so the PDF might reflect this.

BSI Group
389 Chiswick High Road
London, W4 4AL
United Kingdom

T: +44 20 845 086 9001
F: +44 20 8996 7400
cservices@bsigroup.com
bsigroup.com

British Standards Limited
Registered in England no: 07864997
Registered address: 389 Chiswick High Road
London, W4 4AL, United Kingdom

AVA Documents
INVESTORS IN PEOPLE
Document Sharing Hub

Full document details: BS 46-2:1929

...ent Departments and Scientific and ...s were represented upon the Committees ...paration of this Specification :—

...ts for the Colonies.
Genera... Post Office.
India Office.
Ministry of Transport.
Office of Works.
War Office.
Department of Scientific and Industrial Research.
Institution of Mechanical Engineers.
Institution of Automobile Engineers.
Institution of Gas Engineers.
Institution of Heating and Ventilating Engineers.
Railway Companies of Great Britain.
Engineering Insurance Companies.
Association of British Chemical Plant Manufacturers.
British Electrical and Allied Manufacturers' Association.
British Engineers' Association.
Locomotive Manufacturers' Association.
Machine Tool Trades Association.
National Federation of Iron and Steel Manufacturers.
Society of Motor Manufacturers and Traders Ltd.

This Specification was adopted by the Mechanical Industry Committee in April 1929, and approved on behalf of the Main Committee on 19th April, 1929.

NOTE.

In order to keep abreast of progress in the Industries concerned, the British Standard Specifications are subjected to periodical review.

Suggestions for improvements, addressed to the Secretary, British Engineering Standards Association, 28, Victoria Street, London, S.W.1, will be welcomed at all times. They will be recorded, and in due course brought to the notice of the Committees charged with the revision of the Specifications to which they refer.

No. 46. Part 2—1929.

...929.

25M

British Engineering Standards Association.

(Incorporated 1918.)

FORMED IN 1901 AS THE ENGINEERING STANDARDS COMMITTEE
BY
THE INSTITUTION OF CIVIL ENGINEERS.
THE INSTITUTION OF MECHANICAL ENGINEERS.
THE INSTITUTION OF NAVAL ARCHITECTS.
THE IRON AND STEEL INSTITUTE.
THE INSTITUTION OF ELECTRICAL ENGINEERS.

MASTER

BRITISH STANDARD SPECIFICATION FOR SPLINES AND SERRATIONS.

LONDON:
PUBLISHED FOR THE ASSOCIATION BY CROSBY LOCKWOOD & SON,
7, STATIONERS' HALL COURT, LUDGATE HILL, LONDON, E.C. 4;
AND TO BE PURCHASED FROM ANY BOOKSELLER, OR DIRECT FROM THE OFFICES OF THE
BRITISH ENGINEERING STANDARDS ASSOCIATION,
28, VICTORIA STREET, LONDON, S.W.1.

April, 1929.

COPYRIGHT.
ALL RIGHTS RESERVED, INCLUDING RIGHTS OF TRANSLATION.

Price 2/- Net. Post Free 2/2.

AVA Documents
Document Sharing Hub

CONTENTS.

PAGE

Preface 3

SECTIONS.

I. Nomenclature 5
VIII. B.S. Four and Six Splines 17
IX. Tentative B.S. Multiple Splines 26
X. B.S. Serrations 29

TABLES.

XI. Four Splines (Shallow) 18
XII. Four Splines (Deep) 20
XIII. Six Splines (Shallow) 22
XIV. Six Splines (Deep) 24
XV. Multiple Splines 27
XVI. Serrations 30

OTHER PARTS OF B.S. SPECIFICATION No. 46—1929.

Part 1—1929. B.S. Specification for Keys and Keyways and Coned Shaft Ends, including Sections I to VII and Tables I to X.

Part 3—1929. B.S. Specification for Solid and Split Taper Pins, including Section XI and Table XVII. (*in preparation*).

G.C. (ME) 359.

March, 1930.

BRITISH ENGINEERING STANDARDS ASSOCIATION.

BRITISH STANDARD SPECIFICATION No. 46, PART 2—1929.
SPLINES AND SERRATIONS.

CORRIGENDA.

Table XIII. Six Splines (Shallow). The maximum value for W_1 for $1\frac{1}{8}$ inch diameter shaft to read 0·4030.

Table XIV. Six Splines (Deep). R_2 for $\frac{1}{2}$ inch to $\frac{3}{4}$ inch diameter shafts to read 0·0075.

The minimum value for W_1 for the $\frac{3}{4}$ inch diameter shaft to read 0·1850.

Full document details: BS 46-2:1929
AVA Documents
Document Sharing Hub

PREFACE.

The question of standardising Keys and Keyways was first brought before the Main Committee in 1906, and a Sub-Committee was formed to deal with the work.

The Sub-Committee prepared Standard Specification No. 46 which was approved by the Main Committee and published in 1909. That Specification dealt only with Rectangular Parallel Keys, Keyways and Key Bars.

In 1922, the Sub-Committee was re-constituted to review the Specification published in 1909, and to standardise other forms of Keys in use for general Engineering purposes.

In 1924 a revised Specification containing a modified Table of Rectangular Parallel Keys and a Table of Square Parallel Keys was issued as Standard Specification No. 46—Part 1, which partly superseded Specification No. 46—1909.

The present edition of the Specification has been divided into three parts. In Part 1 in addition to the Rectangular and Square Parallel Keys, the dimensions of which remain unaltered, Standards are given for Square and Rectangular Taper Keys, both Plain and Gib-Head, Peg Feather Keys, Woodruff Keys, Tangential Keys, Coned and Keyed Shaft Ends and Serrations.

Part 2 contains standards for Splines and Serrations, and Part 3 standards for Solid and Split Taper Pins.

It has also been thought desirable to draw up Standard Definitions for various forms of Keys, in the hope that users of Keys will adopt the Standard Nomenclature and thus obviate confusion caused by divergence in technical language.

This edition of the Specification supersedes both No 46—1909, and No. 46—Part 1—1924.

AVA Documents
Document Sharing Hub

BRITISH STANDARD SPECIFICATION FOR KEYS AND KEYWAYS AND CONED SHAFT ENDS.

SECTION I.
NOMENCLATURE.

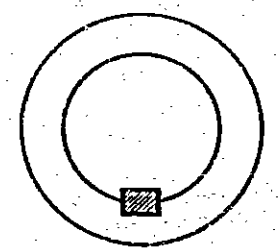

Key.

1. A key is a piece inserted between the joint of two parts to prevent relative movement. For the purpose of this specification a key is defined as a piece inserted in an axial direction between a shaft and a hub to prevent relative rotation.

AVA Documents
Document Sharing Hub

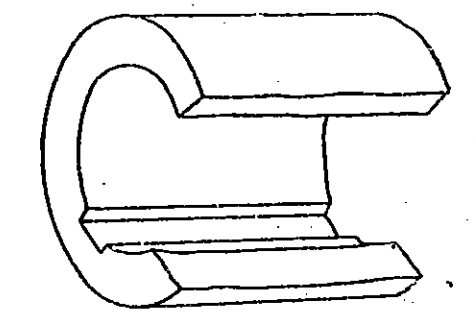

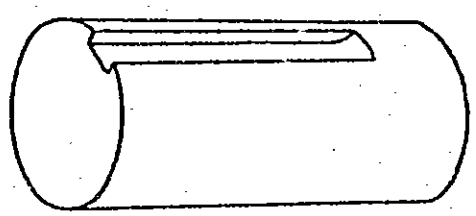

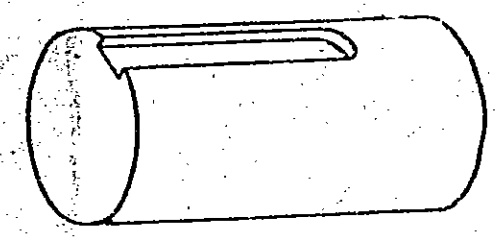

Keyway.

2. A recess in a shaft or hub to accommodate a key.

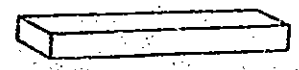

Plain Parallel Key.

3. A key of rectangular or square section: uniform in thickness and width and with squared ends.

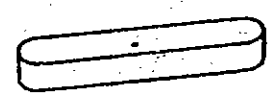

Round Ended Parallel Key.

4. A plain parallel key as defined above with ends rounded as to width.

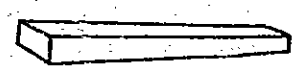

Plain Taper Key.

5. A key of rectangular or square section uniform in width; tapered in thickness and with squared ends.

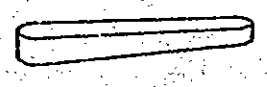

Round Ended Taper Key.

6. A plain taper key as defined above but with ends rounded as to width.

AVA Documents
Document Sharing Hub

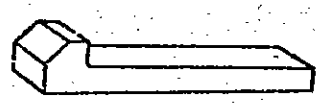

Gib-Head Key.

7. A key provided with a head to facilitate withdrawal.

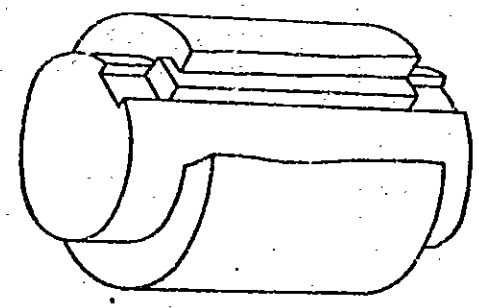

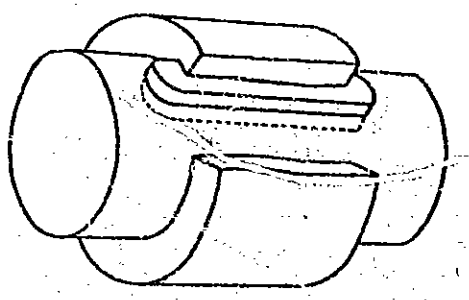

Sunk Key.

8. A key partly in the shaft and partly in the hub.

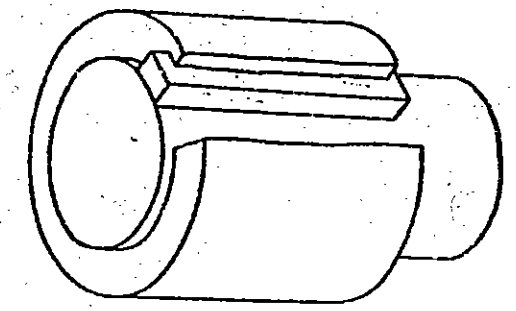

Hollow Saddle Key.

9. A taper key fitting a keyway in the hub, the bottom of the key being formed to fit the cylindrical surface of the shaft.

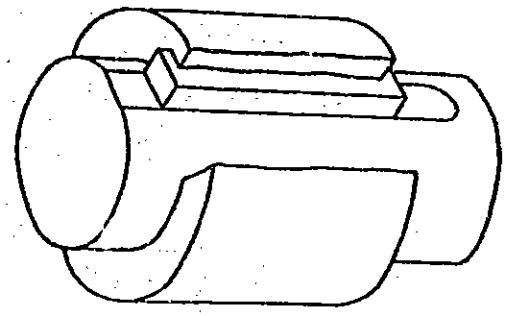

Flat Saddle Key.

10. A taper key fitting a keyway in the hub and a flat on the shaft.

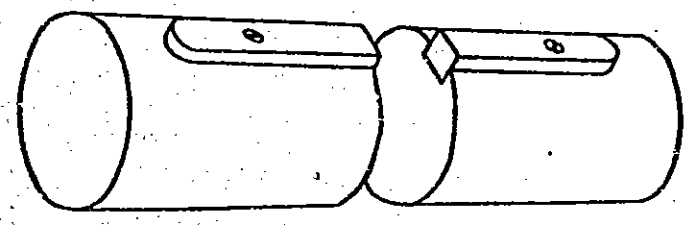

Feather Key.

11. A key attached to one member of a pair and permitting relative axial movement.

Full document details: BS 46-2:1929
AVA Documents
Document Sharing Hub

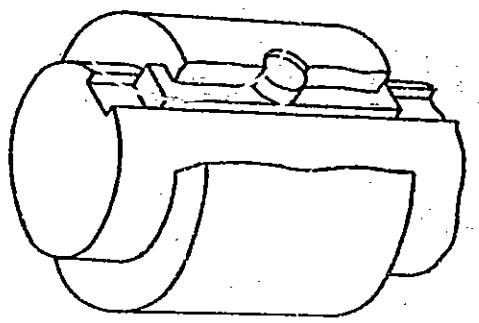

Peg Feather Key.

12. A feather key with a peg to prevent relative movement of the key in the part to which it is attached.

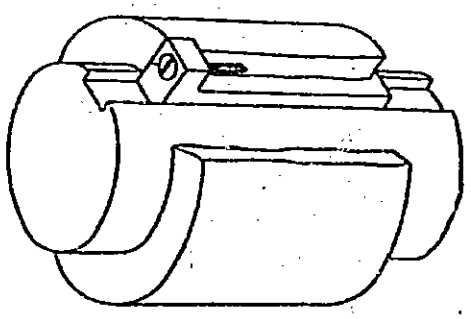

Single Head Feather Key.

13. A feather key with a projection at the end to prevent its axial movement in hub.

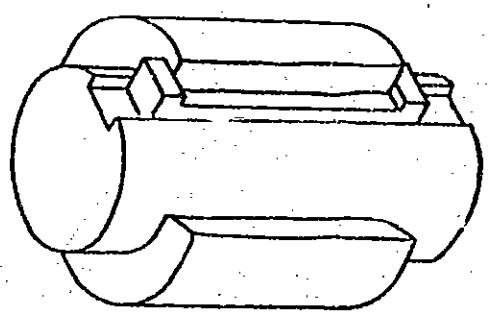

Double Head Feather Key.

14. A feather key with a projection at each end to prevent its axial movement in hub.

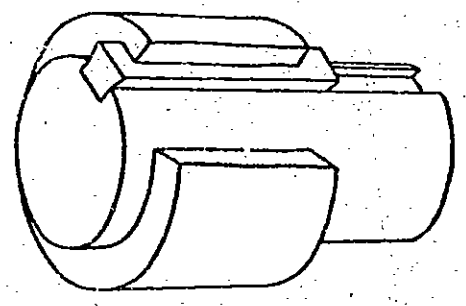

Dovetail Key.

15. A key having one portion of its cross-section of dovetail form.

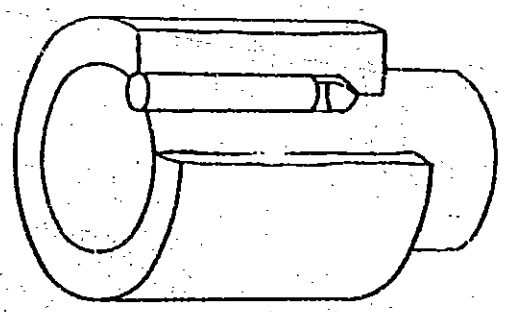

Round Key.

16. A key of circular section fitted in a hole drilled partly in the shaft and partly in the hub.

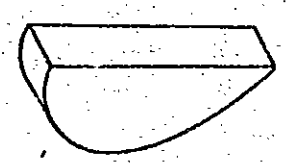

Woodruff Key.

17. A key being in form a segment of a parallel-sided circular disc.

AVA Documents
Document Sharing Hub

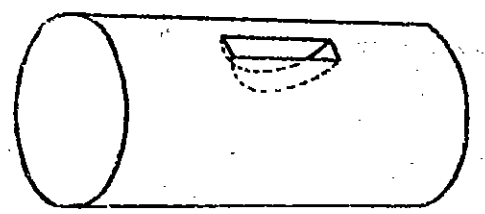

Woodruff Keyway.

18. A segmental recess in a shaft to accommodate a Woodruff key.

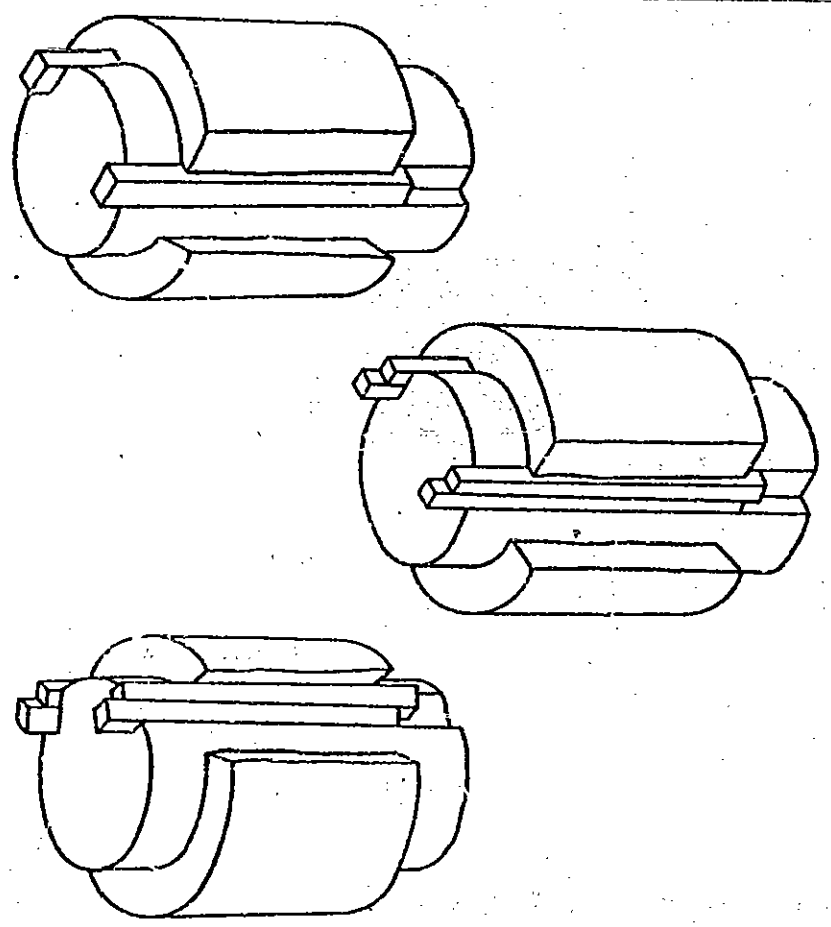

Tangential Keying.

19. The use of keys acting tangentially in opposite directions. (See also illustrations to Tables IX and X.)

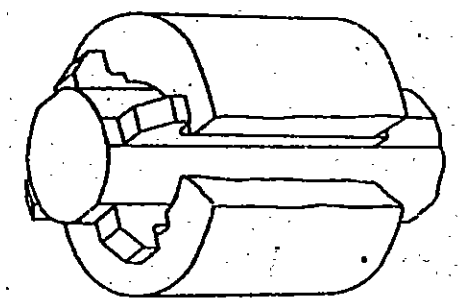

Stake Keying.

20. The use of taper keys for centralising the hub on the shaft and for preventing relative movement. They may be hollow or flat saddle keys.

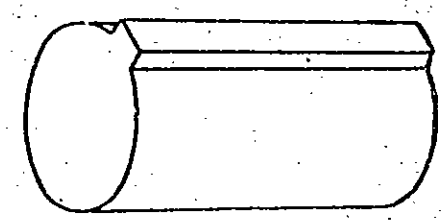

Spline.

21. A key-like projection integral with one member of a pair.

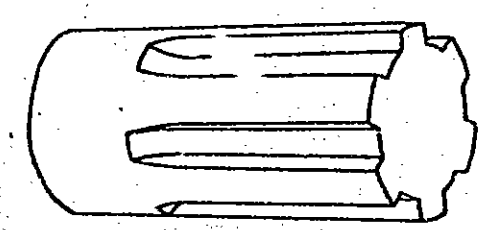

Spline Shaft.

22. A shaft having one or more splines. Spline shafts are designated by the number of splines, *e.g.*, 6 spline shaft.

Full document details: BS 46 2 1929
Documents
Document Sharing Hub