bsi.

...making excellence a habit.™

Please be aware that this PDF has been created from the original hardcopy document, which might not be in good condition and so the PDF might reflect this.

BSI Group
389 Chiswick High Road
London, W4 4AL
United Kingdom

T: +44 20 845 086 9001
F: +44 20 8996 7400
cservices@bsigroup.com
bsigroup.com

British Standards Limited
Registered in England no: 07864997
Registered address: 389 Chiswick High Road
London, W4 4AL, United Kingdom

AVA Documents
INVESTORS IN PEOPLE
Document Sharing Hub

Full document details: BS 487-2:1963

W/D 1 June 1975 S/S by 5169

BRITISH STANDARD 487 : Part 2 : 1963

[UDC 621.642.02 : 669.14 : 621.791]

+ 1 Amendment

SPECIFICATION FOR

FUSION-WELDED STEEL AIR RECEIVERS

Part 2. Receivers to Class 1 requirements

BRITISH STANDARDS INSTITUTION
LIBRARY
BRITISH STANDARDS HOUSE
2, PARK STREET, LONDON, W.1

BRITISH STANDARDS INSTITUTION

AVA Documents
Document Sharing Hub

SPECIFICATION FOR

FUSION-WELDED STEEL AIR RECEIVERS

Part 2. Receivers to Class 1 requirements

B.S. 487 : Part 2 : 1963

Price 12/6 net

BRITISH STANDARDS INSTITUTION

INCORPORATED BY ROYAL CHARTER

BRITISH STANDARDS HOUSE, 2 PARK ST., LONDON, W.1

TELEGRAMS: STANDARDS AUDLEY LONDON TELEPHONE: MAYFAIR 9000

AVA Documents
Document Sharing Hub

THIS BRITISH STANDARD, having been approved by the Mechanical Engineering Industry Standards Committee and endorsed by the Chairman of the Engineering Divisional Council, was published under the authority of the General Council on 9th July, 1963.

The Institution desires to call attention to the fact that this British Standard does not purport to include all the necessary provisions of a contract.

This standard makes reference to the following British Standards:

B.S. 14. Structural steel for the pressure parts of marine boilers.
B.S. 18. Methods for tensile testing of metals.
B.S. 470. Manhole and inspection openings for chemical plant.
B.S. 639. Covered electrodes for the metal-arc welding of mild steel.
B.S. 806. Ferrous pipes and piping installations for and in connection with land boilers.
B.S. 970. Wrought steels. En series.
B.S. 1387. Steel tubes and tubulars suitable for screwing to B.S. 21 pipe threads.
B.S. 1500. Part 1. Fusion welded pressure vessels for use in the chemical, petroleum and allied industries: Carbon and low alloy steels.
B.S. 1501. Carbon and alloy steel plates, sections and bars.
B.S. 1633. Steel for land boilers, receivers and other pressure vessels.
B.S. 2600. General recommendations for the radiographic examination of fusion welded butt joints in steel.
B.S. 2910. General recommendations for the radiographic examination of fusion welded circumferential butt joints in steel pipes.
B.S. 3602. Steel pipes and tubes for pressure purposes. Carbon steel: high duties.

British Standards are revised, when necessary, by the issue either of amendment slips or of revised editions. It is important that users of British Standards should ascertain that they are in possession of the latest amendments or editions.

The following B.S.I. references relate to the work on this standard:
Committee references MEE/21 and MEE/21/3
Draft for comment AB(MEE) 661

CONTENTS

		Page
Co-operating organizations		5
Foreword		6
SECTION ONE: GENERAL		
1.	Scope	6
2.	Information to be supplied by the purchaser	7
3.	Information to be supplied by the manufacturer	7
4.	Compliance	7
5.	Definitions and notation	7
SECTION TWO: MATERIAL		
6.	Material for construction	8
7.	Test certificate for materials	9
SECTION THREE: CONSTRUCTION		
8.	Cylindrical shell	9
9.	End plates	9
10.	Types of welded joints	10
11.	Weld preparation and procedure	10
12.	Electrodes for manual welding	13
13.	Tests of welded seams and of welder competence	13
14.	Test plates	13
15.	Re-tests	20
16.	Non-destructive tests	21
17.	Repairs to welded seams after radiographic examination	21
18.	Heat treatment	22
19.	Method of fixing the ends	23
20.	Access	26
21.	Mounting connections	26
22.	Drainage	37
23.	Circularity of shell	37
SECTION FOUR: RULES FOR SCANTLINGS		
24.	Scantlings	37
25.	Thickness of cylindrical shell plate	37

AVA Documents
Document Sharing Hub

		Page
26.	Thickness and shape of ends	38
27.	Openings in cylindrical shell and end plates	40

SECTION FIVE: INSPECTION, TESTING AND MARKING OF FINISHED RECEIVERS

28.	Inspection	45
29.	Hydraulic test	45
30.	Testing facilities	46
31.	Marking	46
32.	Certificate of construction and test	46

CO-OPERATING ORGANIZATIONS

The Mechanical Engineering Industry Standards Committee, under whose supervision this British Standard was prepared, consists of representatives from the following Government departments and scientific and industrial organizations:

*Admiralty
Air Ministry
*Associated Offices' Technical Committee
Association of Consulting Engineers (Incorporated)
Association of Mining Electrical and Mechanical Engineers
British Chemical Plant Manufacturers' Association
*British Compressed Air Society
*British Electrical and Allied Manufacturers' Association
*British Engineers' Association
British Gear Manufacturers' Association
British Internal Combustion Engine Manufacturers' Association
*British Iron and Steel Federation
*British Railways Board
Crown Agents for Oversea Governments and Administrations
D.S.I.R.—National Engineering Laboratory
*Electricity Council, the Generating Board and the Area Boards in England and Wales
Engineering Equipment Users' Association
Gas Council
High Commission of India
*Institute of Marine Engineers
Institute of Petroleum
Institution of Civil Engineers
Institution of Gas Engineers
Institution of Heating and Ventilating Engineers
*Institution of Mechanical Engineers
Institution of Mechanical Engineers (Automobile Division)
Institution of Production Engineers
Locomotive and Allied Manufacturers' Association of Great Britain
Machine Tool Trades Association
*Ministry of Labour (H.M. Factory Inspectorate)
*Ministry of Power
Ministry of Public Building and Works
*Ministry of Transport
National Coal Board
*National Physical Laboratory (D.S.I.R.)
Radio Industry Council
War Office

The Government departments and scientific and industrial organizations marked with an asterisk in the above list, together with the following, were directly represented on the Committee entrusted with the preparation of this standard:

British Welding Research Association
Bureau Veritas
Diesel Engineers' and Users' Association
Institute of Welding
Institution of Mining Engineers
Lloyd's Register of Shipping
London Transport Board
North East Coast Institution of Engineers and Shipbuilders
Society of Motor Manufacturers and Traders Ltd.
Tank and Industrial Plant Association
Manufacturers of air receivers

AVA Documents
Document Sharing Hub

BRITISH STANDARD SPECIFICATION FOR

FUSION-WELDED STEEL AIR RECEIVERS

Part 2. Receivers to Class 1 requirements

FOREWORD

This British Standard has been prepared at the request of industry and under the direction of the Mechanical Engineering Industry Standards Committee to cover air receivers manufactured to Class 1 requirements.

Receivers manufactured to this standard are required to be inspected during manufacture by an Inspecting Authority and non-destructive testing of the welded seams is also mandatory. In consequence no limit is placed on the size or design pressure of receivers manufactured to this standard.

Attention is drawn to the fact that various regulations are laid down by most countries and these should be taken into account when making receivers for export.

This standard is one of a series for air receivers; the other British Standards in the series are:

B.S. 428. Forge welded steel air receivers.
B.S. 429. Riveted steel air receivers.
B.S. 430. Solid drawn steel air receivers not intended for transport.
B.S. 487. Fusion-welded steel air receivers. Part 1. For pressures not exceeding 500 lb/sq in.
B.S. 1099. Small fusion-welded steel air receivers.
B.S. 1123. Safety valves, gauges and other safety fittings for air receivers and compressed air installations.
B.S. 3256. Small fusion welded air reservoirs for road and railway vehicles.

NOTE 1. If it is required to convert the figures in this standard from British units into metric units, it is recommended that the conversion factors and tables of conversion contained in B.S. 350, 'Conversion factors and tables' be used. Attention is also drawn to B.S. 2856, 'Precise conversion of inch and metric sizes on engineering drawings'.

NOTE 2. In place of the customary but incorrect use of the pound as a unit of force, the unit called a pound force (abbreviation lbf) has been used in this standard. It is that force which, when acting on a body of mass one pound, gives it an acceleration equal to that of standard gravity. The unit of ton-force is used similarly.

SPECIFICATION

SECTION ONE: GENERAL

SCOPE

1. This British Standard applies to Class 1 fusion welded steel air receivers. No limitation is placed on the size or design pressure for the receiver but the standard requires non-destructive examination of all seams and consideration

should therefore be given during design to the practicability of applying these tests.

This standard does not apply to containers used for the independent conveyance of compressed air or permanent or liquefiable gases for which provision is made in B.S. 399, B.S. 400, B.S. 401, B.S. 1045, B.S. 1287 and B.S. 1288.

NOTE. Attention is also drawn to Part 1 of this standard which provides for Class 2 and 3 fusion-welded steel air receivers for pressures not exceeding 500 lbf/in², to B.S. 1099 which provides for Class 3 small fusion-welded air receivers of internal diameters not exceeding 12 in and design pressures not exceeding 250 lbf/in² and to B.S. 3256 which provides for small fusion-welded air reservoirs for road and railway vehicles.

INFORMATION TO BE SUPPLIED BY THE PURCHASER

2. The purchaser shall disclose to the manufacturer at the time of enquiry:

a. Any exceptional condition under which the receiver will be required to operate, such as low temperatures.

b. Whether the receiver must comply with any requirements additional to those contained in this standard including any special statutory or other regulations.

c. Whether detailed drawings are required by the purchaser.

d. The name of the Inspecting Authority.

NOTE. The use of the term 'Inspecting Authority' in this standard refers to the person or organization appointed to undertake the work of supervision required by this Standard.

INFORMATION TO BE SUPPLIED BY THE MANUFACTURER

3. The manufacturer shall supply the Inspecting Authority with fully dimensioned drawings showing in full detail the construction of the air receiver for approval before putting the work in hand.

COMPLIANCE

4. Fusion welded steel air receivers purporting to comply with this standard shall conform in all respects with the relevant requirements herein prescribed.

DEFINITIONS AND NOTATION

5. *a.* For the purpose of this British Standard the following definitions and notations apply:

(i) *Air receiver.* Any fusion welded vessel intended to contain air or inert gas above atmospheric pressure other than the exception in Clause 1.

(ii) *Fusion welded.* The metal arc process with covered electrodes (see Clause 12) or any other electric process in which protection against atmospheric contamination is provided during welding.

AVA Documents
Document Sharing Hub

b. The following notation is used in this standard:

T = thickness (in inches). Subscript b refers to branches or sockets
c refers to compensation
e refers to ends
s refers to shells

d = inside diameter (in inches)
D = outside diameter (in inches)
f = design stress (lbf/in²)
h = internal height of dished end (in inches)
J = joint factor
K = a factor dependent on the ratio $\frac{h + T_e}{D}$
P = design pressure (lbf/in²)
r = inside corner radius (in inches). Subscript m refers to manhole opening
R = inside radius of dished ends (in inches)
W = minor axis of manhole opening (in inches)

SECTION TWO: MATERIAL

MATERIAL FOR CONSTRUCTION

6. *a. Plate material.* The steel used in the construction of the air receiver shall comply with:

(i) B.S. 14. Structural steel for the pressure parts of marine boilers.
or (ii) B.S. 1633. Steel for land boilers, receivers, and other pressure vessels, Classes A, B or C.
or (iii) B.S. 1501–151. Carbon steel plates, sections and bars, Grades A, B or C.
or (iv) B.S. 1501–161. Carbon steel (silicon killed) plates, sections and bars, Grades A, B or C.

b. Seamless shells. Seamless tubes complying with B.S. 3602, 'Steel pipes and tubes for pressure purposes. Carbon steel: high duties, HFS 23 or CDS 23 may be used.

c. Bar material. Bar material if used shall comply with:

(i) B.S. 14. Structural steel for the pressure parts of marine boilers.
or (ii) B.S. 1633. Steel for land boilers, air receivers and other pressure vessels, Classes A, B or C.
or (iii) B.S. 1501–151. Carbon steel plates sections and bars, Grades A, B or C.
or (iv) B.S. 1501–161. Carbon steel (silicon killed) plates, sections and bars, Grades A, B or C.
or (v) B.S. 970. Wrought steels, En2C.

d. Sockets. Seamless steel sockets complying with B.S. 1387 may be used within the limitations specified in Table 1.

NOTE. If a receiver is required for operation at low temperatures this shall be stated by the purchaser on the enquiry or order so that the material for the air receiver can be given special consideration by the manufacturer and Inspecting Authority (see B.S. 1510, 'Low temperature supplementary requirements to B.S. 1501-6').

TEST CERTIFICATES FOR MATERIALS

7. Certificates for the material shall be supplied giving the full chemical analysis, details of the test results and a statement of the process of manufacture of the steel. If required facilities shall be provided for the Inspecting Authority to examine plates at the plate mills, to select and mark test pieces and to witness tests thereon.

SECTION THREE: CONSTRUCTION

CYLINDRICAL SHELL

8. Cylindrical shells made from plate shall, wherever it is reasonably practicable, be made from a single plate.

If the dimensions are such that the shell cannot be made from a single plate it shall be made with the minimum number of joints and the longitudinal seams in adjacent sections shall not be in the same line.

END PLATES

9. *a.* Welded-on end plates shall be outwardly dished (i.e. concave to pressure) and shall be in one piece made from one rolled plate except that, when this is impracticable owing to the large diameter, and subject to agreement between the manufacturer and the purchaser or Inspecting Authority, end plates may be made from two plates butt-welded together.

For end plates manufactured from two plates, a double-sided butt weld shall be used, the joint shall lie within $1/5D$ either side of a diameter, and all welding and dressing of the weld shall be completed before the end is formed or dished. The welded seam shall comply with the requirements specified for the longitudinal seams (see Clause 10*a*).

If more than two plates are considered necessary the agreement of the manufacturer and the purchaser or Inspecting Authority shall be obtained to the proposed method of construction.

b. All dishing and flanging of the end plates shall be carried out at a forging temperature. After forming, plate edges to be welded shall be machined or flame cut by machine and shall be clean and free from rust, oil or other foreign matter. Any scale remaining after forming shall be removed.

AVA Documents
Document Sharing Hub

c. Bolted on end plates may be flat or outwardly dished, but flat end plates shall not be used on receivers exceeding 24 inch internal diameter.

NOTE. For the design of flanges and bolting, reference should be made to B.S. 1500, 'Fusion welded pressure vessels for use in the chemical, petroleum and allied industries', Part 1, 'Carbon and low alloy steels', Section Three M.

TYPES OF WELDED JOINTS

10. The types of welded joints used in the construction of the receiver shall be as follows: (see also Clause 11).

a. Longitudinal and circumferential seams. Longitudinal and circumferential seams shall be made with double sided butt-welds of the type referred to in Clause 11*b*. For receivers less than 24 inches internal diameter and having a shell thickness not exceeding ⅝ in, a single sided weld using a technique approved by the Inspecting Authority is permitted.

b. Flange joints. Flange joints in the shell, or at the end of a receiver, or on a flanged branch connection shall be made in accordance with Fig. 9.

WELD PREPARATION AND PROCEDURE

11. The surfaces of all plates at and adjacent to the weld shall be clean, dry and free from scale, slag and irregularities before welding is commenced.

During the deposition of the metal, slag shall be removed after making each run. There shall be no perceptible undercutting of the plate.

a. Fillet welds. For joints other than seams, 45° fillet welds in accordance with Fig. 1*h* may be used. No part of the exposed face of the weld shall lie within the 45° line and it shall be free from marked irregularities.

b. Butt welds. Plate edges shall be prepared for welding by machining or flame cut by machine in accordance with Fig. 1. The use of square-edge butt welds in accordance with Figs. 1*a* and 1*b* is only permitted for plate 3/16 in thick.

The requirements of this clause with respect to plate edge preparation do not necessarily apply to the automatic or submerged arc welding processes, for which special forms of preparation may be necessary.

Before welding is commenced the surfaces of the plates at the longitudinal and/or circumferential seams shall at no part be out of alignment with one another by more than 10 per cent of the plate thickness and in no case shall the misalignment exceed ⅛ in for longitudinal seams or 3/16 in for circumferential seams.

The weld metal shall be built up to a thickness of not less than 3/32 in or more than the 3/16 in in excess of the plate thickness. The excess metal shall then be removed by chipping or grinding but the finished thickness shall not be less than the thickness of the plate. For single sided butt-welds the internal excess weld metal need not be removed but the outstand of the bead shall not exceed 10 per cent of the plate thickness. The bead shall be symmetrical, of smooth contour and free from under-cutting.

Fig.	Joint	Name	Application
1*a*	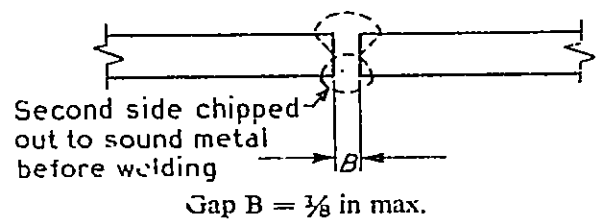	Open square double welded butt joint.	Butt welds in plates 3/16 in thick only.
1*b*	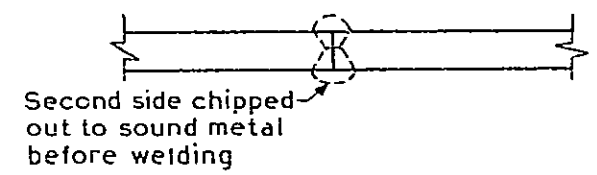	Close square double welded butt joint.	Butt welds in plates 3/16 in thick only.
1*c*	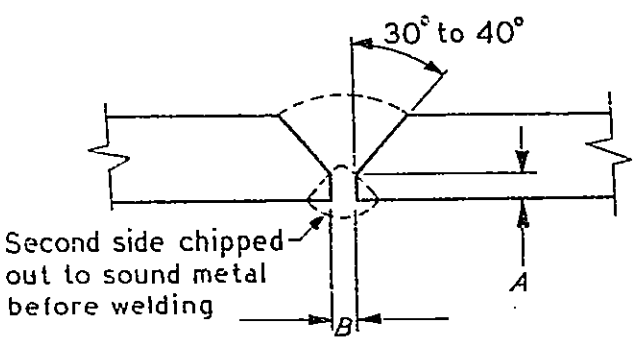	Double welded butt joint with single 'Vee'	Butt welds in plates not exceeding ⅞ in thick.
1*d*	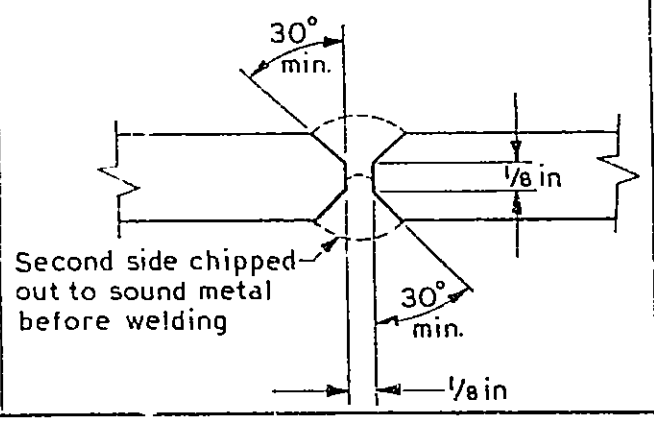	Double welded butt joint with symmetrical double 'Vee'.	Butt welds in plates not exceeding 1¼ in thick.

Fig. 1. Joint details

AVA Documents
Document Sharing Hub

Fig.	Joint	Name	Application
1*e*	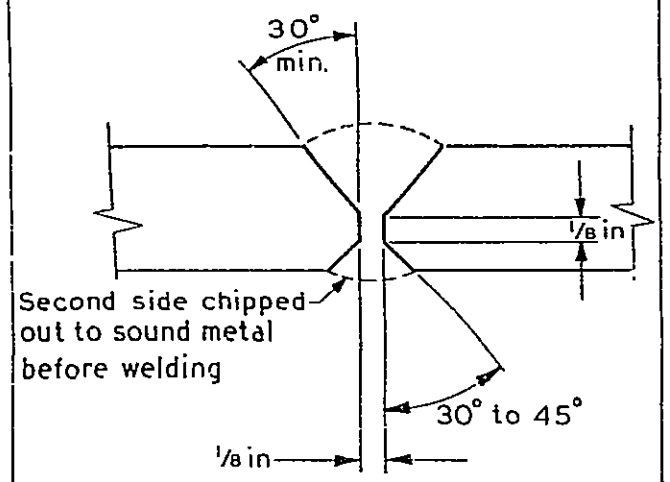	Double welded butt joint with asymmetrical double ' Vee '.	Butt welds in plates not exceeding 1¼ in thick
1*f*	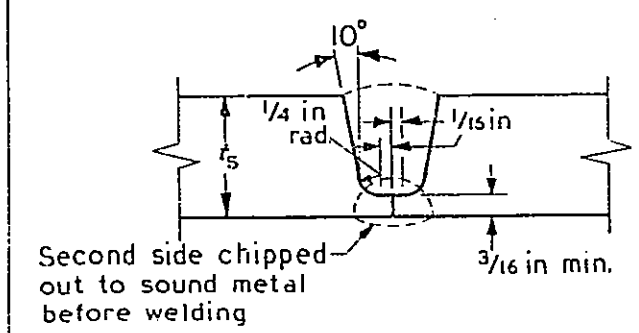 Weld dimensions are minima	Double welded butt joint with single ' U '.	Butt welds in plates where the thickness exceeds ¾ in.
1*g*	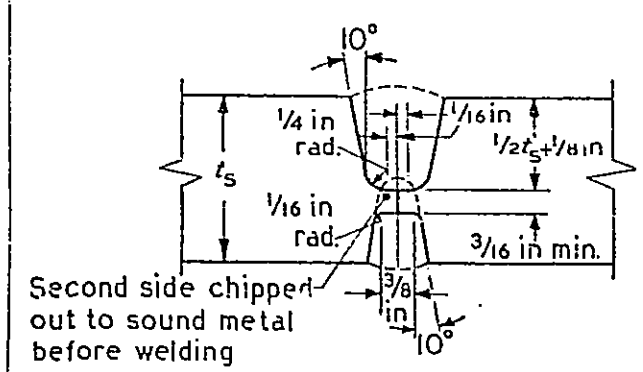 Weld dimensions are minima	Double welded butt joint with double ' U '.	Butt welds in plates where the thickness exceeds ¾ in.
1*h*	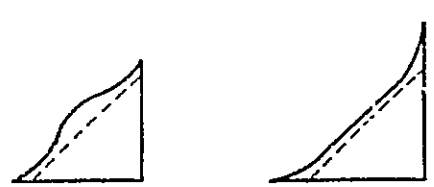	Fillet welds.	Joints other than seams (See Clause 11 *a*).

Fig. 1. Joint details (*continued*)

ELECTRODES FOR MANUAL WELDING

12. Electrodes for manual welding shall comply in all respects with B.S. 639, ' Covered electrodes for the metal-arc welding of mild steel '.

TESTS OF WELDED SEAMS AND OF WELDER COMPETENCE

13. The following tests shall be carried out for each receiver except that, if a number of similar small receivers are welded by the same welder in a reasonably continuous operation, two or more receivers may, at the discretion of the Inspecting Authority be represented by one set of test pieces.

The welder shall stamp each test piece with his identification number so that the tests carried out on them will establish the competence of the welder as well as the quality of the weld.

TEST PLATES

14. *a.* All test plates shall be heat treated in accordance with Clause 18 before any tests are carried out.

Longitudinal seams. Test plates shall be prepared at each end of each longitudinal seam of the receiver or equivalent as defined in Clause 13. By agreement with the Inspecting Authority, the test plates may be attached at one end of the longitudinal seam only. The test plates shall be of sufficient size for the preparation of the test pieces specified and any repeat tests that may be required. The material for each set of test plates shall be cut from the plate or plates forming the appropriate seam and before being cut shall be stamped by the inspector.

Where a shell is formed in two or more rings a staggered longitudinal seam may be regarded as a continuous longitudinal seam, provided the welding is carried out in reasonably continuous operation and by the same operator or operators. One complete set of test pieces (see Figs. 2 and 3), may be used to represent such a staggered longitudinal welded seam of the shell providing the Inspecting Authority has been informed of the manufacturer's intention to adopt this procedure prior to the commencement of welding.

The weld preparation in the test plates shall be similar to that adopted for the corresponding edges of the longitudinal seam and the test plates shall be secured to the shell plates so that the respective fusion faces are in continuous alignment.

Test plates warped during welding by not more than 5 degrees may be straightened cold before heat treatment.

b. Circumferential seams. Test plates are not required for circumferential seams, except in cases where the receiver has circumferential seams only or where the method of welding the circumferential seams is significantly different from that used for the longitudinal seams, when the method of providing the test plates shall be agreed with the Inspecting Authority.

AVA Documents
Document Sharing Hub