bsi.

...making excellence a habit.™

Please be aware that this PDF has been created from the original hardcopy document, which might not be in good condition and so the PDF might reflect this.

BSI Group
389 Chiswick High Road
London, W4 4AL
United Kingdom

T: +44 20 845 086 9001
F: +44 20 8996 7400
cservices@bsigroup.com
bsigroup.com

British Standards Limited
Registered in England no: 07864997
Registered address: 389 Chiswick High Road
London, W4 4AL, United Kingdom

AVA Documents
INVESTORS IN PEOPLE
Document Sharing Hub

Documents
Document Sharing Hub
Full document details: BS 78:1938

No. 78—1938.

British Standards Institution
Incorporated by Royal Charter.

FORMED IN 1901 AS THE ENGINEERING STANDARDS COMMITTEE.
INCORPORATED IN 1918 AS THE BRITISH ENGINEERING STANDARDS ASSOCIATION.

BRITISH STANDARD SPECIFICATION

FOR

CAST IRON PIPES (VERTICALLY CAST)

FOR

WATER, GAS AND SEWAGE AND SPECIAL CASTINGS FOR USE THEREWITH.

(REVISED AUGUST, 1938.)

This Specification, having been approved by the Public Works Industry Committee and endorsed by the Chairman of the Engineering Divisional Council, was published under the authority of the General Council as a British Standard on 15th August, 1938.

LONDON:
PUBLISHED BY THE BRITISH STANDARDS INSTITUTION,
PUBLICATIONS DEPARTMENT,
28, VICTORIA STREET, LONDON, S.W.1.
Telegrams: Standards, Sowest, London. *Telephone:* Abbey 8888.

August, 1938.

COPYRIGHT.
ALL RIGHTS RESERVED, INCLUDING RIGHTS OF TRANSLATION.

Price ~~5/~~ 15/ net. Post free ~~5/6~~.

Full document details: BS 78:1938
AVA Documents
Document Sharing Hub

CONTENTS.

		PAGE
	Co-operating Organisations	4
	Foreword	5
	SPECIFICATION.	
1.	Definitions	7
2.	General	7
3.	Quality of Metal	7
4.	Provision of Test Bars	8
5.	Dimensions of Test Bars	8
6.	Mechanical Tests	10
7.	Independent Tests	10
8.	Transverse Test	11
9.	Number of Transverse Tests	11
10.	Tensile Test	12
11.	Number of Tensile Tests	12
12.	Mode of Casting	12
13.	Moulds and Cores	12
14.	Removal from Moulds	13
15.	Freedom from Defects	13
16.	Tolerances on Dimensions of Straight Pipes	13
17.	Testing of Diameters of Plain Sockets and Spigots of Straight Pipes and Specials	13
18.	Test for Straightness and Regularity	14
19.	Permissible Variations in Thickness and Diameter of Special Castings	14
20.	Half Turned and Bored Joints	14
21.	Length of Straight Pipes	15
22.	Permissible Variation in Length of Straight Pipes	15
23.	Flanges	15
24.	Marking	16
25.	Hydraulic Test	17
26.	Coating	18
27.	Weighing and Marking of Weights	19
28.	Permissible Deviation from Standard Weights	19
29.	Defective Castings	19
30.	Inspection	20
31.	Maker's Certificate	20
32.	Rejection	20
33.	Testing Facilities	20

TABLES.

		PAGE
1.	Standard Thicknesses and External Diameter for Spigot and Socket and Flange Straight Pipes	21
2.	Standard Weights of Straight Spigot and Socket Pipes	23
3.	Standard Weights of Straight Flanged Pipes	25
4.	Dimensions of Standard Spigots and Sockets, Classes A and B	27
5.	Dimensions of Standard Spigots and Sockets, Classes C and D	29
6.	Dimensions of Standard ¼ Bends (90°)	31
7.	Dimensions of Standard ⅛ Bends (45°)	32
8.	Dimensions of Standard 1/16 Bends (22½°)	33
9.	Dimensions of Standard 1/32 Bends (11¼°)	34
10.	Dimensions of Standard 1/64 Bends (5⅝°)	35
11.	Dimensions of Standard 90° Duckfoot Bends	37
12.	Dimensions of Standard 90° Elbows	40
13.	Dimensions of Standard Hydrant Tees	41
14.	Dimensions of Standard Horsley Syphons	43
15.	Dimensions of Standard Collars	44
16.	Dimensions of Standard Split Collars, Classes A and B	47
17.	Dimensions of Standard Split Collars, Classes C and D	49
18.	Dimensions of Standard Tapers	51
19.	Dimensions of Standard 45° Angle Branches	59
20.	Dimensions of Standard Tees	67
21.	Dimensions of Standard Crosses	75
22.	Dimensions of Standard Flanged Sockets and Spigots	83
23.	Dimensions of Standard Plugs	85
24.	Dimensions of Standard Caps	86
25.	Weight per Foot of Plain Barrel for Water, Gas and Sewage, and Flange Weights	87

APPENDICES.

A.	Pipe Flanges—	
	Table A. Flanges for Pipes up to 200 ft. Head	88
	Table B. Flanges for Pipes up to 400 ft. Head	90
	Table C. Flanges for Pipes up to 800 ft. Head	92
B.	Correction Factors for the Transverse Test	94
C.	Dimensions of Old Design of Standard Spigots and Sockets	95
D.	Standard Weights of Old Design of Straight Spigot and Socket Pipes	97

AVA Documents
Document Sharing Hub

CO-OPERATING ORGANISATIONS.

The Public Works Industry Committee under whose supervision this British Standard was prepared consists of representatives from the following Government Departments and Scientific and Industrial Organisations :—

Admiralty.
*Crown Agents for the Colonies.
*High Commissioner for India.
*H.M. Office of Works.
*Ministry of Health.
Ministry of Transport.
War Office.
Association of Consulting Engineers.
Asphalt Roads Association.
British Constructional Steelwork Association.
British Iron and Steel Federation.
British Road Tar Association.
*British Waterworks Association.
Cement Makers' Federation.
County Surveyors' Society.
Federation of Civil Engineering Contractors.
*Institution of Civil Engineers.
*Institution of Gas Engineers.
Institution of Municipal and County Engineers.
Institution of Structural Engineers.
*Institution of Water Engineers.
Iron and Steel Institute.
Municipal Tramways and Transport Association.
National Federation of Clay Industries.
National Federation of Roadstone Quarry Owners.
Public Works Contractors' Association.
Railway Companies of Great Britain.
Tramways, Light Railways and Transport Association.

The Government Departments and Scientific and Industrial Organisations marked with an asterisk on the above list, together with the following, were directly represented on the Committee entrusted with the preparation of this British Standard.

General Post Office.
National Physical Laboratory.
Associated Master Plumbers and Domestic Engineers.
British Cast Iron Research Association.
British Commercial Gas Association.
British Ironfounders' Association.
Gas Companies Protection Association.
Green sand Pipe Founders' Association of Scotland.
Institution of Heating and Ventilating Engineers.
London County Council.
National Gas Council.
Royal Sanitary Institute.

FOREWORD.

The standardisation of Cast Iron Pipes was first authorised in 1903 as the result of a request received from the Institution of Water Engineers (then the British Association of Water Engineers) and a British Standard Specification was issued in 1917.

It was soon felt that the work that had been carried out could be made still more valuable, and after the Specification had been in existence a few years it was decided that a revised edition should be prepared. This work has been in hand for some years and the present issue represents a considerable volume of work. A new design of socket has been standardised, the suitability of which has been thoroughly established by extensive investigations carried out both at the works of the Manufacturer and also at the National Physical Laboratory. It is appreciated, however, that the immediate scrapping of all the old patterns would place a very heavy burden on Manufacturers, in consequence, it has been decided to allow a time limit of five years during which Manufacturers will be able to introduce the new patterns as replacements become necessary. The old design is therefore reproduced in the appendix together with the appropriate weights.

As the new socket is interchangeable with the old, no inconvenience will be occasioned to users by the change over.

The range of standard special castings has been considerably augmented and should now provide for all the most generally used fittings for both water and gas.

In this revision it has been possible to introduce the amended requirements for testing the quality of the cast iron which have just been included in the revised edition of B.S. 321—Grey Iron Castings.

In view of the extensive range of fittings that have now been standardised, the task of calculating weights is one which will take a considerable time to complete.

It has been felt therefore that the publication of the revised specification should not be withheld till this information is available, as it is desired to commence the introduction of the new designs as quickly as possible. It is hoped to include the figures for weight in an early revision.

In order to keep abreast of progress in the Industries concerned, the British Standards are subject to periodical review.

AVA Documents Document Sharing Hub

Suggestions for improvements, addressed to the British Standards Institution, 28, Victoria Street, London, S.W.1, will be welcomed at all times. They will be recorded and in due course brought to the notice of the Committees charged with the revision of the Publications to which they refer.

First Published ... ... *October*, 1917.

First Revision ... ... *August*, 1938.

NOTE.—*The Institution desires to call attention to the fact that this Specification is intended to include the technical provisions necessary for the supply of the material herein referred to, but does not purport to include all the necessary provisions of a contract.*

BRITISH STANDARD SPECIFICATION

FOR

CAST IRON PIPES (VERTICALLY CAST)

FOR

WATER, GAS AND SEWAGE AND SPECIAL CASTINGS FOR USE THEREWITH.

(REVISED AUGUST, 1938.)

Definitions.

1. For the purposes of this Specification the following definitions shall apply :—

(*a*) *Pipe.*—The term "pipe" denotes a straight pipe or a special casting.

(*b*) *Straight Pipe.*—The term "straight pipe" denotes a spigot and socket, double spigot, or double flanged pipe, straight in the axis, of uniform bore, and of standard length.

(*c*) *Special Casting.*—The term "special casting" denotes any casting other than a "straight pipe."

General.

2. The pipes shall be of cast iron with joints of the following types :—Spigot and socket, turned and bored, or flanged. They shall conform in every respect to this Specification and the tables and drawings hereunto attached.

When pipes are ordered with joints of a type other than those mentioned above, the body of the pipes shall conform to the general requirements of this Specification.

Standard straight pipes and special castings for spigot and socket joints shall be supplied with a bead on the spigot end unless otherwise ordered by the Purchaser.

Quality of Metal used in Casting the Pipes.

3. The metal used for casting the pipes shall be a suitable mixture of pig iron and scrap and shall be remelted in the cupola or air-furnace, or may, if approved by the Purchaser, be refined in a molten condition in a mixer of an active type. The pig iron shall be best tough grey foundry pig iron, and the scrap shall be clean,

AVA Documents

unburnt and of good quality. There shall be no admixture of cinder iron or of any material calculated to render the metal inferior in quality, and the resulting casting shall not be white or vitreous on fracture.

Provision of Test Bars.

4. The Manufacturer shall cast each day, free of cost, in pairs, six standard transverse test bars and six standard tensile test bars (hereinafter referred to as transverse test bars and tensile test bars respectively), or any such number as may be required by the Purchaser, or his representative, of the dimensions specified in Clause 5. The bars shall be cast at suitable intervals during the day from the same metal as is drawn for making the pipes.

Each transverse test bar and tensile test bar shall have marked on it the date of manufacture and a consecutive number or distinguishing number by means of which the test bar can be identified with the pipes it represents.

Dimensions of Test Bars.

5. (*a*) *Transverse test bars.*—Transverse test bars shall be of the diameter specified by the Engineer or Purchaser according to the thickness of the barrel of the straight pipe represented or, in the case of special pipes, the thickness of the corresponding straight pipe. They shall conform to the following dimensions :—

Diameter.	Limits on Diameter.	Over-all Length.	Main Cross-Sectional Thickness of Casting represented.
in.	in.	in.	in.
0·6	± 0·045	10	Not exceeding ⅜.
0·875	± 0·065	15	Over ⅜ and not exceeding ¾.
1·2	± 0·090	21	Over ¾ and not exceeding 1⅛.
1·6	± 0·10	21	Over 1⅛ and not exceeding 1⅝.
2·1	± 0·10	27	Over 1⅝.

Bars cast to a diameter in excess of the limits given above may be machined to a diameter within the specified limits. Bars cast within these limits of diameter may also be machined before the transverse test is made, providing that the finished diameter falls within these limits.

(*b*) *Tensile test bars.*—The tensile test bars shall be of the diameter specified by the Engineer or Purchaser according to the thickness of the barrel of the straight pipe represented or, in the case of special pipes, the thickness of the corresponding straight pipe. They shall be cast as parallel bars and then machined to the dimensions shown in the following table. Bars may be tested with either plain or screwed ends.

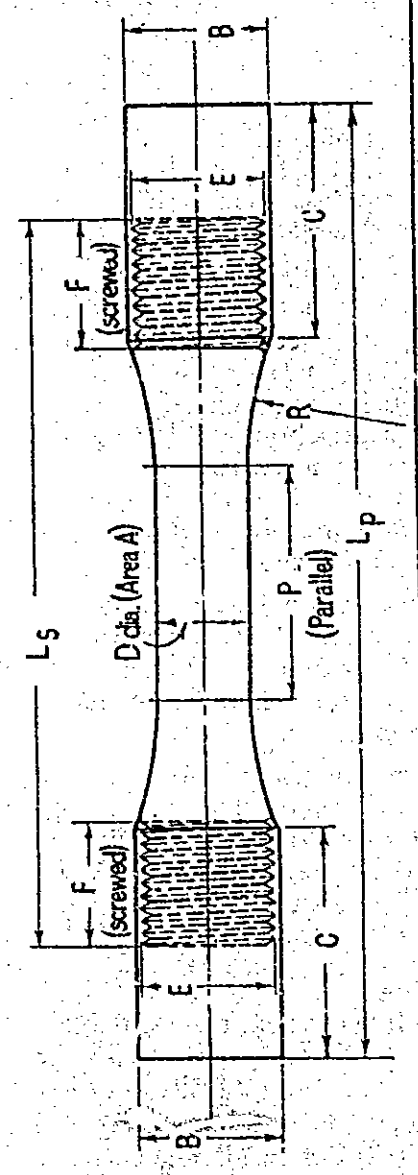

Diameter as Cast.	Gauge Diameter.	Area.	Minimum Parallel Length.	Minimum Radius.	Minimum Length of Plain Ends.	Screwed Ends.		Approx. Minimum Overall Length.		Main cross-sectional thickness of Casting represented.
						Size.	Minimum Length.	Plain Ends.	Screwed Ends	
B	D	A	P	R	C	E	F	L_p	L_s	
in.	in.	sq. in.	in.	in.	in.		in.	in.	in.	in.
0·6	0·399	0·125	1	1¼	1¼	¼ B.S.P. 7/16 B.S.F. 9/16 B.S.W.	9/16	4¼	3	Not exceeding ⅜.
0·875	0·564	0·25	2	3½	1½	¾ B.S.F. ⅞ B.S.W.	¾	7 1/16	4 13/16	Over ⅜ and not exceeding ¾.
1·2	0·798	0·50	2	3½	2	1⅛ B.S.F. 1⅛ B.S.W.	1⅛	8¼	5⅛	Over ¾ and not exceeding 1⅛.
1·6	1·128	1·00	2	3½	2¼	1½ B.S.F. 1½ B.S.W.	1½	9 7/32	7¼	Over 1⅛ and not exceeding 1⅝.
2·1	1·596	2·00	2	3½	3¼	2 B.S.F.	2	11⅛	8¼	Over 1⅝.

The test bars shall be cast as parallel bars of the diameter given in Column B and then machined to the dimensions D and P in the above table.

AVA Document Sharing Hub

(*c*) For castings over 2 inches in thickness a test bar of larger diameter than 2·1 inches may be used by agreement between the Manufacturer and the Purchaser.

Mechanical Tests.

6. The quality of metal shall be ascertained by applying to the transverse test bars and tensile test bars, in suitable approved and accurate testing apparatus, the tests provided for in Clauses 8 and 10.

The requirements of Clauses 8 and 10 shall be deemed to have been complied with if at least two and not less than half the transverse tests, and at least two and not less than half the tensile tests, fulfil the requirements of those clauses.

The tests shall be carried out at the foundry by a competent representative of the Manufacturer at such reasonable time or times as shall be arranged between the Manufacturer and the Purchaser, or his representative, who shall have free and full access to the testing house and apparatus during the carrying out of the tests and at any other time during working hours. Failing proper facilities at the foundry for making these tests, the Manufacturer shall bear the cost of carrying them out elsewhere to the satisfaction of the Purchaser, or his representative, who shall have the same powers as if the testing were carried on at the foundry.

The results of all tests made at the foundry shall at once be entered in a test book, and each entry shall be initialled as correct by the representative of the foundry present when the tests were made. The test book shall be kept at the foundry and be open to inspection by the Purchaser or his representative.

The results of the tests properly made, whether at the foundry or elsewhere shall, unless independent tests are carried out as provided for in Clause 7, be held to be conclusive as to the quality of the metal as ascertainable by mechanical tests, and shall be accepted by the Purchaser as representing the metal of all pipes cast during the day to which the test bars refer.

Independent Tests.

7. Should the Purchaser desire to make independent transverse and tensile tests, the Manufacturer shall, at the request of the Purchaser, furnish so many transverse test bars and tensile test bars of the metal used in casting the pipes as the Purchaser may require. Such test bars shall be cast and marked in all respects as provided for in Clause 4.

The above-mentioned independent transverse and tensile tests shall be carried out by an independent expert who shall be agreed upon between the Purchaser and the Manufacturer or, failing agreement within seven days from the posting of a written

notice by the Purchaser to the Manufacturer, one shall be appointed, at the request of either party, by the Chairman for the time being of the British Standards Institution. The certificate of such expert shall be accepted by the Purchaser and the Manufacturer as conclusive of the result of such tests.

The cost attendant on the carrying out of the independent tests, including the provision at reasonable cost of the test bars, shall follow the acceptance or rejection of the metal as the result of the independent tests.

Transverse Test.

8. A transverse test bar cast in accordance with Clause 5 (*a*) shall, when placed on supports set at the distance shown in Column 2 of the following table, sustain a load applied at the centre of not less than that shown in Column 3 and shall show before rupture a deflection not less than that shown in Column 4. The supports and the point of application of the load shall be rounded to a radius of not less than ⅛ inch.

1	2	3	4
Diameter of Test Bar.	Distance between supports.	Minimum Breaking Load.	Minimum Deflection.
in.	in.	lb.	in.
0·6	9	420	0·06
0·875	12	960	0·09
1·2	18	1 600	0·13
1·6	18	3 650	0·10
2·1	24	6 020	0·14

If the diameter of a transverse test bar as cast varies within the limits specified in Clause 5 (*a*) the equivalent breaking load for the test bar of standard diameter shall be calculated in accordance with the factors given in Appendix B.

Number of Transverse Tests.

9. As provided in Clause 4 such number of transverse tests as the Purchaser or his representative may require but not less than two, shall be made from each day's test bars. If the Purchaser or his representative is not present not less than two nor more than six transverse tests shall be made.

In the event of one or both of the test pieces not satisfying the requirements of the test, additional test pieces shall be taken from the six or more additional test pieces provided, and testing continued until the requirements of Clause 6 are either satisfied or not.

Document Sharing Hub

Tensile Test.

10. The tensile test bar machined to the dimensions shown in Clause 5 (*b*) and tested with either plain or screwed ends shall show a breaking strength of not less than that shown in the following table :—

Diameter of Test Bar.	Minimum Tensile Breaking Strength.
in.	tons per sq. in.
0·6	10
0·875	10
1·2	9
1·6	9
2·1	9

NOTE.—Self aligning grips to ensure axial loading are recommended.

Number of Tensile Tests.

11. As provided in Clause 4, such number of tensile tests as the Purchaser or his representative may require, but not less than two, shall be made from each day's test bars. If the Purchaser or his representative is not present, not less than two nor more than six tensile tests shall be made.

In the event of one or both of the test pieces not satisfying the requirements of the test, additional test pieces shall be taken from the six or more additional test pieces provided, and testing continued until the requirements of Clause 6 are either satisfied or not.

Mode of Casting.

12. (*a*) *Straight Pipes.*—Straight pipes shall be cast vertically in dry sand moulds formed from turned iron patterns and in boxes accurately faced and jointed, and without the use of core nails, chaplets, or thickness pieces, or any other substitute therefor. They shall be cast with a head of metal of sufficient volume to ensure soundness, which head shall be afterwards cut off in a lathe and the finished pipe left the length and shape required. Spigot and socket pipes shall be cast socket downwards.

(*b*) *Special Castings.*—When the size of special castings does not require the use of dry sand moulds and cores, they may be cast in green sand moulds with green sand cores.

Moulds and Cores.

13. The sand used in the moulds and cores shall be sufficiently fine and fresh to produce a smooth and regular surface. The cores shall be smoothly finished.

Where dry sand is used, the moulds and cores shall be properly black-washed, carefully dried, and finished reasonably smooth.

Removal from Moulds.

14. The pipes shall not be removed from the moulds until cooling has proceeded so far as to prevent all risk of straining, cracking or other injury consequent on their removal.

Freedom from Defects.

15. The pipes shall be in all respects sound and good castings, easily worked with a drill or file and shall be free from laps or other imperfections. They shall be neatly dressed and carefully fettled so that no lumps or rough places are left in the barrels or sockets and their inner and outer surfaces shall be smooth. The inner face of the socket shall be left reasonably square.

Tolerances on Dimensions of Straight Pipes.

16. The manufacturing tolerances given below shall be permitted on straight pipes.

NOTE.—The sign ± indicates that the tolerance so marked is permitted both above and below the specified dimension.

(*a*) *Thickness of Barrel* :—

Up to and including 0·5 in. ... minus 0·05 in.

Over 0·5 inch thick ... ... minus 10 per cent.

Provided that in the case of all pipes 12 inches and over in diameter a local tolerance of minus 12½ per cent shall be permitted on any area of 36 square inches of which the maximum dimension is not greater than 9 inches.

(*b*) *External Diameter* :—

On all sizes of pipes ... ... ± 0·06 in.

(*c*) *Internal Diameter of Plain Sockets* :—

On all sizes of pipes ... ... ± 0·13 in.

Testing of Diameters of Plain Sockets and Spigots of Straight Pipes and Specials.

17. To test whether the external diameter of the spigots and the internal diameter of the sockets comply with the requirements respectively specified, the Manufacturer shall provide and use iron ring gauges of the maximum and minimum permissible diameters of the sockets, and iron ring gauges of the minimum and maximum permissible diameters of the spigots, and every pipe shall be tested as follows :—

(*a*) The template of maximum diameter shall not be capable of being passed into and through the socket and the template of

Document Sharing Hub

minimum diameter shall be passed into and to the bottom of every socket.

(*b*) The iron ring of minimum diameter shall not be capable of being passed over the spigot, and the iron ring of maximum diameter shall be passed over every spigot.

Test for Straightness and Regularity.

18. Each straight pipe shall be tested for straightness, regularity of thickness, and diameter by being rolled on a level iron gantry and by the use of suitable straight-edges, gauges and callipers which, with the iron gantry, are to be provided and maintained in proper condition for the purpose by the Manufacturer.

Permissible Variations in Thickness and Diameter of Special Castings.

19. The special castings shall be of the specified thickness and diameter subject to the working margins given below :—

(*a*) *Thickness of Body.*—The minimum thickness of the bodies of special castings shall not be less than the minimum thickness of the corresponding ordinary straight pipes (*see* Clause 16 (*a*)).

(*b*) *Diameters of Spigots and Sockets.*—The external diameters of the bodies of special castings for a distance of 6 inches from the spigot end, and the internal diameter of plain sockets of special castings, shall not depart from the diameters specified for straight pipes by more than the appropriate amounts in the following table :—

Nominal Internal Diameter of Pipe.	Diameter of Spigot for a distance of 6 in. from the Spigot end.		Diameter of Socket.	
	Permissible variation from specified diameter.		Permissible variation from specified diameter.	
	plus.	minus.	plus.	minus.
	in.	in.	in.	in.
Up to and including 16 in.	⅛	⅛	3/16	⅛
Above 16 in. to 48 in.	3/16	⅛	¼	3/16

Half Turned and Bored Joints.

20. In the case of spigot and socket pipes having half turned and bored joints, the spigots shall be accurately turned, and the sockets shall be accurately bored, and they shall be conical, having a

taper of 1/16 of an inch measured on the diameter per inch of length (*i.e.*, 1 in 32). When fitted tightly together the spigot end of each pipe shall have a clearance space as indicated by dimension Q in Tables 4 and 5 between it and the bottom of the socket of the pipe into which it is inserted. To test compliance with these conditions suitable coned gauges, to be approved by the Purchaser or his representative, shall be provided and applied by the Manufacturer to every pipe.

Length of Straight Pipes.

21. The standard effective lengths of straight pipes as laid shall be as follows :—

Nominal Internal Diameter of Pipe.	Length of Pipe.	
	Spigot and Socket Double Spigot.	Flanged.
in.	ft.	ft.
1½ and 2	6	8
2½ and 3	9	9
4 to 12 incl.	9 or 12 (as may be specified.)	9 or 12 (as may be specified.)
14 to 48 incl.	12	12

Permissible Variation in Length of Straight Pipes.

22. The lengths of the straight spigot and socket pipes shall be not more than ½ inch, and the lengths of the straight flange pipes not more than ⅛ inch under or over the standard lengths given in Clause 21.

Flanges.

23. The flanges shall be at right-angles to the axis of the pipe or branch and shall conform to the dimensions given in the appropriate B.S. Table of Pipe Flanges (B.S. 10—Part 1) as follows :—

Class of Pipe.	*B.S. Pipe Flange Table.*	
A	A	See Appendix A
B	B	
C	C	
D	C	

All circular bolt-holes shall be drilled. The flanges shall be truly faced over their full width. At the junction of the back of the

AVA Documents Document Sharing Hub

flange with the barrel of the pipe a fillet shall be formed which shall have as large a radius as possible without encroaching upon the bearing surface of the bolt heads or that of the washers under the nuts.

In double flanged straight pipes the holes in one flange shall be drilled in line with and opposite to the holes in the other.

Marking.*

24. Each pipe shall have cast upon it the appropriate Class Letter shown in the tables. The Class Letter shall be enclosed in brackets. In the case of spigot and socket pipes it shall be either upon or adjacent to the socket, and in the case of flange pipes it shall be upon the body of the pipe and adjacent to a flange. In the event of any pipe being rejected, the Purchaser's identification mark, if any, shall immediately be chipped off in the presence of the Purchaser or his representative, and the Class Letter shall be removed.

In addition to the Class Letter each pipe shall have cast on, and projecting from it, the initials or trade mark of the Manufacturer and the last two digits of the year of manufacture, *e.g.*, (B) X & Co. 38.

Special castings shall, in addition, have cast upon and projecting from them marks indicating :—

Bends, the nominal internal diameter and the angle contained by the bend as a fraction of the circle.

Tees, Crosses and Angle Branches, the nominal internal diameter of the main body and of the branch.

Tapers, the nominal internal diameter at each end.

Collars, Caps and Plugs, the nominal internal diameter of the pipes for which they are intended.

---

* NOTE.—If the Purchaser desires the pipes and fittings to be marked with the Mark of the British Standards Institution, he should so state with his enquiry and order.

The words "British Standard" and the device shown in the annexed sketch are registered marks of the British Standards Institution.

Only pipes and fittings satisfying the requirements of this Specification and made by Manufacturers licensed by the British Standards Institution may be marked with its Registered Marks and only by such Licensee.

The Registered Mark has always to be accompanied by the number of this Specification cast on the pipes and fittings, *e.g.*,

Particulars of the conditions under which Licences to use the Mark are granted can be obtained on application to the British Standards Institution, 28, Victoria Street, London, S.W.1.

The size of the marks shall be as set out in the following table :—

Nominal Internal Diameter of Pipe.	Length of Marks.	Projection of Marks.
	in.	in.
Under 3 in.	¾	⅛
3 in. and under 14 in.	1	⅛
14 in. ,, ,, 24 in.	1½	3/16
24 in. and over	2	3/16

Hydraulic Test.

25. Before being coated, the pipes shall be tested over the full length at the foundry by a competent workman, in the presence and to the satisfaction of the Purchaser or his representative, and they shall respectively withstand the following hydraulic test pressures without showing any leakage, sweating, or other defect :—

Class.	A	B	C	D
Test pressure in feet head ...	200	400	600	800

Special castings shall be tested to the same pressure as that to which the pipes with which they are to be used are subjected except in the case of Horsley syphons, which shall be subjected to the following test pressures :—

Nominal sizes of Horsley Syphons up to and including 12 in. diameter	140 ft. head.
Nominal sizes of Horsley Syphons above 12 in. diameter	90 ft. head.

The pressure shall be steadily applied by approved means and maintained sufficiently long for proof and inspection. The pipe conveying the pressure shall be fitted with a strong and accurate pressure gauge and provided with means for attaching the gauge of the Purchaser or of his representative.

While under the test pressure each pipe shall be smartly struck with a suitable hand hammer weighing not less than 1½ lb.

All straight pipes and, when practicable, special castings shall be tested under cover.

Document details: BS 78:1938
AVA Documentation
Document Sharing Hub

Coating.

26. Each pipe which has satisfactorily withstood the foregoing tests, and before it shall have become affected by rust, shall be coated in the following manner :—

The pipe shall be uniformly heated by being immersed vertically in hot water, the water being maintained at such a temperature, and the pipe being immersed so long, that the pipe dries immediately upon removal or, alternatively, the pipe shall be uniformly heated in a stove wherein the fumes of combustion do not come in contact with the pipe.

The hot pipe shall be thoroughly cleaned and then be coated by being properly dipped (except in the case of pipes which are to be only partially coated) in a bath containing a composition having a tar base, and maintained at a temperature between 290°F. and 330°F., the proportions of the ingredients of the composition being regulated so as to produce a coating of the quality hereinafter specified. When the pipe is removed from the bath it shall be properly drained, and the coating must fume freely and set hard within an hour.

On any pipes which are to be partially coated, the above composition, or other composition approved by the Purchaser, may be applied to the surfaces to be coated by a brush or other suitable means. The surfaces upon which coating is not required shall be entirely free from the composition.

In the case of pipes intended for gas, the coating shall, except when otherwise specified, be applied only to the exterior of the pipe, and shall be carried up to a distance from the spigot end equal to one and a half times the depth of the socket; the face of the socket shall not be coated.

The coating shall be such that it shall not impart taste to the water and shall be smooth, glossy and tenacious, sufficiently hard so as not to flow when exposed to a temperature of 145°F.* and not so brittle at a temperature of 32°F. as to chip off when scribed lightly with the point of a penknife.

Any pipe which is imperfectly coated, or the coating of which does not fume and set or conform to the quality as herein specified shall be re-coated.

The machined surfaces of all faced pipes and all pipes with turned and bored joints shall be thoroughly clean of the composition coating, and, before they have become affected by rust, shall be coated with a mixture of white lead and tallow or other approved protective composition.

* NOTE.—For pipes for use in, or transport through, a tropical country, a temperature of 170°F. shall apply.

Weighing and Marking of Weights.

27. Each pipe shall be weighed, and its weight distinctly marked thereon in oil paint and, wherever practicable, on the inside of the socket. Pipes under 5 inches in diameter may, unless otherwise specified, be weighed in batches of 15 cwt. (1,680 lb.) or thereabouts.

Permissible Deviation from Standard Weights.

28. The following variation in weight above or below the standard weights of the straight pipes given in Tables 2 and 3 shall be allowed :—

Nominal Internal Diameter of Pipe.	Permissible Variation, plus or minus.
in.	per cent.
1½ to 7	4
Over 7 to 16	3½
,, 16 to 24	3
,, 24 to 32	2½
,, 32 to 42	2
,, 42 to 48	1½

The following variations in weight above or below the standard weights† of Special Castings shall be allowed :—

Nominal Internal Diameter * of Special Casting.	Permissible Variations, plus or minus.
in.	per cent.
1½ to 7	4
Over 7 to 16	4½
,, 16 to 24	5
,, 24 to 32	6
,, 32 to 42	7
,, 42 to 48	7½

Defective Castings.

29. The stopping or repairing of pipes shall be prohibited.

† The weights have not been included in this issue (see Foreword).

* In the case of castings having more than one diameter, the allowance will be based on the largest diameter.

AVA Documents Document Sharing Hub

Inspection.

30. The Purchaser or his representative shall have free access to the foundry at all reasonable times, and shall be at liberty to inspect the manufacture at all stages. The charging of the cupola, the melting, drawing off, conveying and pouring of the metal shall be carried out in such a manner and at such time or times that the Purchaser or his representative may have every facility for seeing that the work is carried out in accordance with this Specification.

Maker's Certificate.

31. The Manufacturer shall on request supply to the Purchaser a signed certificate giving the result of the transverse, tensile and hydraulic tests specified in Clauses 8, 10 and 25 hereof, and certifying that the pipes comply in all respects with the provisions of this Specification. If the metal has been refined in a molten condition in a mixer of an active type this shall be stated in the certificate.

Rejection.

32. Should the metal used in casting any pipe not comply with the mechanical tests in Clauses 8 and 10, or with any of the other requirements laid down, or should any pipe not conform in all respects to the requirements of this Specification, such pipe shall be rejected.

Testing Facilities.

33. The Manufacturer, at his own expense, shall supply the necessary gauges, shall supply and prepare all transverse test bars and tensile test pieces and supply all labour and apparatus for testing which may be necessary or which may be required by the Purchaser for carrying out the tests and requirements of this Specification at the foundry. He shall also supply all transverse test bars and tensile test pieces for carrying out the independent tests provided for in Clause 7. If the Manufacturer shall fail to perform any of the foregoing obligations with regard to testing, the Purchaser shall be at liberty to carry out the requirements which the Manufacturer has failed to perform, either at the foundry or elsewhere, and charge the costs and expenses thereof to the Manufacturer.

TABLE 1.—STANDARD THICKNESSES AND EXTERNAL DIAMETERS FOR SPIGOT AND SOCKET AND FLANGE STRAIGHT PIPES.

Nominal Internal Diameter of Pipe.	GAS. Class A. Test Pressure 200 ft. hd.		WATER AND SEWAGE. Class B. Test Pressure 400 ft. hd.		Class C. Test Pressure 600 ft. hd.		Class D. Test Pressure 800 ft. hd.		Nominal Internal Diameter of Pipe.
	Thickness.	External Diameter.	Thickness.	External Diameter.	Thickness.	External Diameter.	Thickness.	External Diameter.	
in.	in.	in.	in.	in.	in.	in.	in.	in.	in.
1½	0·35	2·20	0·35	2·20	0·35	2·20	0·35	2.20	1½
2	0·36	2·72	0·36	2·72	0·36	2·72	0·36	2·72	2
2½	0·37	3·24	0·37	3·24	0·37	3·24	0·37	3·24	2½
3	0·38	3·76	0·38	3·76	0·38	3·76	0·40	3·76	3
4	0·39	4·80	0·39	4·80	0·40	4·80	0·46	4·80	4
5	0·41	5·90	0·41	5·90	0·45	5·90	0·52	5·90	5
6	0·43	6·98	0·43	6·98	0·49	6·98	0·57	6·98	6
7	0·45	8·06	0·45	8·06	0·53	8·06	0·61	8·06	7
8	0·47	9·14	0·47	9·14	0·57	9·14	0·65	9·14	8
9	0·49	10·20	0·49	10·20	0·60	10·20	0·69	10·20	9
10	0·52	11·26	0·52	11·26	0·63	11·26	0·73	11·26	10
12	0·55	13·14	0·57	13·14	0·69	13·60	0·80	13·60	12
14	0·57	15·22	0·61	15·22	0·75	15·72	0·86	15·72	14
15	0·59	16·26	0·63	16·26	0·77	16·78	0·89	16·78	15
16	0·60	17·30	0·65	17·30	0·80	17·84	0·92	17·84	16
18	0·63	19·38	0·69	19·38	0·85	19·96	0·98	19·96	18
20	0·65	21·46	0·73	21·46	0·89	22·06	1·03	22·06	20
21	0·67	22·50	0·75	22·50	0·92	23·12	1·06	23·12	21
22	0·68	23·54	0·77	23·54	0·94	24·16	1·08	24·16	22
24	0·71	25·60	0·80	25·60	0·98	26·26	1·13	26·26	24
26	0·74	27·66	0·83	27·66	1·02	28·36	1·18	28·36	26
27	0·75	28·70	0·85	28·70	1·04	29·40	1·20	29·40	27
28	0·76	29·72	0·86	29·72	1·06	30·44	1·22	30·44	28
30	0·79	31·78	0·89	31·78	1·09	32·52	1·26	32·52	30
32	0·82	33·84	0·92	33·84	1·13	34·62	1·31	34·62	32
33	0·83	34·88	0·94	34·88	1·15	35·66	1·33	35·66	33
36	0·87	37·96	0·98	37·96	1·20	38·76	1·38	38·76	36
38	0·90	40·02	1·01	40·02	1·23	40·84	1·42	40·84	38
39	0·91	41·04	1·02	41·04	1·25	41·88	1·44	41·88	39
40	0·92	42·06	1·03	42·06	1·26	42·92	1·46	42·92	40
42	0·95	44·12	1·06	44·12	1·30	45·00	1·50	45·00	42
44	0·98	46·16	1·08	46·16	1·33	47·06	1·53	47·06	44
45	0·99	47·18	1·09	47·18	1·35	48·10	1·55	48·10	45
46	1·00	48·22	1·11	48·22	1·36	49·14	1·57	49·14	46
48	1·03	50·26	1·13	50·26	1·38	51·20	1·60	51·20	48

Full document details: BS 78:1938
Documents
Document provided by IHS

STANDARD WEIGHTS OF STRAIGHT SPIGOT AND SOCKET PIPES.

Nominal Internal Diameter of Pipe.	GAS. Class A. Length (exclusive of Depth of Socket). 6 feet.	9 feet.	12 feet.	WATER AND SEWAGE. Class B. Length (exclusive of Depth of Socket). 6 feet.	9 feet.	12 feet.	Class C. Length (exclusive of Depth of Socket). 6 feet.	9 feet.	12 feet.	Class D. Length (exclusive of Depth of Socket). 6 feet.	9 feet.	12 feet.	Nominal Internal Diameter of Pipe.
	WEIGHTS.												
in.	cwt. qr. lb.	cwt. qr. lb.	cwt. qr. lb.	cwt. qr. lb.	cwt. qr. lb.	cwt. qr. lb.	cwt. qr. lb.	cwt. qr. lb.	cwt. qr. lb.	cwt. qr. lb.	cwt. qr. lb.	cwt. qr. lb.	in.
1½	– 1 19			– 1 19			– 1 19			– 1 19			1½
2	– 2 4			– 2 4			– 2 4			– 2 4			2
2½		– 3 21			– 3 21			– 3 21			– 3 21		2½
3		1 0 17	– – –		1 0 17	– – –		1 0 17	– – –		1 0 22	– – –	3
4		1 2 3	1 3 25		1 2 3	1 3 25		1 2 7	2 0 2		1 2 27	2 1 1	4
5		1 3 26	2 2 6		1 3 26	2 2 6		2 0 15	2 3 2		2 1 17	3 0 13	5
6		2 1 24	3 0 21		2 1 24	3 0 21		2 2 27	3 2 7		3 0 12	4 0 5	6
7		2 3 26	3 3 13		2 3 26	3 3 13		3 1 19	4 1 22		3 3 11	5 0 2	7
8		3 2 11	4 2 16		3 2 11	4 2 16		4 0 25	5 1 26		4 2 24	6 0 15	8
9		4 0 20	5 1 17		4 0 20	5 1 17		4 3 23	6 1 21		5 2 8	7 1 1	9
10		4 3 14	6 1 7		4 3 14	6 1 7		5 2 26	7 1 23		6 2 0	8 1 26	10
12		6 0 5	7 3 8		6 0 25	8 0 8		7 3 0	10 0 5		8 3 4	11 1 19	12
14			9 2 2			10 0 11			12 2 25			14 1 8	14
15			10 2 3			11 0 16			13 3 23			15 3 9	15
16			11 1 18			12 0 27			15 1 19			17 1 18	16
18			13 1 21			14 2 5			18 1 12			20 3 4	18
20			15 1 14			17 0 3			21 1 2			24 0 19	20
21			16 2 12			18 1 11			23 0 4			26 0 9	21
22			17 3 7			19 3 12			24 3 3			27 3 24	22
24			20 0 26			22 1 24			28 0 11			31 3 9	24
26			22 3 2			25 0 21			31 2 17			35 3 24	26
27			23 3 22			26 2 27			33 1 23			37 3 19	27
28			25 0 17			28 0 5			35 1 6			39 3 22	28
30			27 3 24			31 0 8			38 3 6			44 0 10	30
32			30 3 16			34 0 23			42 3 13			48 3 9	32
33			32 1 2			36 0 2			44 3 22			51 0 11	33
36			36 3 7			40 3 18			51 0 3			57 2 26	36
38			40 0 13			44 1 21			55 0 15			62 2 12	38
39			41 2 11			46 0 4			57 1 27			65 0 19	39
40			43 0 14			47 2 19			59 1 18			67 2 21	40
42			46 2 21			51 1 24			64 1 5			72 3 26	42
44			50 48 1 14			54 3 21			68 3 12			77 3 24	44
45			52 0 7			56 2 23			71 1 23			80 3 1	45
46			53 3 2			58 3 27			73 2 13			83 2 13	46
48			57 2 26			62 2 21			77 3 22			88 3 14	48

Full document details: BS 78:1938
AVA Documents
Document Sharing Hub

STANDARD WEIGHTS OF STRAIGHT FLANGED PIPES.

Nominal Internal Diameter of Pipe.	GAS. Class A. Length (from Flange Face to Flange Face). 6 feet.	9 feet.	12 feet.	WATER AND SEWAGE. Class B. Length (from Flange Face to Flange Face). 6 feet.	9 feet.	12 feet.	Class C. Length (from Flange Face to Flange Face). 6 feet.	9 feet.	12 feet.	Class D. Length (from Flange Face to Flange Face). 6 feet.	9 feet.	12 feet.	Nominal Internal Diameter of Pipe.
	WEIGHTS.												
in.	cwt. qr. lb.	cwt. qr. lb.	cwt. qr. lb.	cwt. qr. lb.	cwt. qr. lb.	cwt. qr. lb.	cwt. qr. lb.	cwt. qr. lb.	cwt. qr. lb.	cwt. qr. lb.	cwt. qr. lb.	cwt. qr. lb.	in.
1½	– 1 15			– 1 15			– 1 15			– 1 15			1½
2	– 2 0			– 2 0			– 2 1			– 2 1			2
2½		– 3 16			– 3 16			– 3 17			– 3 17		2½
3		1 0 9	– – –		1 0 10	– – –		1 0 10	– – –		1 0 15	– – –	3
4		1 1 23	1 3 17		1 1 23	1 3 17		1 2 1	1 3 24		1 2 21	2 0 23	4
5		1 3 18	2 1 27		1 3 19	2 2 0		2 0 10	2 2 25		2 1 12	3 0 8	5
6		2 1 16	3 0 12		2 1 14	3 0 11		2 2 19	3 1 27		3 0 4	3 3 26	6
7		2 3 13	3 3 0		2 3 15	3 3 1		3 2 11	4 1 15		3 3 3	4 3 22	7
8		3 1 19	4 1 25		3 1 19	4 1 25		4 0 10	5 1 11		4 2 9	6 0 0	8
9		4 0 0	5 0 25		4 0 0	5 0 25		4 3 7	6 1 5		5 1 21	7 0 14	9
10		4 2 25	6 0 19		4 3 1	6 0 22		5 2 13	7 1 10		6 1 15	8 1 12	10
12		5 3 10	7 2 13		6 0 5	7 3 16		7 1 17	9 2 22		8 1 20	11 0 8	12
14		7 0 15	9 1 4		7 2 15	9 3 20		9 1 21	12 1 9		10 2 15	13 3 20	14
15		7 3 14	10 1 1		8 1 17	10 3 21		10 1 8	13 2 0		11 2 25	15 1 13	15
16		8 2 3	11 0 12		9 0 21	11 3 25		11 1 13	14 3 14		12 3 13	16 3 13	16
18		10 0 8	13 0 13		11 0 9	14 1 17		13 2 18	17 3 11		15 1 26	20 1 3	18
20		11 2 16	15 0 14		13 0 0	16 3 17		15 3 27	20 3 10		18 0 19	23 2 27	20
21		12 2 11	16 1 13		14 0 19	18 1 13		17 1 10	22 2 11		19 2 14	25 2 16	21
22		13 1 18	17 1 19		15 0 16	19 2 18		18 1 23	24 0 9		20 3 11	27 1 2	22
24		15 1 4	19 3 10		17 0 22	22 1 6		21 0 17	27 2 3		23 3 22	31 1 1	24
26		16 3 8	21 3 22		19 1 11	25 0 9		23 3 6	30 3 26		27 0 4	35 1 5	26
27		17 2 19	23 0 7		20 2 10	26 2 21		25 0 24	32 3 7		28 2 8	37 1 4	27
28		18 1 27	24 0 18		21 2 24	28 0 11		26 3 0	34 3 2		30 0 26	39 1 17	28
30		20 1 26	26 3 4		24 0 15	31 0 24		29 1 27	38 1 7		33 1 23	43 2 11	30
32		22 2 18	29 2 15		26 2 17	34 1 22		32 2 15	42 1 14		37 0 12	48 1 11	32
33		23 2 13	30 3 16		28 0 11	36 1 7		34 1 24	44 2 21		39 0 9	50 3 9	33
36		27 0 0	35 1 6		32 0 9	41 1 18		39 0 5	50 2 17		44 0 8	57 1 13	36
38		29 1 12	38 1 19		34 2 22	44 3 11		42 1 7	54 3 12		47 3 19	62 1 9	38
39		30 1 18	39 3 7		36 0 5	46 2 6		44 0 27	57 1 7		49 3 27	64 3 27	39
40		31 1 26	41 0 26		37 1 0	48 0 15		45 2 10	59 0 12		51 3 5	67 1 15	40
42		33 3 26	44 2 5		40 1 10	52 0 10		49 1 11	63 3 25		55 3 13	72 2 19	42
44		36 3 22	46 1 9		43 0 8	55 2 12		52 3 12	68 2 2		59 2 21	77 2 14	44
45		38 0 14	49 3 16		44 2 27	57 2 17		55 0 [illegible]	71 1 6		62 0 4	80 2 13	45
46		39 1 7	51 1 25		46 1 19	59 3 15		56 2 [illegible]	73 1 1		64 0 3	83 1 1	46
48		42 0 12	55 0 18		49 0 14	63 1 20		59 2 17	77 1 11		67 3 11	88 1 3	48

Full document: Report: BS 78:1938
AVA Documents
Document Sharing Hub

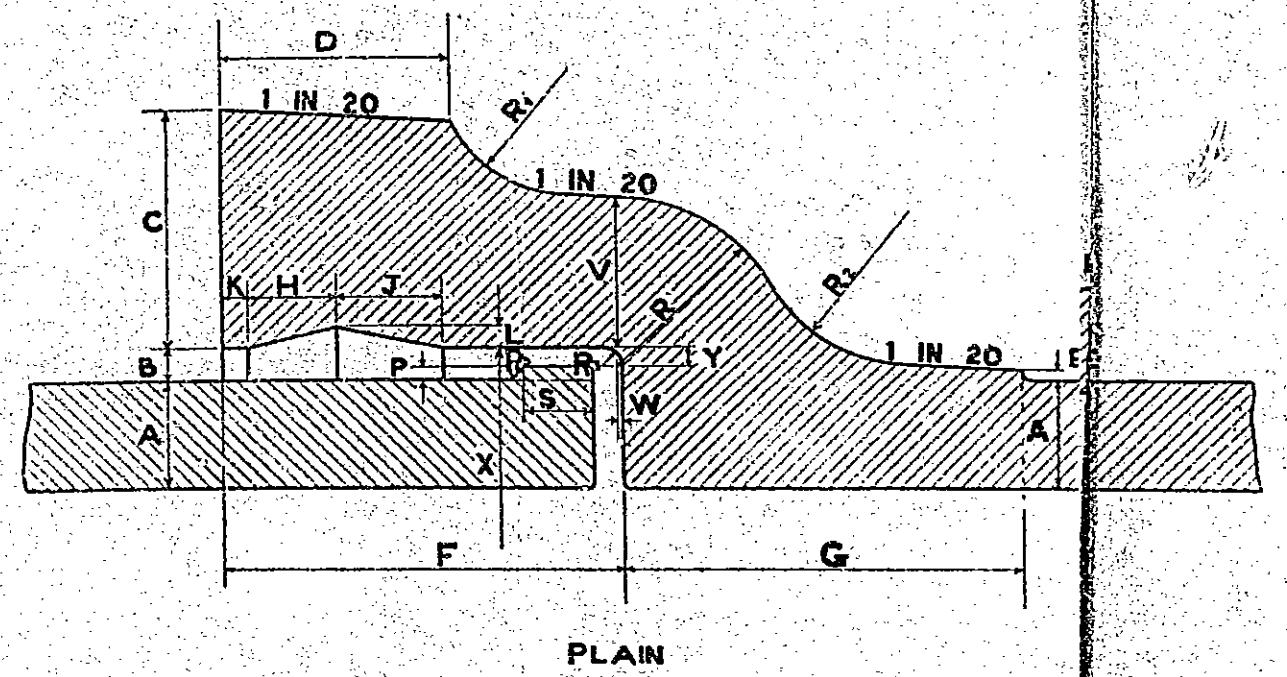

PLAIN

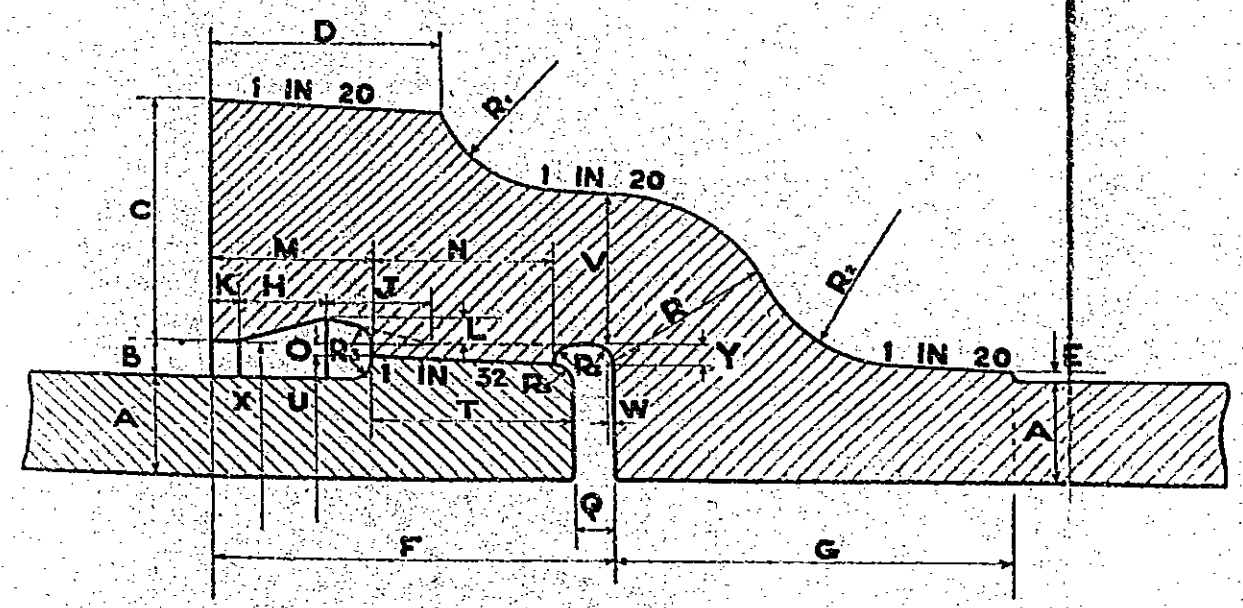

HALF TURNED AND BORED.

Nominal Intern Diameter of Pi	
A	Test Head
	Test Head
C	
D	
F, G	
H	
J	
M	
N	
O	
Q*	
R	
R_1	
R_2	
S	
T	
U	
V	
X	

AVA Documents
Document Sharing Site

DIMENSIONS OF STANDARD SPIGOT AND SOCKETS. CLASSES A AND B.

All dimensions are in inches.

Nominal Internal Diameter of Pipe.		1½	2	2½	3	4	5	6	7	8	9	10	12	14	15	16	18	20	21	22	24	26	27	28	30	32	33	36	38	39	40	42	44	45	46	48
A	Test Head 200 ft.	0·35	0·36	0·37	0·38	0·39	0·41	0·43	0·45	0·47	0·49	0·52	0·55	0·57	0·59	0·60	0·63	0·65	0·67	0·68	0·71	0·74	0·75	0·76	0·79	0·82	0·83	0·87	0·90	0·91	0·92	0·95	0·98	0·99	1·00	1·03
	Test Head 400 ft.	0·35	0·36	0·37	0·38	0·39	0·41	0·43	0·45	0·47	0·49	0·52	0·57	0·61	0·63	0·65	0·69	0·73	0·75	0·77	0·80	0·82	0·94	0·98	1·01	1·02	1·03	1·06	1·08	1·09	1·11	1·13	1·16	1·17	1·19	1·21
C		0·95	0·97	1·00	1·04	1·09	1·11	1·15	1·18	1·24	1·26	1·29	1·40	1·50	1·54	1·58	1·65	1·73	1·76	1·82	1·89	1·95	1·99	2·02	2·08	2·14	2·18	2·27	2·34	2·36	2·39	2·45	2·51	2·54	2·57	2·63
D		1·20	1·22	1·25	1·29	1·34	1·36	1·40	1·43	1·50	1·51	1·54	1·65	1·75	1·79	1·83	1·90	1·98	2·01	2·07	2·14	2·20	2·24	2·27	2·33	2·39	2·43	2·52	2·59	2·61	2·64	2·70	2·76	2·79	2·82	2·88
E, G		3·00	3·00	3·00	3·50	3·50	3·50	3·50	3·50	4·00	4·00	4·00	4·00	4·50	4·50	4·50	4·50	4·50	4·50	5·00	5·00	5·00	5·00	5·00	5·00	5·00	5·00	5·00	5·00	5·00	5·00	5·00	5·00	5·00	5·00	5·00
H		0·30	0·30	0·30	0·36	0·36	0·36	0·42	0·42	0·48	0·48	0·51	0·51	0·55	0·61	0·61	0·67	0·73	0·73	0·80	0·80	0·86	0·86	0·86	0·92	0·92	0·92	0·98	0·98	1·05	1·05	1·05	1·11	1·11	1·11	1·11
J		0·50	0·50	0·50	0·50	0·56	0·56	0·63	0·63	0·69	0·69	0·72	0·72	0·75	0·81	0·81	0·88	0·94	0·94	1·00	1·00	1·06	1·06	1·06	1·13	1·13	1·13	1·19	1·19	1·25	1·25	1·25	1·31	1·31	1·31	1·31
M		1·25	1·25	1·25	1·25	1·38	1·38	1·38	1·38	1·63	1·63	1·63	1·63	1·88	1·88	1·88	1·88	1·88	1·88	2·00	2·00	2·00	2·00	2·00	2·00	2·00	2·00	2·00	2·00	2·00	2·00	2·00	2·00	2·00	2·00	2·00
N		1·25	1·25	1·25	1·38	1·38	1·38	1·38	1·38	1·50	1·50	1·63	1·63	1·88	1·88	1·88	1·88	2·25	2·25	2·25	2·25	2·25	2·25	2·25	2·25	2·25	2·25	2·25	2·25	2·25	2·25	2·25	2·25	2·25	2·25	2·25
O		0·13	0·13	0·13	0·13	0·13	0·13	0·13	0·13	0·13	0·13	0·13	0·13	0·13	0·17	0·17	0·17	0·16	0·16	0·16	0·16	0·16	0·16	0·16	0·16	0·16	0·16	0·16	0·16	0·16	0·16	0·16	0·16	0·16	0·16	0·16
Q*	Min.	0·38	0·38	0·38	0·38	0·38	0·38	0·38	0·38	0·50	0·50	0·50	0·50	0·50	0·50	0·50	0·50	0·50	0·50	0·63	0·63	0·63	0·63	0·63	0·63	0·63	0·63	0·63	0·63	0·63	0·63	0·63	0·63	0·63	0·63	0·63
	Max.	0·63	0·63	0·63	0·63	0·63	0·63	0·63	0·63	0·75	0·75	0·75	0·75	0·75	0·75	0·75	0·75	0·75	0·75	0·88	0·88	0·88	0·88	0·88	0·88	0·88	0·88	0·88	0·88	0·88	0·88	0·86	0·88	0·88	0·88	0·88
R		0·84	0·86	0·89	0·91	0·96	0·98	1·02	1·05	1·08	1·10	1·13	1·18	1·22	1·24	1·26	1·30	1·34	1·36	1·38	1·41	1·44	1·46	1·47	1·50	1·53	1·55	1·59	1·62	1·63	1·64	1·67	1·69	1·70	1·72	1·74
R_1		0·75	0·75	0·75	1·00	1·00	1·00	1·00	1·00	1·13	1·13	1·13	1·13	1·19	1·19	1·19	1·19	1·25	1·25	1·25	1·25	1·38	1·38	1·38	1·38	1·38	1·38	1·50	1·50	1·50	1·50	1·50	1·63	1·63	1·63	1·63
R_2		0·65	0·67	0·70	0·72	0·77	0·79	0·83	0·86	0·89	0·91	0·94	0·99	1·03	1·05	1·07	1·11	1·15	1·17	1·19	1·22	1·25	1·27	1·28	1·31	1·34	1·36	1·40	1·43	1·44	1·45	1·48	1·50	1·51	1·53	1·55
S		0·63	0·63	0·63	0·69	0·69	0·69	0·75	0·75	0·75	0·75	0·75	0·75	0·88	0·88	0·88	0·88	1·00	1·00	1·00	1·00	1·00	1·00	1·00	1·00	1·00	1·00	1·00	1·00	1·00	1·00	1·00	1·00	1·00	1·00	1·00
T		1·25	1·25	1·25	1·25	1·25	1·63	1·63	1·63	1·75	1·75	1·75	1·75	2·00	2·00	2·00	2·00	2·00	2·00	2·00	2·00	2·00	2·00	2·00	2·00	2·00	2·00	2·00	2·00	2·00	2·00	2·00	2·00	2·00	2·00	2·00
U		2·70	3·22	3·74	4·26	5·30	6·40	7·48	8·56	9·64	10·70	11·76	13·64	15·72	16·76	17·80	19·92	22·00	23·04	24·11	26·17	28·23	29·27	30·29	32·35	34·41	35·45	38·53	40·59	41·61	42·63	44·69	46·73	47·74	48·79	50·83
V		0·59	0·61	0·64	0·66	0·71	0·73	0·77	0·80	0·83	0·85	0·88	0·93	0·97	0·99	1·01	1·05	1·09	1·11	1·13	1·16	1·19	1·21	1·22	1·25	1·28	1·30	1·34	1·37	1·38	1·39	1·42	1·44	1·45	1·47	1·49
X		2·96	3·48	4·00	4·52	5·56	6·66	7·74	8·82	9·90	10·96	12·02	13·90	15·98	17·02	18·06	20·26	22·34	23·38	24·42	26·48	28·54	29·58	30·60	32·66	34·72	35·76	38·84	40·90	41·92	42·94	45·00	47·04	48·06	49·10	51·14

B				E	K	L		P	R_3	W	Y
1½ to 16 = 0·38				0·13	0·33	1½ to 16 = 0·13		0·19	0·25	0·06	0·25
17 to 48 = 0·44						17 to 48 = 0·25					

* The limits of tolerance for machining of the turned portions of the spigot and socket shall be such that the permissible variation in the dimension Q shall be divided equally between the spigot and the socket.

AVA Documents
Document Sharing Hub

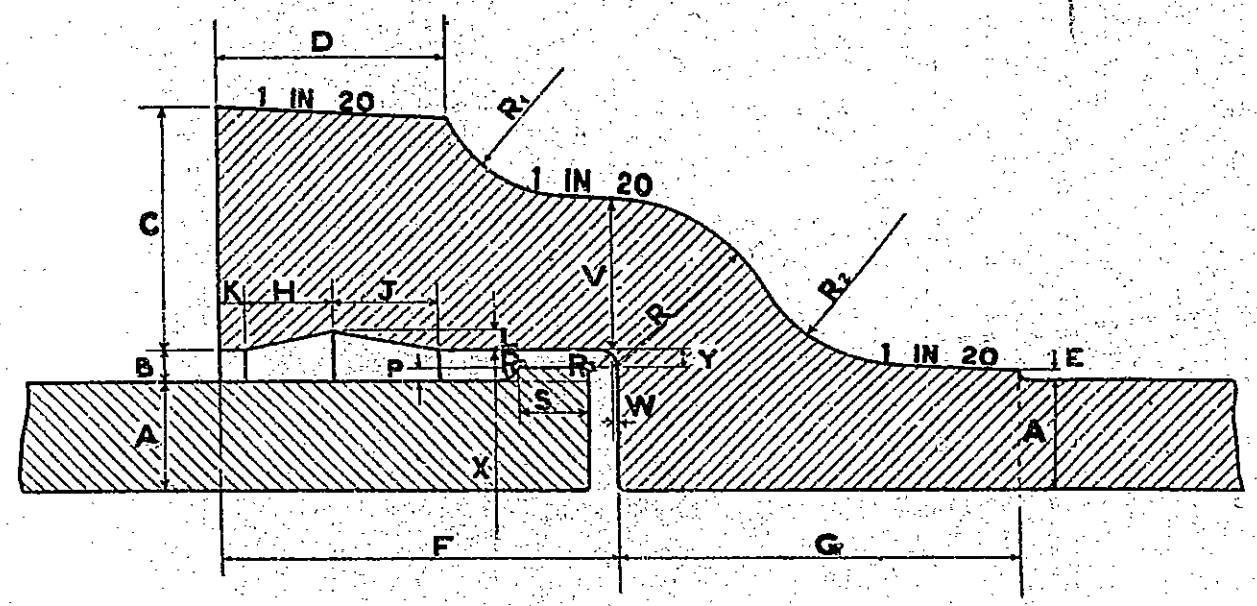

PLAIN

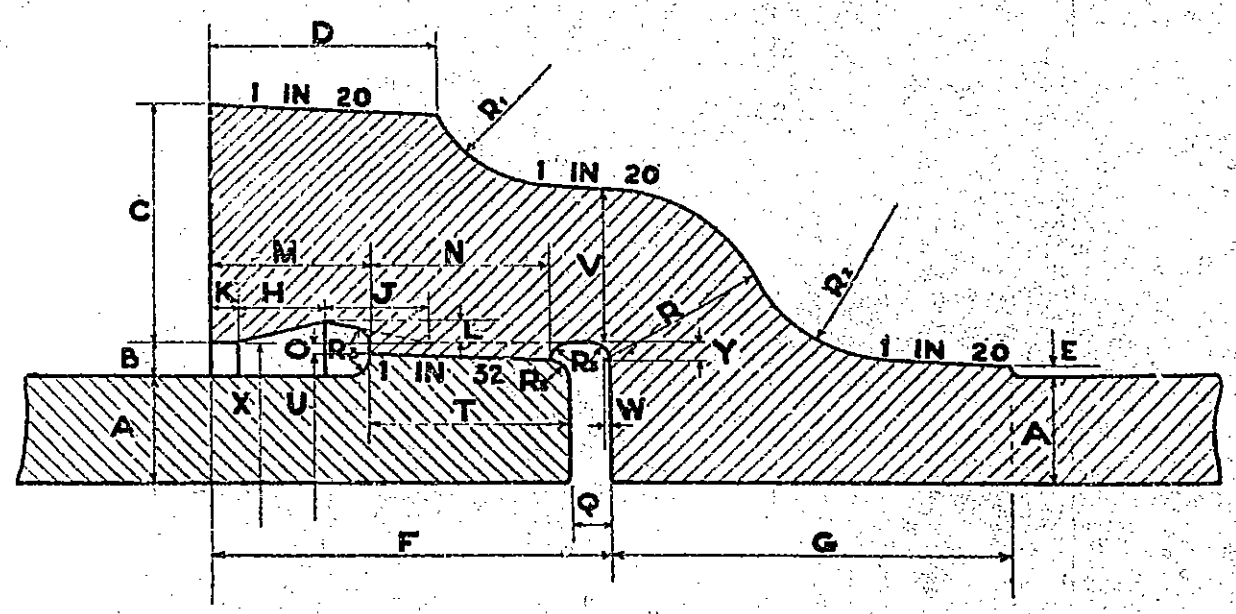

HALF TURNED AND BORED.

Nominal Internal Diameter of Pipe.		1½	2	2½	3	4	5	6
A	Test Head 600 ft.	0·35	0·36	0·37	0·38	0·40	0·45	0·49
	Test Head 800 ft.	0·35	0·36	0·37	0·40	0·46	0·52	0·57
C		0·95	0·97	1·00	1·04	1·09	1·11	1·15
D		1·20	1·22	1·25	1·29	1·34	1·36	1·40
F, G		3·00	3·00	3·00	3·50	3·50	3·50	3·50
H		0·30	0·30	0·30	0·36	0·36	0·36	0·42
J		0·50	0·50	0·50	0·56	0·56	0·56	0·63
M		1·25	1·25	1·25	1·38	1·38	1·38	1·38
N		1·25	1·25	1·25	1·38	1·38	1·38	1·38
O		0·13	0·13	0·13	0·13	0·13	0·13	0·13
Q*	Min.	0·38	0·38	0·38	0·38	0·38	0·38	0·38
	Max.	0·63	0·63	0·63	0·63	0·63	0·63	0·63
R		0·84	0·86	0·89	0·91	0·96	0·98	1·02
R_1		0·75	0·75	0·75	1·00	1·00	1·00	1·00
R_2		0·65	0·67	0·70	0·72	0·77	0·79	0·83
S		0·63	0·63	0·63	0·69	0·69	0·69	0·75
T		1·25	1·25	1·25	1·25	1·25	1·63	1·63
U		2·70	3·22	3·74	4·26	5·30	6·40	7·48
V		0·59	0·61	0·64	0·66	0·71	0·73	0·77
X		2·96	3·48	4·00	4·52	5·56	6·66	7·74

* The limits of tolerance for machining of th

AVA Documents
Document Sharing Hub