bsi.

...making excellence a habit.™

Please be aware that this PDF has been created from the original hardcopy document, which might not be in good condition and so the PDF might reflect this.

BSI Group
389 Chiswick High Road
London, W4 4AL
United Kingdom

T: +44 20 845 086 9001
F: +44 20 8996 7400
cservices@bsigroup.com
bsigroup.com

British Standards Limited
Registered in England no: 07864997
Registered address: 389 Chiswick High Road
London, W4 4AL, United Kingdom

AVA Documents
INVESTORS IN PEOPLE
Document Sharing Hub

Full document details: BS 864:1953

Room 403
~~A. Watkins~~
+ 4 AND

w/d 1/11/75 W D

BRITISH STANDARD 864: 1953

CAPILLARY AND COMPRESSION FITTINGS

OF COPPER & COPPER ALLOY

FOR USE WITH COPPER TUBE COMPLYING

WITH B.S. 659 AND B.S. 1386

BRITISH STANDARDS INSTITUTION
LIBRARY
PARK STREET, LONDON, W.1

BRITISH STANDARDS INSTITUTION

Full document details: BS 864:1953
AVA Documents
Document Sharing Hub

full document details: BS 864:1953

BRITISH STANDARD SPECIFICATION

CAPILLARY AND COMPRESSION FITTINGS

OF COPPER AND COPPER ALLOY FOR USE WITH COPPER TUBE COMPLYING WITH B.S. 659 AND B.S. 1386

B.S. 864 : 1953

Price 4/- net

BRITISH STANDARDS INSTITUTION

INCORPORATED BY ROYAL CHARTER

BRITISH STANDARDS HOUSE, 2 PARK ST., LONDON, W.1

TELEGRAMS: STANDARDS, AUDLEY, LONDON TELEPHONE: MAYFAIR 9000

AVA Documents
Document Sharing Hub

THIS BRITISH STANDARD having been approved by the Mechanical Engineering Industry Standards Committee and endorsed by the Chairman of the Engineering Divisional Council, was published under the authority of the General Council on 15th December, 1953.

First published, August, 1939
First revision, June, 1945
Second revision, December, 1953

The Institution desires to call attention to the fact that this British Standard does not purport to include all the necessary provisions of a contract.

In order to keep abreast of progress in the industries concerned, British Standards are subject to periodical review. Suggestions for improvements will be recorded and in due course brought to the notice of the committees charged with the revision of the standards to which they refer.

A complete list of British Standards, numbering over 2000, indexed and cross-indexed for reference, together with an abstract of each standard, will be found in the Institution's Yearbook, price 12s. 6d.

This standard makes reference to the following British Standards :—

B.S. 21. Pipe threads. Part 1 : Basic sizes and tolerances.
B.S. 61 : Part 2 : Screw threads for copper tubes.
B.S. 84. Screw threads of Whitworth form.
B.S. 219. Soft solders.
B.S. 659. Light gauge copper tubes for water, gas and sanitation.
B.S. 1010. Draw-off taps and stopvalves for water services.
B.S. 1386. Copper tubes to be buried underground.

British Standards are revised, when necessary, by the issue either of amendment slips or of revised editions. It is important that users of British Standards should ascertain that they are in possession of the latest amendments or editions.

MEE/46

CONTENTS

	Page
Co-operating organizations	4
Foreword	5
SPECIFICATION	
SECTION ONE : GENERAL REQUIREMENTS	
1. Scope	7
2. Definition	7
3. Designation of sizes of fittings	7
4. Screwed ends of fittings (other than for copper)	8
5. Material	8
6. Components made from castings, hot pressings or drawn tube	8
7. Dimensions	10
8. Bore of fitting	10
9. Hydraulic 'type' test for assembled joint	10
10. Porosity test	10
11. Marking	12
SECTION TWO : CAPILLARY FITTINGS	
12. Scope	14
13. Type of fittings	14
14. Design and construction	14
SECTION THREE : COMPRESSION FITTINGS, TYPE A	
15. Scope	16
16. Type of fittings	16
17. Design and construction	16
SECTION FOUR : COMPRESSION FITTINGS, TYPE B	
18. Scope	17
19. Type of fittings	17
20. Design and construction	17
APPENDICES	
A. Methods of specifying fittings	20
B. Fittings for use with copper tubes to be buried underground, B.S. 1386	23
C. B.S.P. (parallel) threads (external) ; limits and tolerances (free fit)	24
D. B.S.P. (parallel) threads (internal) ; limits and tolerances (free fit)	25
E. Copper tubes for water and gas	26
F. Copper tubes to be buried underground	27

Full document details: BS 864:1953
AVA Documents
Document Sharing Hub

CO-OPERATING ORGANIZATIONS

The Mechanical Engineering Industry Standards Committee, under whose supervision this British Standard was prepared, consists of representatives from the following Government Departments and scientific and industrial organizations :—

Admiralty
Air Ministry
Associated Offices Technical Committee
Association of Consulting Engineers (Incorporated)
British Chemical Plant Manufacturers' Association
*British Compressed Air Society
British Electrical and Allied Manufacturers' Association
British Electricity Authority and Area Boards
British Engineers' Association
*British Internal Combustion Engine Manufacturers' Association
British Iron and Steel Federation
British Railways, The British Transport Commission
Crown Agents for the Colonies
D.S.I.R.—Mechanical Engineering Research Laboratory
Engineering Equipment Users' Association
Gas Council
High Commission of India
Institute of Marine Engineers
Institute of Petroleum
Institution of Civil Engineers
*Institution of Gas Engineers
*Institution of Heating and Ventilating Engineers
Institution of Mechanical Engineers
Institution of Mechanical Engineers (Automobile Division)
Institution of Production Engineers
Locomotive Manufacturers' Association
Machine Tool Trades Association
Ministry of Fuel and Power
Ministry of Labour and National Service (Factory Department)
Ministry of Supply
Ministry of Transport
*Ministry of Works
National Physical Laboratory
Radio Industry Council
War Office

The Government department and scientific and industrial organizations marked with an asterisk in the above list, and the following scientific and industrial organizations were directly represented on the committee entrusted with the preparation of this standard :—

British Waterworks' Association
Copper Development Association
Copper Tube Fittings Manufacturers' Association
Hydraulic Association
Institution of Municipal Engineers
London Transport Executive
Metropolitan Water Board
Ministry of Housing and Local Government
National Brassfoundry Association
Royal Sanitary Institute
Society of Motor Manufacturers and Traders
Individual manufacturers

BRITISH STANDARD SPECIFICATION FOR

CAPILLARY AND COMPRESSION FITTINGS

OF COPPER AND COPPER ALLOY FOR USE WITH COPPER TUBE COMPLYING WITH B.S. 659 AND B.S. 1386

FOREWORD

This revised British Standard supersedes B.S. 864 : 1945.

The standard was first published in 1939 and was revised in 1945. It relates to the following three types of tube fittings of copper and copper alloy for use in conjunction with copper tube complying with B.S. 659, 'Light gauge copper tubes for water, gas and sanitation', and with B.S. 1386, 'Copper tubes to be buried underground'.

a. Capillary fittings, in which the joint is made by the flow of solder by capillarity along the annular space between the outside of the tube and the inside of the socket of the fitting, the size of this annular space being dimensionally accurate within close limits.

b. Compression fittings, Type 'A', in which the joint is made by the compression of a loose ring or sleeve, or part of the fitting, on to the outside wall of the tube.

c. Compression fittings, Type 'B', in which the joint is made by the compression of a manipulated portion of the tube at or near its end against the face of the body of the fitting or against a loose ring or sleeve within the fitting.

Where Type 'A' compression fittings are to be used with tubes in soft temper, reference should be made to the manufacturer to ensure that the make of fitting is suitable for this application. Regard should be had to the provisions of Appendix B in all cases where the joint is to be buried underground.

This standard does not attempt the complete dimensional standardization of any of these types of fitting, since the variety in the designs and methods of production already established by the various manufacturers makes any such attempt impracticable. It does, however, specify such dimensions and requirements as are essential to ensure satisfactory installation and performance.

The other British Standards dealing with copper and copper alloy pipe fittings are :

B.S. 66. Copper-alloy three-piece unions (for low and medium pressure screwed copper tubes).

B.S. 99. Copper-alloy pipe fittings screwed for low- and medium-pressure B.S. copper tubes.

Full document details: BS 864:1953
AVA Documents
Document Sharing Hub

B.S. 143. Malleable cast iron and cast copper alloy pipe fittings for steam, air, water, gas and oil. Screwed B.S.P. taper thread or API line pipe thread.

B.S. 1256. Malleable cast iron (Whiteheart process) and cast copper alloy pipe fittings for steam, air, water, gas and oil. Screwed B.S.P. taper male thread and parallel female thread.

B.S. 2051. Part 1 : Copper and copper alloy capillary and compression tube fittings (for fractional O.D. sizes of tubes) for engineering purposes.

B.S. 2051. Part 2 : Olive, soldered nipple and flared types of copper and copper alloy tube fittings for engineering purposes.

Steel compression pipe fittings are covered in B.S. 2051, Part 3*, and Steel nipple pipe fittings for brazing (Unified threads and Unified hexagons) are covered in B.S. 2051, Part 4*.

The following appendices have been included :

Appendix A. Methods of specifying fittings.

Appendix B. Fittings for use with copper tubes to be buried underground, (B.S. 1386).

Appendix C. Limits and tolerances for B.S. pipe (parallel) threads. Male threads—free fit (extracted from B.S. 84, ' Screw threads of Whitworth form ').

Appendix D. Limits and tolerances for B.S. pipe (parallel) threads. Female threads—free fit (extracted from B.S. 84, ' Screw threads of Whitworth form ').

Appendix E. Copper tubes for water and gas (extracted from B.S. 659, ' Light gauge copper tubes ').

Appendix F. Copper tubes to be buried underground (extracted from B.S. 1386, ' Copper tubes to be buried underground ').

* In course of preparation.

SPECIFICATION

SECTION ONE : GENERAL REQUIREMENTS

SCOPE

1. This standard relates to capillary fittings and compression fittings for use with copper tubes complying with B.S. 659* and/or B.S. 1386.† It applies to the most commonly used types of fittings of nominal sizes ranging from ⅛ in. to 2½ in. inclusive. It does not apply to fittings used in waste systems.

The fittings when assembled with tubing complying with B.S. 659 and/or B.S. 1386, and in accordance with the manufacturer's instructions, shall be suitable for the working water pressures and temperatures specified in Table 1.

TABLE 1. MAXIMUM WORKING TEMPERATURES AND PRESSURES

Maximum working temperature	Maximum working pressures			
	Fittings 2 in. and smaller		2½ in. fittings	
	lb/sq. in.	feet head	lb/sq. in.	feet head
Cold water	200	461	150	346
Hot water up to :				
200°F.	100	231	75	173
250°F.	75	173	50	115

NOTE. Capillary fittings assembled with high melting point solders, and certain designs and sizes of compression fittings, are suitable for use at higher temperatures and pressures than are given in the above table and also for low pressure steam services. For such applications the manufacturer of the fittings should be consulted.

DEFINITION

2. For the purposes of this British Standard a 'fitting' shall mean any device used in a light gauge copper tube system for the purpose of connecting the tubes either to each other or to a component part of a system.

DESIGNATION OF SIZES OF FITTINGS

3. The size by which the fitting is designated shall be the nominal size of the tube, in accordance with B.S. 659 and/or B.S. 1386, with which it is to be used. The method of specifying the sizes of fittings shall be in accordance with Appendix A.

* B.S. 659, ' Light gauge copper tubes for water, gas and sanitation '.

† B.S. 1386, ' Copper tubes to be buried underground '.

Full document details: BS 864:1953
AVA Documents
Document Sharing Hub

SCREWED ENDS OF FITTINGS (OTHER THAN FOR COPPER)

4. The screwed ends of fittings (other than for copper) i.e. connector-ends, external and internal, as in Figures 1a, 1b, 2a and 2b shall, unless otherwise ordered in accordance with this clause, be B.S.P. (parallel) threads in accordance with B.S. 84, Tables 20 and 21, 'B.S.P. (parallel) threads, '*free fit*', but only those sizes set out in Appendices C or D of this standard shall be used. On external threads the first thread shall be chamfered.

The internal threads shall be chamfered at the face of the fitting to an included angle of 90°, not more than 1 thread deep.

The dimensions of the parallel threaded ends, external and internal B.S.P., shall be in accordance with Table 2.

In fittings with parallel threads, the faces designated A and B in Figs. 1a, 1b, 2a and 2b shall be smoothly machined at right angles to the axis of the thread.

When so ordered, the screwed ends of fittings (other than for copper), external and internal, shall be screwed with any of the following forms of screw threads :—

a. B.S.P. (taper) threads, in accordance with B.S. 21, *or*,

b. Screw threads for copper tubes, in accordance with B.S. 61, Part 2, *or*,

c. Special screw threads, provided that the minimum thicknesses laid down in Table 7, Columns 4 and 7 are not reduced.

MATERIAL

5. Unless otherwise specified, the fittings shall be of copper or a suitable corrosion-resisting copper alloy.

For flange type fittings of 2 in. size and above, loose flanges and bolts may be of ferrous material, by agreement between the purchaser and the manufacturer. Ferrous flanges shall be adequately protected against corrosion.

NOTE. The solder used for making capillary joints should be that recommended by the manufacturer of the fittings, provided it is not inferior to Grades C and G as specified in B.S. 219, 'Soft solders'.

COMPONENTS MADE FROM CASTINGS, HOT PRESSINGS OR DRAWN TUBE

6. *a. Castings.* Castings shall be in all respects sound, free from laps, blow holes and pitting, and both the external and internal surfaces shall be clean, smooth and free from sand.

They shall be neatly dressed and no casting shall be burned, plugged, stopped or patched.

b. Hot pressings. Hot-pressed components shall be sound and solid, without laminations, and shall be smooth and well finished.

c. Drawn tube. Drawn tube components shall be sound and solid, without laminations, and shall be smooth and well finished.

TABLE 2. STANDARD THREADED ENDS (SEE CLAUSE 4) (PARALLEL THREADS)

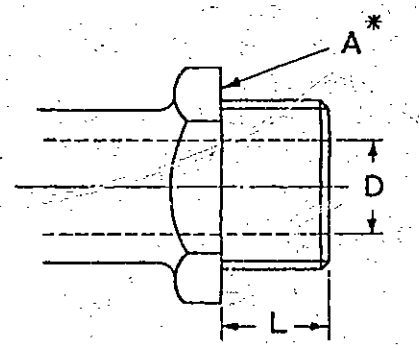

Fig. 1a

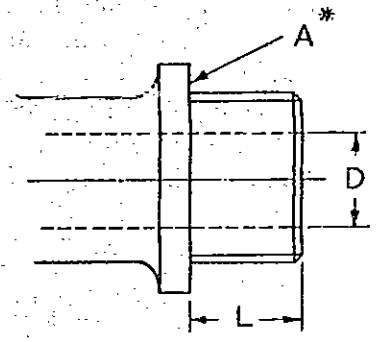

Fig. 1b. Alternative end

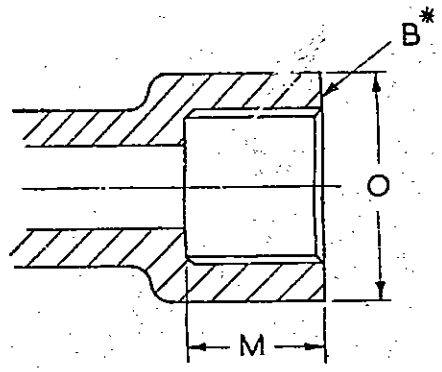

Fig. 2a

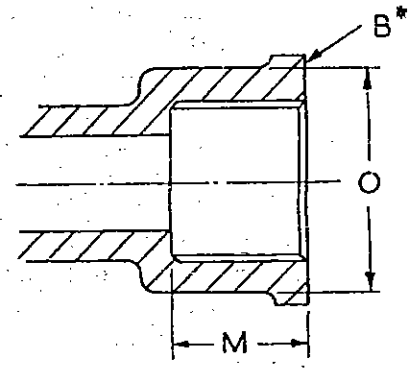

Fig. 2b. Alternative end

* See Clause 4 regarding the faces designated A and B.

NOTE. These illustrations are diagrammatic only; they do not purport to indicate standard forms or shapes and are solely for the purpose of indicating where the specified dimensions are to be measured.

1	2	3	4	5	6	7	8	9	10	11
Nom. size of fitting	B.S.P. thread (B.S. 84)	D (Bore diameter)				L		M	O	
		Hot pressing		Casting		Max.	Min.	Min.	Hot pressing	Casting
		Max.	Min.	Max.	Min.				Min.	Min.
in.	in.	in.	in.	in.	in.	in.	in.	in.	in.	in.
⅛	⅛	0·206	0·113	0·175	0·113	0·313	0·250	0·375	0·455	0·485
¼	¼	0·319	0·226	0·288	0·223	0·375	0·313	0·438	0·599	0·629
⅜	⅜	0·425	0·355	0·394	0·355	0·438	0·375	0·500	0·757	0·787
½	½	0·569	0·491	0·538	0·491	0·438	0·375	0·625	0·943	0·973
¾	¾	0·785	0·691	0·754	0·691	0·500	0·438	0·750	1·190	1·220
1	1	1·000	0·917	0·934	0·917	0·563	0·500	0·875	1·463	1·493
1¼	1¼	1·274	1·212	1·243	1·212	0·625	0·563	1·000	1·820	1·850
1½	1½	1·505	1·443	1·474	1·443	0·688	0·625	1·000	2·073	2·103
2	2	2·000	1·845	1·877	1·845	0·750	0·688	1·125	2·556	2·586
2½	2½	2·521	2·458	2·490	2·458	0·813	0·750	1·250	3·221	3·251

NOTE. Thread undercuts may be provided when required. Longer threads are permitted where backnuts are used.

Full document details: BS 864:1953
AVA Documents
Document Sharing Hub