BS EN 10210-2:2019

BSI Standards Publication

Hot finished steel structural hollow sections

Part 2: Tolerances, dimensions and sectional properties

Documents
Document Sharing Hub

Full document details: BS EN 10210-2:2019

National foreword

This British Standard is the UK implementation of EN 10210-2:2019. It supersedes BS EN 10210-2:2006, which is withdrawn.

The UK participation in its preparation was entrusted to Technical Committee ISE/103, Structural Steels Other Than Reinforcements.

A list of organizations represented on this committee can be obtained on request to its secretary.

The UK committee draws users' attention to the fact that EN 10210-2:2006 is included in the normative references of BS EN 10210-1:2006. Furthermore, at the time of publication of this standard, EN 10210-1:2006 is cited in the Official Journal of the European Union (OJEU) under EU directive 89/106/EEC (CPD) Construction products (CPD/CPR).

For CE marking purposes under the CPD/CPR, the UK committee advises users that when a standard is included in the normative references of a standard cited in the OJEU, it continues to be used for CE marking until the citation in the OJEU is revised. In the case of this standard, therefore, users should continue to refer to EN 10210-2:2006 for CE marking purposes under the CPD/CPR until the citation of EN 10210-1:2006 in the OJEU is revised.

For further information, see www.ec.europa.eu/growth/single-market/european-standards/harmonised-standards/construction-products_en.

This publication does not purport to include all the necessary provisions of a contract. Users are responsible for its correct application.

© The British Standards Institution 2019
Published by BSI Standards Limited 2019

ISBN 978 0 580 92191 9

ICS 77.140.75

Compliance with a British Standard cannot confer immunity from legal obligations.

This British Standard was published under the authority of the Standards Policy and Strategy Committee on 31 May 2019.

Amendments/corrigenda issued since publication

Date	Text affected

Documents
Document Sharing Hub

Full document details: BS EN 10210-2:2019

EUROPEAN STANDARD

NORME EUROPÉENNE

EUROPÄISCHE NORM

EN 10210-2

May 2019

ICS 77.140.75

Supersedes EN 10210-2:2006

English Version

Hot finished steel structural hollow sections - Part 2: Tolerances, dimensions and sectional properties

Profils creux de construction finis à chaud en aciers - Partie 2 : Tolérances, dimensions et caractéristiques de section

Warmgefertigte Hohlprofile für den Stahlbau - Teil 2: Grenzabmaße, Maße und statische Werte

This European Standard was approved by CEN on 20 March 2019.

CEN members are bound to comply with the CEN/CENELEC Internal Regulations which stipulate the conditions for giving this European Standard the status of a national standard without any alteration. Up-to-date lists and bibliographical references concerning such national standards may be obtained on application to the CEN-CENELEC Management Centre or to any CEN member.

This European Standard exists in three official versions (English, French, German). A version in any other language made by translation under the responsibility of a CEN member into its own language and notified to the CEN-CENELEC Management Centre has the same status as the official versions.

CEN members are the national standards bodies of Austria, Belgium, Bulgaria, Croatia, Cyprus, Czech Republic, Denmark, Estonia, Finland, Former Yugoslav Republic of Macedonia, France, Germany, Greece, Hungary, Iceland, Ireland, Italy, Latvia, Lithuania, Luxembourg, Malta, Netherlands, Norway, Poland, Portugal, Romania, Serbia, Slovakia, Slovenia, Spain, Sweden, Switzerland, Turkey and United Kingdom.

EUROPEAN COMMITTEE FOR STANDARDIZATION
COMITÉ EUROPÉEN DE NORMALISATION
EUROPÄISCHES KOMITEE FÜR NORMUNG

CEN-CENELEC Management Centre: Rue de la Science 23, B-1040 Brussels

© 2019 CEN All rights of exploitation in any form and by any means reserved worldwide for CEN national Members.

Ref. No. EN 10210-2:2019 E

Documents
Document Sharing Hub

Full document details: BS EN 10210-2:2019

Contents

Page

European foreword ... 3
1 Scope ... 4
2 Normative references ... 4
3 Terms and definitions ... 4
4 Symbols ... 4
5 Information to be obtained by the manufacturer ... 6
6 Tolerances ... 6
7 Measurement of size and shape ... 8
8 Dimensions and sectional properties ... 13
Annex A (normative) **Formulae for the calculation of sectional properties** ... 14
A.1 General ... 14
A.2 Circular hollow sections ... 14
A.3 Rectangular, including square, hollow sections ... 15
A.4 Elliptical hollow sections ... 17
Annex B (normative) **Sectional properties for a limited range of standard sizes** ... 19

Documents
Document Sharing Hub
Full document details: BS EN 10210-2:2019

European foreword

This document (EN 10210-2:2019) has been prepared by Technical Committee CEN/TC 459 "ECISS - European Committee for Iron and Steel Standardization"[1], the secretariat of which is held by AFNOR.

This European Standard shall be given the status of a national standard, either by publication of an identical text or by endorsement, at the latest by November 2019, and conflicting national standards shall be withdrawn at the latest by November 2019.

Attention is drawn to the possibility that some of the elements of this document may be the subject of patent rights. CEN shall not be held responsible for identifying any or all such patent rights.

This document supersedes EN 10210-2:2006.

The main changes with respect to the previous edtion are listed below:

a) paragraph 5.2 two options were added;

b) in Table 2 the mass tolerances were changed;

c) Figure 2 was updated;

d) for Tables B.1, B.2 and B.3 larger sizes and wall thicknesses were added;

e) standard was editorially revised.

This standard consists of the following parts:

— EN 10368, *Steel structural hollow sections — General (Characteristics, evaluation of conformity and marking)* (in preparation)

— EN 10210-1, *Hot finished steel structural hollow sections — Part 1: Technical delivery conditions*

— EN 10210-2, *Hot finished steel structural hollow sections — Part 2: Tolerances, dimensions and sectional properties*

— EN 10210-3, *Hot finished steel structural hollow sections — Part 3: Technical delivery conditions for mechanical engineering purposes* (in preparation)

It forms part of a series of standards on hollow sections together with EN 10219-1 to EN 10219-3.

According to the CEN-CENELEC Internal Regulations, the national standards organisations of the following countries are bound to implement this European Standard: Austria, Belgium, Bulgaria, Croatia, Cyprus, Czech Republic, Denmark, Estonia, Finland, Former Yugoslav Republic of Macedonia, France, Germany, Greece, Hungary, Iceland, Ireland, Italy, Latvia, Lithuania, Luxembourg, Malta, Netherlands, Norway, Poland, Portugal, Romania, Serbia, Slovakia, Slovenia, Spain, Sweden, Switzerland, Turkey and the United Kingdom.

[1] Through its subcommittee SC 3 "Structural steels other than reinforcements" (secretariat: DIN)

AVA Documents
Document Sharing Hub

Full document details: BS EN 10210-2:2019

1 Scope

This document specifies tolerances for hot finished circular, square, rectangular and elliptical structural hollow sections, manufactured in wall thicknesses up to 120 mm, in the following size ranges:

— Circular: Outside diameters up to 2 500 mm;

— Square: Outside dimensions up to 800 mm × 800 mm;

— Rectangular: Outside dimensions up to 750 mm × 500 mm;

— Elliptical: Outside dimensions up to 500 mm × 250 mm.

The formulae for calculating sectional properties of sections manufactured to the dimensional tolerances of this standard, to be used for the purposes of structural design, are given in Annex A.

Dimensions and sectional properties for a limited range covering the more common sizes are given in Annex B.

NOTE The designation of the sections' major axis (yy) and minor axis (zz) aligns with the axis designation used for structural design in the structural Eurocodes.

2 Normative references

The following documents are referred to in the text in such a way that some or all of their content constitutes requirements of this document. For dated references, only the edition cited applies. For undated references, the latest edition of the referenced document (including any amendments) applies.

EN 10210-1, *Hot finished structural hollow sections of non-alloy and fine grain steels — Part 1: Technical delivery conditions*

3 Terms and definitions

For the purposes of this document, the terms and definitions given in EN 10210-1 apply.

ISO and IEC maintain terminological databases for use in standardization at the following addresses:

— IEC Electropedia: available at http://www.electropedia.org/

— ISO Online browsing platform: available at http://www.iso.org/obp

4 Symbols

For the purposes of this document, the symbols defined in Table 1 apply.

Table 1 — Symbols and definitions

Symbol	Unit	Definition
A	cm²	Cross-sectional area
A_m	mm²	Area of the surface delimited by the perimeter at mid-thickness
A_s	m²/m	Superficial area per metre length
B	mm	Specified side dimension of a square hollow section. Specified dimension of the shorter side of a rectangular

Documents
Document Sharing Hub
Full document details: BS EN 10210-2:2019

Symbol	Unit	Definition
		hollow section. Specified outside dimension of an elliptical section on its minor axis
C_1/C_2	mm	Length of corner region of a square or rectangular hollow section
C_t	cm^3	Torsional modulus constant
D	mm	Specified outside diameter of a circular hollow section
D_{max}/D_{min}	mm	Maximum and minimum outside diameter of a circular hollow section measured in the same plane
e	mm	Deviation from straightness
H	mm	Specified dimension of the longer side of a rectangular hollow section. Specified outside dimension of an elliptical section on its major axis
I	cm^4	Second moment of area
I_t	cm^4	Torsional inertia constant (polar moment of inertia in the case of circular hollow sections only)
i	cm	Radius of gyration
L	mm	Length
M	kg/m	Mass per unit length
O	%	Out-of-roundness
P	mm	External perimeter of an elliptical hollow section
R	mm	External corner radius of a square or rectangular hollow section
T	mm	Specified thickness
U	mm	Perimeter of an elliptical hollow section at mid-thickness
V	mm	Total measured twist
V_1	mm	Twist measured at one end of a section
W_{el}	cm^3	Elastic section modulus
W_{pl}	cm^3	Plastic section modulus
x_1	mm	Concavity of a side of a square or rectangular hollow section
x_2	mm	Convexity of a side of a square or rectangular hollow section
yy	—	Axis of cross-section, major axis of a rectangular hollow section
zz	—	Axis of cross-section, minor axis of a rectangular hollow section
θ	°	Angle between adjacent sides of a square or rectangular hollow section

AVA Documents
Document Sharing Hub

Full document details: BS EN 10210-2:2019

5 Information to be obtained by the manufacturer

5.1 Mandatory information

The following mandatory information from this part of EN 10210 shall be obtained by the manufacturer at the time of enquiry and order:

a) the dimensions (see Clause 8);

b) the type of length, length range or length (see Table 3).

NOTE This Information is included in the list of information to be obtained by the manufacturer contained in EN 10210-1.

5.2 Options

Options are specified in this part of EN 10210. In the event that the purchaser does not indicate a wish to implement one of these options at the time of enquiry and order, the manufacturer shall supply in accordance with the basic specification.

Option 2.1 The tolerance on approximate length shall be $^{+150}_{0}$ mm (see Table 3).

Option 2.2 Tolerance of external corner radius of 2T maximum at each corner.

Option 2.3 Out-of-roundness tolerances for diameter to thickness ratio exceeding 100 (see Table 2, footnote d).

6 Tolerances

6.1 Tolerances shall not exceed the values given in Table 2 for shape, straightness and mass, Table 3 for manufacturer's delivered length and Table 4 for the height of the internal and external weld bead of submerged arc welded hollow sections.

6.2 The internal corners of square and rectangular hollow sections shall be rounded, except in the case of EW sections for a corner containing the weld, should the weld be located in the corner region.

NOTE The internal corner profile is not specified.

Documents
Document Sharing Hub
Full document details: BS EN 10210-2:2019

Table 2 — Tolerances on shape, straightness and mass

Characteristic	Circular hollow sections	Square and rectangular hollow sections	Elliptical hollow sections
Outside dimensions (D, B, H)	±1 % with a minimum of ± 0,5 mm and a maximum of ± 10 mm	±1 [a] % with a minimum of ± 0,5 mm	
Thickness (T)	- 10 % [b] [c]		
Out-of-roundness (O)	2 % for hollow sections having a diameter to thickness ratio not exceeding 100 [d]	—	
Concavity/Convexity (x_1, x_2) [e]	—	1 %	—
Squareness of side (θ)	—	90° ± 1°	—
External corner profile (C_1, C_2 or R) [f]	—	3T maximum at each corner	—
Twist (V)	—	2 mm [a] plus 0,5 mm/m length	
Straightness (e)	0,2 [a] % of total length and 3 mm over any 1 m length		
Mass (M)	- 6 %/+ 8 % on individual delivered lengths		

[a] For elliptical hollow sections of sizes H < 250 mm, the permitted tolerance is twice the value given in this table.

[b] The positive deviation is limited by the tolerance on mass.

[c] For seamless sections thicknesses of less than 10 % but not less than 12,5 % of the nominal thickness may occur in smooth transition areas over not more than 25 % of the circumference.

[d] When the diameter to thickness ratio exceeds 100, application of tolerance on out-of-roundness is not required, unless specifically agreed (see 5.2).

[e] The tolerance on convexity and concavity is independent of the tolerance on outside dimensions.

[f] The sides need not be tangential to the corner arcs.

Documents
Document Sharing Hub
Full document details: BS EN 10210-2:2019

Table 3 — Tolerances on manufacturer's delivered length

Dimensions in millimetres

Type of length [a]	Range of length or length *L*	Tolerance
Random length	4 000 ≤ *L* ≤ 16 000 with a range of 2 000 per order item	10 % of sections supplied may be below the minimum for the ordered range but not shorter than 75 % of the minimum range length
Approximate length	4 000 ≤ *L* ≤ 16 000	±500 mm [b]
Exact length	2 000 ≤ *L* ≤ 6 000 6 000 < *L* [c]	$^{+10}_{0}$ mm $^{+15}_{0}$ mm

[a] The manufacturer shall establish at the time of enquiry and order the type of length required and the length range or length.

[b] Option 3.1 the tolerance on approximate length is $^{+150}_{0}$ mm.

[c] Common lengths available are 6 m and 12 m.

Table 4 — Tolerance on height of internal and external weld seam for submerged arc welded hollow sections

Dimensions in millimetres

Thickness, *T*	Maximum weld bead height
≤ 14,2	3,5
> 14,2	4,8

7 Measurement of size and shape

7.1 General

All external dimensions, including out-of-roundness, shall be measured at a distance from the end of the hollow section of not less than *D* for circular sections, *B* for square sections or *H* for rectangular and elliptical sections, with a minimum of 100 mm.

7.2 Outside dimensions

For circular hollow sections the diameter (*D*) and for elliptical hollow sections the outside dimensions (*B* and *H*) shall be measured either directly, e.g. using a calliper gauge, or for circular tubes by circumference tape at the discretion of the manufacturer.

The limiting cross-sectional positions for measuring *B* and *H* for square and rectangular hollow sections are shown in Figure 1.

7.3 Thickness

The thickness (*T*) of welded hollow sections shall be measured at a position not less than 2*T* from the weld.

The limiting cross-sectional positions for measuring the thickness of square and rectangular hollow sections are shown in Figure 1.

Documents
Document Sharing Hub
Full document details: BS EN 10210-2:2019

NOTE Thickness is normally measured within a distance of half the outside diameter or half the dimension of the longer side from the end of the section.

Dimensions in millimetres

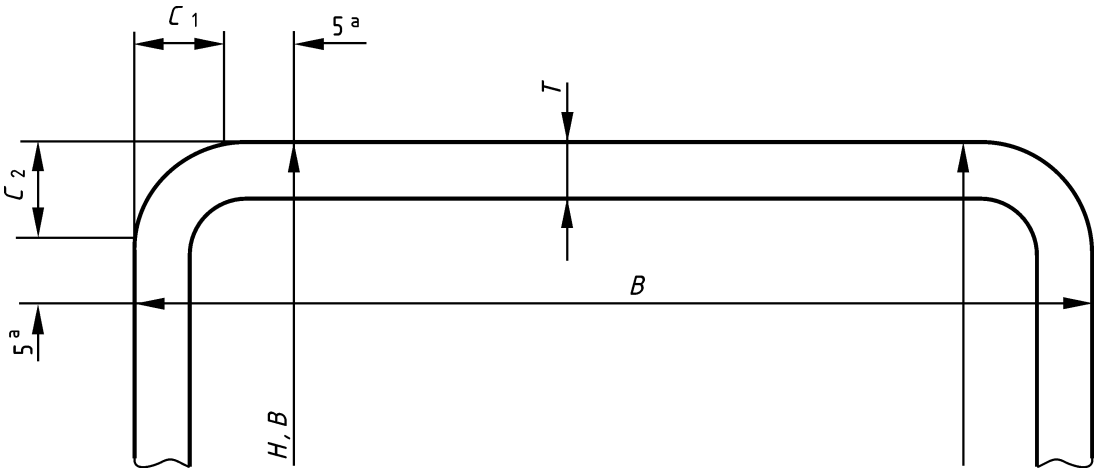

Key

[a] This dimension is a maximum when measuring *B* or *H* and a minimum when measuring *T*

Figure 1 — Limiting cross-sectional positions for measuring the dimensions *B*, *H* and *T* for square or rectangular hollow sections

7.4 Out-of-roundness

The out-of-roundness (O) of a circular hollow section shall be calculated from the following formula:

$$O(\%) = \frac{D_{\max} - D_{\min}}{D} \times 100$$

7.5 Concavity and convexity

The concavity (x_1) or the convexity (x_2) of the sides of a square or rectangular hollow section shall be measured as shown in Figure 2.

The percentage concavity or convexity shall be calculated as follows:

$$\frac{x_1}{B} \times 100\ \%; \frac{x_2}{B} \times 100\ \%; \frac{x_1}{H} \times 100\ \%; \frac{x_2}{H} \times 100\ \%$$

where B and H are the dimensions of the sides containing the concavity x_1 or the convexity x_2.

Documents
Document Sharing Hub
Full document details: BS EN 10210-2:2019

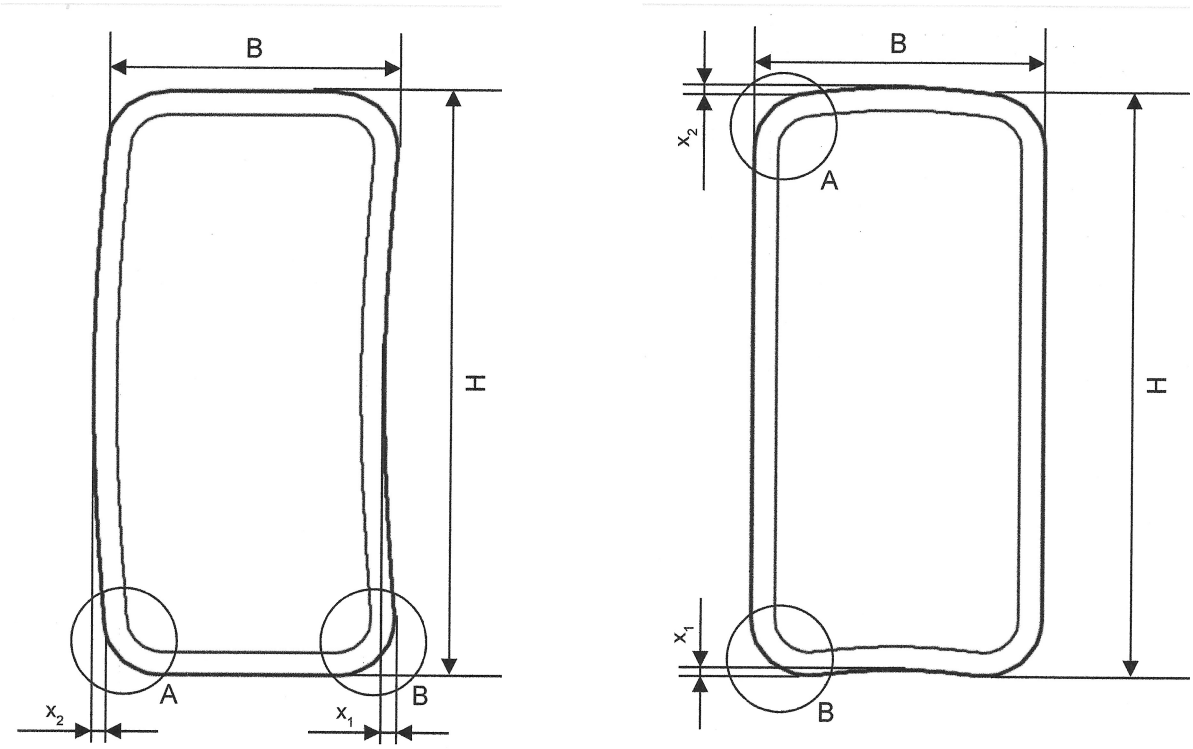

Figure 2 — Measurement of concavity/convexity of square or rectangular hollow sections

7.6 Squareness of sides

The deviation from squareness of the sides of a square or rectangular hollow section shall be measured as the difference between 90° and θ as shown in Figure 3.

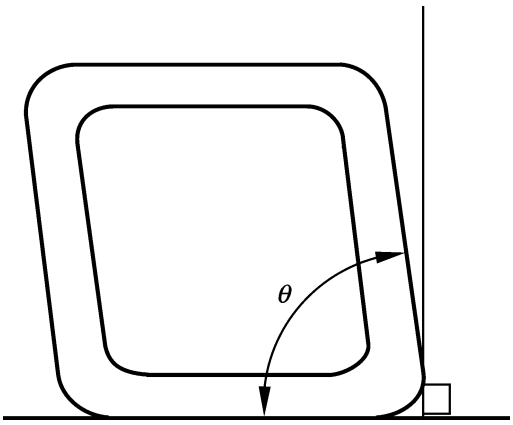

Figure 3 — Squareness of sides of square or rectangular hollow sections

7.7 External corner profile

7.7.1 The external corner profile of a square or rectangular hollow section shall be measured according to 7.7.2 or 7.7.3 at the discretion of the manufacturer.

7.7.2 The corner arc shall be measured with a radius gauge.

Documents
Document Sharing Hub
Full document details: BS EN 10210-2:2019

7.7.3 The distance between the intersection of the flat side and the corner arc and the intersection of the projections of the flat sides to the corner (C_1 and C_2 in Figure 4) shall be measured.

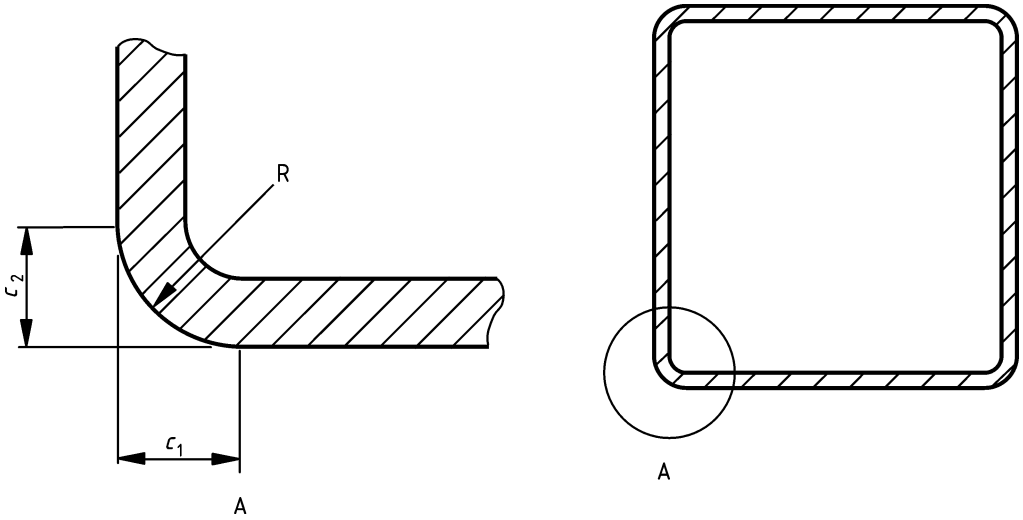

Figure 4 — Outside corner profile of square or rectangular hollow sections

7.8 Twist

7.8.1 The twist (V) in a square or rectangular hollow section shall be determined in accordance with 7.8.2 or 7.8.3 at the discretion of the manufacturer. The twist (V) in an elliptical hollow section shall be determined in accordance with 7.8.4.

7.8.2 The hollow section shall be placed on a horizontal surface with one side at one end pressed flat against the surface. At the opposite end of the hollow section, the difference in height of the two lower corners from the horizontal surface (see Figure 5) shall be determined.

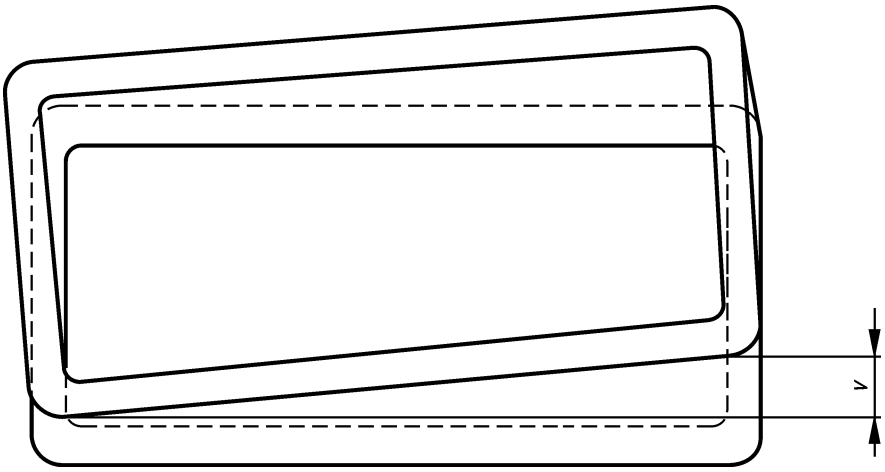

Figure 5 — Twist of square or rectangular hollow sections

7.8.3 The twist of square and rectangular hollow sections shall be measured with a spirit level and micrometer gauge (screw). The reference length of the spirit level shall be the distance between the intersection of the flat sides and the corner arcs (see Figure 6). The twist V is the difference between the values V_1 (see Figure 6) measured at each end of the hollow section.

AVA Documents
Document Sharing Hub

Full document details: BS EN 10210-2:2019

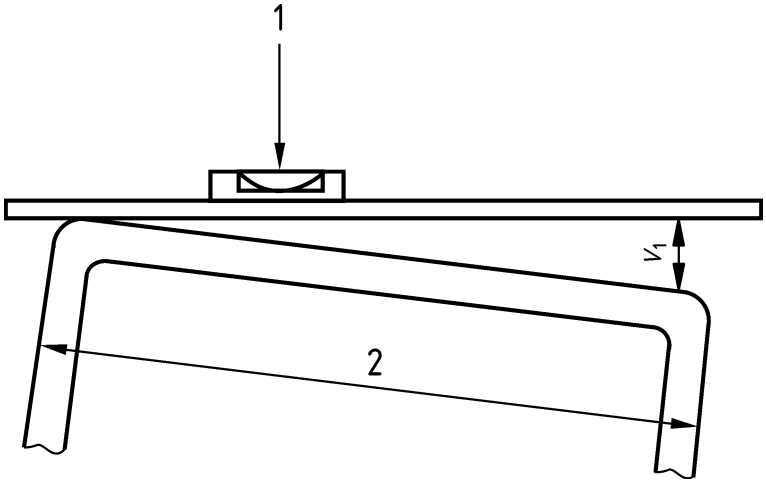

Key

1 spirit level

2 *H* for rectangular sections, *B* for square sections

Figure 6 — Measurement of twist on square or rectangular hollow sections

7.8.4 The twist of elliptical hollow sections shall be measured with a spirit level and micrometer gauge (screw). The reference length of the spirit level shall be the dimension of the sections major axis (*H*). The twist *V* is the difference between the values V_1 (see Figure 7) measured at each end of the hollow section.

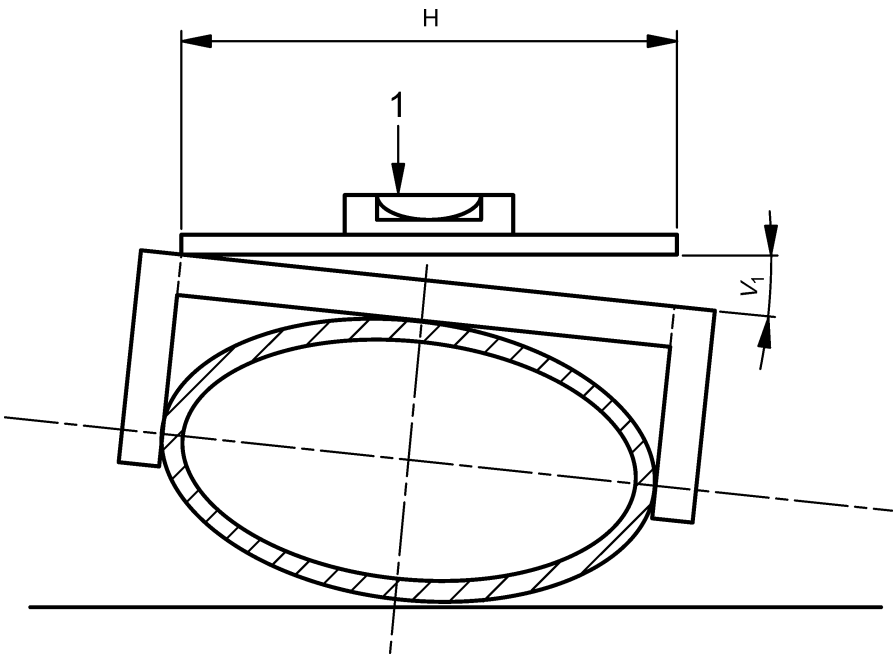

Key

1 spirit level

Figure 7 — Measurement of twist of elliptical hollow sections

Documents
Document Sharing Hub
Full document details: BS EN 10210-2:2019