BS EN 1097-2:2020

BSI Standards Publication

Tests for mechanical and physical properties of aggregates

Part 2: Methods for the determination of resistance to fragmentation

Documents
Document Sharing Hub

Full document details: BS EN 1097-2:2020

National foreword

This British Standard is the UK implementation of EN 1097-2:2020. It supersedes BS EN 1097-2:2010, which is withdrawn.

The UK participation in its preparation was entrusted to Technical Committee B/502/6, Test methods.

A list of organizations represented on this committee can be obtained on request to its secretary.

This publication does not purport to include all the necessary provisions of a contract. Users are responsible for its correct application.

© The British Standards Institution 2020
Published by BSI Standards Limited 2020

ISBN 978 0 580 51892 8

ICS 91.100.15

Compliance with a British Standard cannot confer immunity from legal obligations.

This British Standard was published under the authority of the Standards Policy and Strategy Committee on 30 April 2020.

Amendments/corrigenda issued since publication

Date	Text affected

Documents
Document Sharing Hub

Full document details: BS EN 1097-2:2020

EUROPEAN STANDARD

NORME EUROPÉENNE

EUROPÄISCHE NORM

EN 1097-2

April 2020

ICS 91.100.15

Supersedes EN 1097-2:2010

English Version

Tests for mechanical and physical properties of aggregates - Part 2: Methods for the determination of resistance to fragmentation

Essais pour déterminer les caractéristiques mécaniques et physiques de granulats - Partie 2 : Méthodes pour la détermination de la résistance à la fragmentation

Prüfverfahren für mechanische und physikalische Eigenschaften von Gesteinskörnungen - Teil 2: Verfahren zur Bestimmung des Widerstandes gegen Zertrümmerung

This European Standard was approved by CEN on 24 February 2020.

CEN members are bound to comply with the CEN/CENELEC Internal Regulations which stipulate the conditions for giving this European Standard the status of a national standard without any alteration. Up-to-date lists and bibliographical references concerning such national standards may be obtained on application to the CEN-CENELEC Management Centre or to any CEN member.

This European Standard exists in three official versions (English, French, German). A version in any other language made by translation under the responsibility of a CEN member into its own language and notified to the CEN-CENELEC Management Centre has the same status as the official versions.

CEN members are the national standards bodies of Austria, Belgium, Bulgaria, Croatia, Cyprus, Czech Republic, Denmark, Estonia, Finland, France, Germany, Greece, Hungary, Iceland, Ireland, Italy, Latvia, Lithuania, Luxembourg, Malta, Netherlands, Norway, Poland, Portugal, Republic of North Macedonia, Romania, Serbia, Slovakia, Slovenia, Spain, Sweden, Switzerland, Turkey and United Kingdom.

EUROPEAN COMMITTEE FOR STANDARDIZATION
COMITÉ EUROPÉEN DE NORMALISATION
EUROPÄISCHES KOMITEE FÜR NORMUNG

CEN-CENELEC Management Centre: Rue de la Science 23, B-1040 Brussels

© 2020 CEN All rights of exploitation in any form and by any means reserved worldwide for CEN national Members.

Ref. No. EN 1097-2:2020 E

Documents
Document Sharing Hub

Full document details: BS EN 1097-2:2020

Contents

Page

European foreword 4

1 Scope 6

2 Normative references 6

3 Terms and definitions 7

4 Apparatus 8
4.2 Additional apparatus required for determination of resistance to fragmentation by the Los Angeles test method 8
4.3 Additional apparatus required for determination of resistance to fragmentation by the impact test method 10

5 Determination of resistance to fragmentation by the Los Angeles test method 10
5.1 Principle 10
5.2 Preparation of test portion 10
5.3 Test procedure 11
5.4 Calculation and expression of results 11
5.5 Test report 12

6 Determination of resistance to fragmentation by the impact test method 12
6.1 Principle 12
6.2 Preparation of test specimens 12
6.3 Test procedure 13
6.4 Calculation and expression of results 13
6.5 Test report 14

Annex A (normative) Determination of resistance to fragmentation of aggregates for railway ballast 15

A.1 Apparatus 15

A.2 Determination of resistance to fragmentation by the Los Angeles test method 17

A.3 Determination of resistance to fragmentation by the impact test method 19

Annex B (informative) Alternative narrow range classifications 22

B.1 Los Angeles test 22

B.2 Impact test 22

Annex C (informative) The impact tester: Construction, operation and safety requirements 24

C.1 General 24

C.2 Construction 24

C.3 Lifting device 25

C.4 Sample holder 25

C.5 Anvil 26

Documents
Document Sharing Hub

Full document details: BS EN 1097-2:2020

C.6 Base plate and dampers ... 27
C.7 Safety requirements and testing ... 27
C.8 Checking of impact tester ... 27
Annex D (informative) Checking of the impact tester ... 36
D.1 Scope and field of application ... 36
D.2 Checklist ... 36
D.3 Apparatus and test agents ... 36
D.4 Procedure ... 36
Annex E (informative) Precision ... 38
E.1 General ... 38
E.2 Los Angeles test ... 38
E.3 Impact test ... 38
Annex F (informative) Worked example of calculation of impact value *SZ* ... 40
Annex G (informative) Alternative narrow range classification for the Los Angeles test of 16/32 mm recycled aggregates ... 41
Annex H (informative) Additional sieve for evaluation of the Los Angeles test for railway ballast ... 42
Bibliography ... 43

Documents
Document Sharing Hub
Full document details: BS EN 1097-2:2020

European foreword

This document (EN 1097-2:2020) has been prepared by Technical Committee CEN/TC 154 "Aggregates", the secretariat of which is held by BSI.

This European Standard shall be given the status of a national standard, either by publication of an identical text or by endorsement, at the latest by October 2020, and conflicting national standards shall be withdrawn at the latest by October 2020.

Attention is drawn to the possibility that some of the elements of this document may be the subject of patent rights. CEN shall not be held responsible for identifying any or all such patent rights.

This document supersedes EN 1097-2:2010.

The main technical changes compared to EN 1097-2:2010 are the following:

— All annexes are presented in the Scope.

— The definition of LA_{RB} has been added in Clause 3.

— Reference to the test sieves in Annex B has been added in Table 1.

— Guard sieves are introduced in 4.1 General apparatus.

— Figure 1 describing a typical Los Angeles testing machine has been modified.

— Notes with normative text have been transformed into main text (Note in 4.2.2.1, Note 3 in 5.2 and Note in 6.2.2).

— Explanations about ball load have been added as notes in 4.2.2.2.

— The test procedure in 5.3 has been clarified.

— The texts about masses in 6.2.4 and 6.3.4 have been clarified.

— Annex A is completed to contain full text, not only the clauses expressing additions or modifications to main text clauses.

— The text about ball load in A.1.2.2 has been completed.

— The test procedure for aggregates for railway ballast has been completed (A.2.3).

— Formula (A.1) has been changed.

— The test report content has been adopted to the current rules (5.5, 6.5, A.2.5 and A.3.5).

— The principle and the test procedure for impact test of aggregates for railway ballast have been completed (A.3.1 and A.3.3).

— Annex B has been modified to include both LA test and impact test and is completed with alternative narrow range classifications for the impact test.

Documents
Document Sharing Hub
Full document details: BS EN 1097-2:2020

— The texts about determination of impact effect have been removed (D.3.2, D.4.7 and the last point of the checklist in D.2).

— A new Annex H with an additional sieve for evaluation of the Los Angeles test for railway ballast is added.

— The Bibliography is supplemented.

— All references (except for the normative) are dated.

This European standard forms part of a series of tests for mechanical and physical properties of aggregates. Test methods for other properties of aggregates are covered by the following European standards:

— EN 932, *Tests for general properties of aggregates*

— EN 933, *Tests for geometrical properties of aggregates*

— EN 1367, *Tests for thermal and weathering properties of aggregates*

— EN 1744, *Tests for chemical properties of aggregates*

— EN 13179, *Tests for filler aggregate used in bituminous mixtures*

EN 1097 consists of the following parts, under the general title *Tests for mechanical and physical properties of aggregates*:

— *Part 1: Determination of the resistance to wear (micro-Deval)*

— *Part 3: Determination of loose bulk density and voids*

— *Part 4: Determination of the voids of dry compacted filler*

— *Part 5: Determination of the water content by drying in a ventilated oven*

— *Part 6: Determination of particle density and water absorption*

— *Part 7: Determination of the particle density of filler — Pyknometer method*

— *Part 8: Determination of the polished stone value*

— *Part 9: Method for the determination of the resistance to wear by abrasion from studded tyres — Nordic test*

— *Part 10: Water suction height*

— *Part 11: Determination of compressibility and confined compressive strength of lightweight aggregates*

According to the CEN-CENELEC Internal Regulations, the national standards organisations of the following countries are bound to implement this European Standard: Austria, Belgium, Bulgaria, Croatia, Cyprus, Czech Republic, Denmark, Estonia, Finland, France, Germany, Greece, Hungary, Iceland, Ireland, Italy, Latvia, Lithuania, Luxembourg, Malta, Netherlands, Norway, Poland, Portugal, Republic of North Macedonia, Romania, Serbia, Slovakia, Slovenia, Spain, Sweden, Switzerland, Turkey and the United Kingdom

Documents
Document Sharing Hub
Full document details: BS EN 1097-2:2020

1 Scope

This document describes the reference method, the Los Angeles test, used for type testing and in case of dispute (and an alternative method, the impact test) for determining the resistance to fragmentation of coarse aggregates (main text) and aggregates for railway ballast (Annex A). For other purposes, in particular factory production control, other methods are possible provided that an appropriate working relationship with the reference method has been established.

This document applies to natural, manufactured or recycled aggregates used in building and civil engineering.

Annex A describes a method for the determination of resistance to fragmentation of aggregates for railway ballast.

Annex B gives alternative narrow range classifications for the Los Angeles test and the impact test.

Annex C contains construction, operation and safety requirements for the impact tester.

Annex D describes a method for checking of the impact tester.

Annex E gives precision data.

Annex F contains a worked example of calculation of impact value *SZ*.

Annex G gives an alternative narrow range classification for the Los Angeles test of 16/32 mm recycled aggregates.

Annex H proposes an additional sieve for the evaluation of the Los Angeles test for railway ballast.

Annex A is normative and Annexes B to H are informative.

2 Normative references

The following documents are referred to in the text in such a way that some or all of their content constitutes requirements of this document. For dated references, only the edition cited applies. For undated references, the latest edition of the referenced document (including any amendments) applies.

EN 932-2, *Tests for general properties of aggregates — Part 2: Methods for reducing laboratory samples*

EN 932-5, *Tests for general properties of aggregates — Part 5: Common equipment and calibration*

EN 933-1, *Tests for geometrical properties of aggregates — Part 1: Determination of particle size distribution — Sieving method*

EN 933-2, *Tests for geometrical properties of aggregates — Part 2: Determination of particle size distribution — Test sieves, nominal size of apertures*

EN 1097-6, *Tests for mechanical and physical properties of aggregates — Part 6: Determination of particle density and water absorption*

EN 10025-2:2004, *Hot rolled products of structural steels — Part 2: Technical delivery conditions for non-alloy structural steels*

Documents
Document Sharing Hub
Full document details: BS EN 1097-2:2020

3 Terms and definitions

For the purposes of this document, the following terms and definitions apply.

ISO and IEC maintain terminological databases for use in standardization at the following addresses:

— IEC Electropedia: available at http://www.electropedia.org/

— ISO Online browsing platform: available at https://www.iso.org/obp/ui

3.1
constant mass
mass determined after successive weighings at least 1 h apart not differing by more than 0,1 %

Note 1 to entry: In many cases, constant mass can be achieved after a test portion has been dried for a pre-determined period in a specified oven (see 4.1.4) at (110 ± 5) °C. Test laboratories can determine the time required to achieve constant mass for specific types and sizes of sample dependent upon the drying capacity of the oven used.

3.2
impact value
SZ
value which gives a measure of the resistance of aggregates to dynamic crushing; it is equal to one fifth of the sum of the mass percentages of the tested sample passing through five specified test sieves when tested in accordance with Clause 6

3.3
laboratory sample
sample intended for laboratory testing

3.4
Los Angeles coefficient
***LA, LA*$_{RB}$**
percentage of the mass of the test portion passing the 1,6 mm sieve after completion of the test

Note 1 to entry: The test portion fraction is 10/14 mm for *LA* in the main text and 31,5/50 mm for LA_{RB} in Annex A (Railway Ballast).

3.5
test portion
sample used as a whole in a single test

3.6
test specimen
sample used in a single determination when a test method requires more than one determination of a property

Documents
Document Sharing Hub
Full document details: BS EN 1097-2:2020

4 Apparatus

Unless otherwise stated, all apparatus shall conform to the general requirements of EN 932-5.

4.1 General apparatus

4.1.1 Test sieves, conforming to EN 933-2 with aperture sizes as specified in Table 1.

Table 1 — Test sieves

Test	Aperture size mm
Los Angeles	1,6; 10; 11,2 (or 12,5); 14
Impact test [a]	0,2; 0,63; 2; 5; 8; 10; 11,2; 12,5
For alternative narrow range classifications, other sieves can be used (see Annex B).	
[a] For the impact test, because of the tolerances in the sieve openings, the same 8 mm test sieve used for the preparation of the test portion should again be used for the evaluation of the test.	

4.1.2 Guard sieve, e.g. 2 mm, 4 mm or 8 mm.

4.1.3 Balance, capable of weighing the test portion to an accuracy of 0,1 % of the mass of the test portion.

4.1.4 Ventilated oven, controlled to maintain a temperature of (110 ± 5) °C.

4.1.5 Brush and bowls.

4.2 Additional apparatus required for determination of resistance to fragmentation by the Los Angeles test method

4.2.1 Equipment, for reducing the laboratory sample to a test portion, as described in EN 932-2.

4.2.2 Los Angeles test machine, comprising the following essential parts.

NOTE An example of a machine that has been found to be satisfactory is shown in Figure 1.

Documents
Document Sharing Hub
Full document details: BS EN 1097-2:2020

Dimensions in millimetres

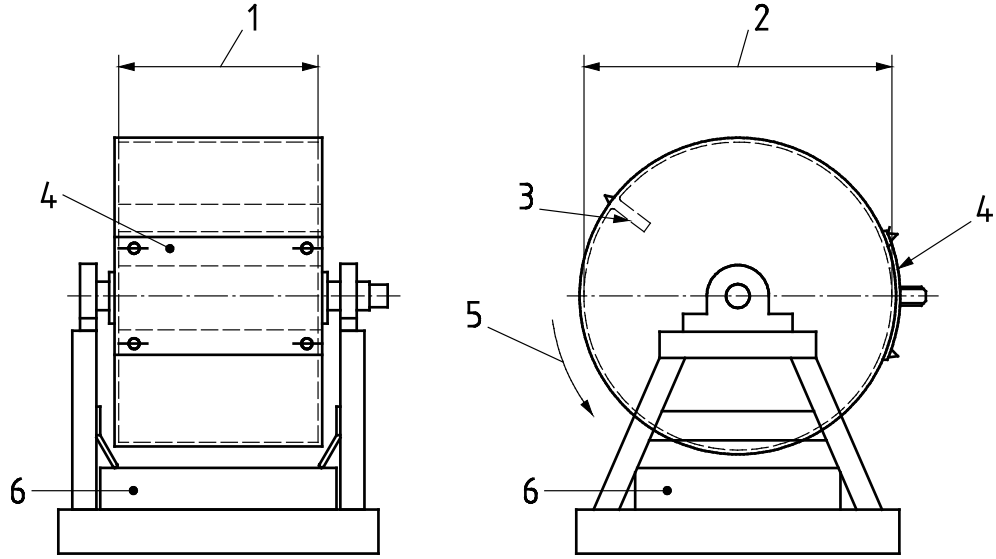

Key

1 internal length (508 ± 5)
2 internal diameter (711 ± 5)
3 shelf
4 cover and opening
5 rotation
6 tray

Figure 1 — Typical Los Angeles testing machine

4.2.2.1 **Hollow drum**, made of structural steel plate ($12^{+1,0}_{-0,5}$) mm thick conforming to grade S275 of EN 10025-2:2004 which has been selected to be formed without undue stress, and can be welded without significant distortion. The drum shall be closed at both ends. It shall have an internal diameter of (711 ± 5) mm and an internal length of (508 ± 5) mm. The drum shall be supported on two horizontal stub axles fixed to its two end walls but not penetrating inside the drum; the drum shall be mounted so that it rotates about a horizontal axis.

An opening (150 ± 3) mm wide shall be provided, preferably over the whole length of the drum, to facilitate insertion and removal of the sample after the test. During the test, the opening shall be sealed so that it is dustproof, by using a removable cover which enables the inside surface to remain cylindrical.

The cylindrical inner surface shall be interrupted by a projecting shelf, placed between 380 mm and 820 mm from the nearest edge of the opening. The distance shall be measured along the inside of the drum in the direction of rotation. The shelf shall have a rectangular cross section (length equal to that of the drum, width (90 ± 2) mm, thickness (25 ± 1) mm) and it shall be placed in a diametrical plane, along a generating line, and shall be rigidly fixed in place.

The shelf shall be replaced when its width at any point wears to less than 86 mm and its thickness at any point along the front edge wears to less than 23 mm.

The base of the machine shall be supported directly on a level concrete or stone block floor.

Documents
Document Sharing Hub
Full document details: BS EN 1097-2:2020

The removable cover should be made of the same steel as the drum. The projecting shelf should be made of the same steel or a harder grade.

4.2.2.2 **Ball load**, consisting of 11 spherical steel balls. Each ball shall weigh between 400 g and 445 g, and the total load shall weigh between 4 690 g and 4 860 g.

NOTE 1 The approximate diameter of balls is 47 mm.

NOTE 2 The nominal mass of the charge with new balls is 4 840 g. A positive tolerance of 20 g allows for manufacturing variation and a negative tolerance of 150 g allows for ball wear in use.

NOTE 3 A hardness of the steel balls between HRC 60 and HRC 66 is suitable.

4.2.2.3 **Motor**, imparting a rotational speed to the drum of between 31 r/min and 33 r/min.

4.2.2.4 **Tray**, for recovering the material and the ball load after testing.

4.2.2.5 **Revolution counter**, which will automatically stop the motor after the required number of revolutions.

4.3 Additional apparatus required for determination of resistance to fragmentation by the impact test method

4.3.1 **Impact tester**, see Annex C.

4.3.2 **Equipment for testing the accuracy** of the impact tester, see Annex D.

5 Determination of resistance to fragmentation by the Los Angeles test method

5.1 Principle

A sample of aggregate is rolled with steel balls in a rotating drum. After rolling is complete, the quantity of material retained on a 1,6 mm sieve is determined.

5.2 Preparation of test portion

A laboratory sample shall be obtained in accordance with EN 932-2. The mass of the laboratory sample shall have at least 15 kg of particles in the 10 mm to 14 mm size range.

The test shall be carried out on aggregate passing the 14 mm test sieve and retained on the 10 mm test sieve. In addition, the grading of the test portion shall comply with at least one of the following requirements:

a) between 60 % and 70 % passing a 12,5 mm test sieve;

b) between 30 % and 40 % passing a 11,2 mm test sieve.

NOTE 1 The additional grading requirements allow the test portion to be created from aggregate sizes other than 10/14 mm (see Annex B).

NOTE 2 For recycled aggregates, a test procedure for the 16/32 mm size fraction is described in Annex G. Table G.1 will be completed in the future with additional sizes if needed.

Sieve the laboratory sample using the 10 mm, 11,2 mm (or 12,5 mm) and 14 mm test sieves to give separate fractions in the ranges 10 mm to 11,2 mm (or 12,5 mm) and 11,2 mm (or 12,5 mm) to 14 mm.

Documents
Document Sharing Hub
Full document details: BS EN 1097-2:2020

Wash each fraction on the sieve defining the lower limit of the size fraction. Dry the fractions to constant mass at (110 ± 5) °C.

For temperature-sensitive recycled aggregates, a drying temperature of (40 ± 5) °C should be used.

Allow the fractions to cool to ambient temperature. Mix the two fractions to provide a modified 10 mm to 14 mm laboratory sample which complies with the appropriate additional grading requirement given above.

Reduce the modified laboratory sample prepared from the mixed fractions to test portion size in accordance with EN 932-2. The test portion shall have a mass of (5 000 ± 5) g.

It is also acceptable to directly reduce the mass of each individual size fraction to its required mass in the test portion.

5.3 Test procedure

Check that the drum is clean before loading the sample. Carefully place the balls in the machine, then the test portion. Replace the cover and rotate the machine for 500 revolutions at a constant speed between 31 r/min and 33 r/min.

Discharge the content of the drum into a tray placed under the apparatus, taking care that the opening is just above the tray in order to avoid losing any material. Clean out the drum, collecting all particles, paying particular attention around the projecting shelf. Carefully remove the ball load from the tray, taking care not to lose any aggregate particles.

Sieve the retained material on the tray on the 1,6 mm test sieve, protected by appropriate guard sieves, according to EN 933-1.

Wash the material retained on the guard sieves and the 1,6 mm test sieve in a stream of clean water. Place the aggregate particles retained on the guard sieves and the 1,6 mm test sieve into a bowl.

Dry the portion placed in the bowl at a temperature of (110 ± 5) °C (or (40 ± 5) °C, see 5.2) until a constant mass is achieved. Allow the fractions to cool to ambient temperature. Record the mass, m, to the nearest gram.

5.4 Calculation and expression of results

Calculate the Los Angeles coefficient *LA* from the following formula:

$$LA = \frac{5\,000 - m}{50} \tag{1}$$

where

m is the mass retained on the 1,6 mm sieve, in grams.

Report the result to the nearest whole number.

NOTE A statement on the precision of the Los Angeles test is given in Annex E.

Documents
Document Sharing Hub
Full document details: BS EN 1097-2:2020

5.5 Test report

5.5.1 Required data

The test report shall include the following information:

a) reference to this European standard (including its year of publication);

b) identification of the laboratory sample, including the origin of the sample;

c) identification of the laboratory;

d) date of test;

e) Los Angeles coefficient, LA, to the nearest whole number, calculated according to 5.4;

f) deviations from the reference method – if any;

g) any unusual features observed.

5.5.2 Optional data

The test report may include the following information:

a) reference to the chosen sampling procedure;

b) reference to the chosen sample reduction procedure;

c) mass of the test portion;

d) used size fractions to form the test portion 10/14 mm;

e) sampling report, if available;

f) sample reception date if different from sampling date;

g) other influencing parameters.

6 Determination of resistance to fragmentation by the impact test method

6.1 Principle

A test specimen is placed in a steel cylinder and subjected to ten impacts from a hammer of mass 50 kg, falling from a specified height. The amount of fragmentation caused by the ten impacts is measured by sieving the test specimen using five specified test sieves.

6.2 Preparation of test specimens

6.2.1 The laboratory sample shall contain at least 5 kg of the size fraction 8 mm to 10 mm and 2,5 kg of each of the size fractions 10 mm to 11,2 mm and 11,2 mm to 12,5 mm.

6.2.2 A quantity of the size fractions 8 mm to 10 mm, 10 mm to 11,2 mm and 11,2 mm to 12,5 mm sufficient for at least three test specimens (see 6.2.3 and 6.2.4) shall be prepared from the laboratory sample using the sieves 8 mm, 10 mm, 11,2 mm and 12,5 mm specified in 4.1.1.

Documents
Document Sharing Hub
Full document details: BS EN 1097-2:2020