BS EN 1113:2015

BSI Standards Publication

Sanitary tapware — Shower hoses for sanitary tapware for water supply systems of type 1 and type 2 — General technical specification

bsi.

...making excellence a habit.™

Document Sharing Hub

National foreword

This British Standard is the UK implementation of EN 1113:2015. It supersedes BS EN 1113:2008+A1:2011 which is withdrawn.

The UK participation in its preparation was entrusted to Technical Committee B/504, Water supply.

A list of organizations represented on this committee can be obtained on request to its secretary.

This publication does not purport to include all the necessary provisions of a contract. Users are responsible for its correct application.

© The British Standards Institution 2015.
Published by BSI Standards Limited 2015

ISBN 978 0 580 87328 7
ICS 23.040.70; 91.140.70

Compliance with a British Standard cannot confer immunity from legal obligations.

This British Standard was published under the authority of the Standards Policy and Strategy Committee on 30 April 2015.

Amendments/corrigenda issued since publication

Date	Text affected

Documents
Document Sharing Hub

Full document details: BS EN 1113:2015

EUROPEAN STANDARD

NORME EUROPÉENNE

EUROPÄISCHE NORM

EN 1113

April 2015

ICS 23.040.70; 91.140.70

Supersedes EN 1113:2008+A1:2011

English Version

Sanitary tapware - Shower hoses for sanitary tapware for water supply systems of type 1 and type 2 - General technical specification

Robinetterie sanitaire - Flexibles de douches pour robinetterie sanitaire pour les systèmes d`alimentation type 1 et type 2 - Spécifications techniques générales

Sanitärarmaturen - Brauseschläuche für Sanitärarmaturen für Wasserversorgungssysteme vom Typ 1 und Typ 2 - Allgemeine technische Spezifikation

This European Standard was approved by CEN on 12 March 2015.

CEN members are bound to comply with the CEN/CENELEC Internal Regulations which stipulate the conditions for giving this European Standard the status of a national standard without any alteration. Up-to-date lists and bibliographical references concerning such national standards may be obtained on application to the CEN-CENELEC Management Centre or to any CEN member.

This European Standard exists in three official versions (English, French, German). A version in any other language made by translation under the responsibility of a CEN member into its own language and notified to the CEN-CENELEC Management Centre has the same status as the official versions.

CEN members are the national standards bodies of Austria, Belgium, Bulgaria, Croatia, Cyprus, Czech Republic, Denmark, Estonia, Finland, Former Yugoslav Republic of Macedonia, France, Germany, Greece, Hungary, Iceland, Ireland, Italy, Latvia, Lithuania, Luxembourg, Malta, Netherlands, Norway, Poland, Portugal, Romania, Slovakia, Slovenia, Spain, Sweden, Switzerland, Turkey and United Kingdom.

EUROPEAN COMMITTEE FOR STANDARDIZATION
COMITÉ EUROPÉEN DE NORMALISATION
EUROPÄISCHES KOMITEE FÜR NORMUNG

CEN-CENELEC Management Centre: Avenue Marnix 17, B-1000 Brussels

© 2015 CEN All rights of exploitation in any form and by any means reserved worldwide for CEN national Members.

Ref. No. EN 1113:2015 E

Documents
Document Sharing Hub

Full document details: BS EN 1113:2015

Contents

Foreword 4

Introduction 5

1 Scope 6

2 Normative references 9

3 Terms and definitions 9

4 Designation 9

5 Marking 9

6 Materials 9
6.1 Chemical and hygienic requirements 9
6.2 Exposed surface condition and quality of coating 10

7 Dimensional characteristics 10
7.1 General 10
7.2 Connecting dimensions 10
7.3 Special cases 11

8 Hydraulic characteristics 11
8.1 General 11
8.2 Flow rate 12
8.2.1 Test method 12
8.2.2 Principle 12
8.2.3 Apparatus 12
8.2.4 Procedure 12
8.2.5 Requirements 12

9 Mechanical and leaktightness characteristics 14
9.1 General 14
9.2 Tensile strength 14
9.2.1 Test method 14
9.2.2 Principle 14
9.2.3 Apparatus 14
9.2.4 Procedure 15
9.2.5 Requirements 15
9.3 Resistance to flexing 15
9.3.1 Test Method 15
9.3.2 Principle 15
9.3.3 Apparatus 15
9.3.4 Procedure 17
9.3.5 Requirement 17
9.4 Pressure resistance at elevated temperature 17
9.4.1 Test method 17
9.4.2 Principle 17
9.4.3 Apparatus 18
9.4.4 Procedure 18
9.4.5 Requirements 19
9.5 Leaktightness after tensile strength and resistance to flexing tests 19
9.5.1 Test method 19
9.5.2 Principle 19

Documents
Document Sharing Hub

Full document details: BS EN 1113:2015

9.5.3 Apparatus **19**
9.5.4 Procedure **19**
9.5.5 Requirements **19**
9.6 Thermal shock test **19**
9.6.1 Test method **19**
9.6.2 Principle **19**
9.6.3 Apparatus **19**
9.6.4 Procedure **20**
9.6.5 Requirements **20**

10 Rotary connection **20**
10.1 General **20**
10.2 Test Method **21**
10.2.1 Principle **21**
10.2.2 Apparatus **21**
10.2.3 Procedure **21**
10.2.4 Requirement **22**

Bibliography **23**

Documents
Document Sharing Hub

Full document details: BS EN 1113:2015

Foreword

This document (EN 1113:2015) has been prepared by Technical Committee CEN/TC 164 “Water supply”, the secretariat of which is held by AFNOR.

This European Standard shall be given the status of a national standard, either by publication of an identical text or by endorsement, at the latest by October 2015, and conflicting national standards shall be withdrawn at the latest by October 2015.

Attention is drawn to the possibility that some of the elements of this document may be the subject of patent rights. CEN [and/or CENELEC] shall not be held responsible for identifying any or all such patent rights.

This document supersedes EN 1113:2008+A1:2011.

The main change to this standard is the introduction of 2 classes for hoses for supply systems of type 1. See Table 1 and Table 3.

According to the CEN-CENELEC Internal Regulations, the national standards organizations of the following countries are bound to implement this European Standard: Austria, Belgium, Bulgaria, Croatia, Cyprus, Czech Republic, Denmark, Estonia, Finland, Former Yugoslav Republic of Macedonia, France, Germany, Greece, Hungary, Iceland, Ireland, Italy, Latvia, Lithuania, Luxembourg, Malta, Netherlands, Norway, Poland, Portugal, Romania, Slovakia, Slovenia, Spain, Sweden, Switzerland, Turkey and the United Kingdom.

Documents
Document Sharing Hub
Full document details: BS EN 1113:2015

Introduction

In respect of potential adverse effects on the quality of water intended for human consumption caused by the product covered by this European Standard:

— This European Standard provides no information as to whether the product may be used without restriction in any of the Member States of the EU or EFTA.

— While awaiting the adoption of verifiable European criteria, existing national regulations concerning the use and/or the characteristics of this product remain in force.

Documents
Document Sharing Hub
Full document details: BS EN 1113:2015

1 Scope

This European Standard specifies:

— the dimensional, leaktightness, mechanical and hydraulic characteristics with which shower hoses should comply;

— the procedures for testing these characteristics.

This European Standard applies to shower hoses of any material used for ablutionary purposes and intended for equipping and supplementing sanitary tapware for baths and showers.

This European Standard applies to shower hoses connected downstream of the obturator of the tapware.

Hoses which are an integral part of sanitary tapware (sink and wash basin mixing valves) or hoses intended to connect sanitary tapware to the water supplies are not covered by this European Standard.

Details of pressures and temperatures are given in Table 1.

Table 1 — Conditions of use/Classifications

Water Supply system	Operating range of shower hoses		Flow rates
	Limits	Recommended	See Table 3
Type 1 see Figure 1	Dynamic Pressure (0,05 to 0,5) MPa [(0,5 to 5) bar]	Dynamic Pressure (0,1 to 0,3) MPa [(1,0 to 3,0) bar]	Class 1 0,42 l/s ≤ Q (25,2 l/min ≤ Q) at ($0{,}3^{+0{,}02}_{0}$) MPa [($3^{+0{,}2}_{0}$) bar]
			Class 2 0,20 l/s ≤ Q < 0,42 l/s (12 l/min ≤ Q < 25,2 l/min) at ($0{,}3^{+0{,}02}_{0}$) MPa [($3^{+0{,}2}_{0}$) bar]
Type 2 see Figure 2	Dynamic Pressure (0,01 to 0,2) MPa [(0,1 to 2) bar]	Dynamic Pressure (0,02 to 0,10) MPa [(0,2 to 1,0) bar]	Class E 0,06 l/s < Q < 0,18 l/s (3,6 l/min < Q < 10,8 l/min.) at ($0{,}01^{+0{,}0005}_{0}$) MPa [($0{,}1^{+0{,}005}_{0}$) bar]
			Class H 0,18 l/s ≤ Q (10,8 l/min ≤ Q) at ($0{,}01^{+0{,}0005}_{0}$) MPa [($0{,}1^{+0{,}005}_{0}$) bar]
Temperature	T ≤ 70°C	T ≤ 42°C	

Documents
Document Sharing Hub
Full document details: BS EN 1113:2015

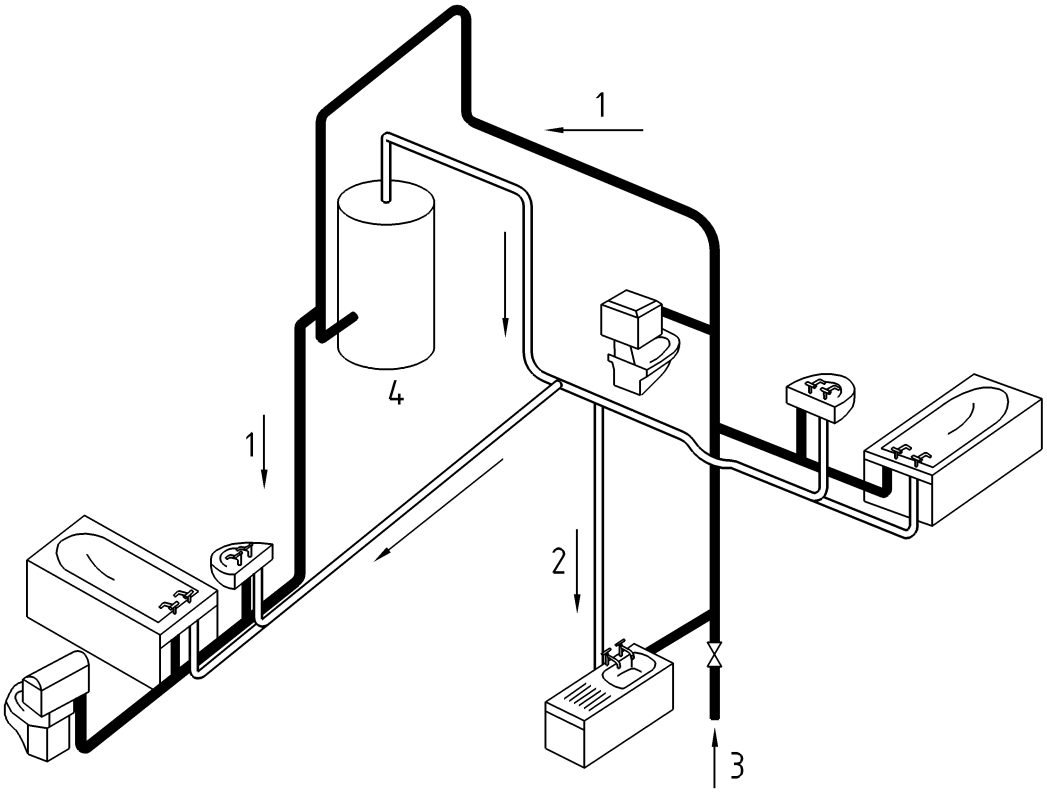

Key

1 cold water

2 hot Water

3 mains supply pipe (Supply pressures up to 10 bar)

4 water heater

Figure 1 — Type 1 Water supply system with a pressure range of (0,05 – 1,0) MPa [(0,5 - 10) bar]

Documents
Document Sharing Hub
Full document details: BS EN 1113:2015