BS EN 1124-4:2013

Incorporating corrigendum December 2013

BSI Standards Publication

Pipes and fittings of longitudinally welded stainless steel pipes with spigot and socket for wastewater systems

Part 4: Components for vacuum drainage systems and for drainage systems on ships

bsi.

...making excellence a habit.™

AVA Documents
Document Sharing Hub

National foreword

This British Standard is the UK implementation of EN 1124-4:2013. It supersedes BS EN 1124-4:2005 which is withdrawn.

The UK participation in its preparation was entrusted to Technical Committee B/505, Wastewater engineering.

A list of organizations represented on this committee can be obtained on request to its secretary.

This publication does not purport to include all the necessary provisions of a contract. Users are responsible for its correct application.

© The British Standards Institution 2013.
Published by BSI Standards Limited 2013

ISBN 978 0 580 84985 5

ICS 23.040.10; 23.040.40; 47.020.30

Compliance with a British Standard cannot confer immunity from legal obligations.

This British Standard was published under the authority of the Standards Policy and Strategy Committee on 30 November 2013.

Amendments/corrigenda issued since publication

Date	Text affected
31 December 2013	Implementation of CEN correction notice 6 November 2013: subclauses 6.2.2.4 and 6.2.2.7 corrected

Documents
Document Sharing Hub

Full document details: BS EN 1124-4:2013

EUROPEAN STANDARD

NORME EUROPÉENNE

EUROPÄISCHE NORM

EN 1124-4

October 2013

ICS 23.040.10; 23.040.40; 47.020.30

English Version

Pipes and fittings of longitudinally welded stainless steel pipes with spigot and socket for wastewater systems - Part 4: Components for vacuum drainage systems and for drainage systems on ships

Tubes et raccords de tubes soudés longitudinalement en acier inoxydable, à manchon enfichable pour réseaux d'assainissement - Partie 4: Composants des réseaux d'évacuation sous vide et par gravité installés sur les navires

Rohre und Formstücke aus längsnahtgeschweißtem nichtrostendem Stahlrohr mit Steckmuffe für Abwasserleitungen - Teil 4: Bauteile für Unterdruckentwässerungssysteme und Entwässerungssysteme auf Schiffen

This European Standard was approved by CEN on 7 September 2013.

CEN members are bound to comply with the CEN/CENELEC Internal Regulations which stipulate the conditions for giving this European Standard the status of a national standard without any alteration. Up-to-date lists and bibliographical references concerning such national standards may be obtained on application to the CEN-CENELEC Management Centre or to any CEN member.

This European Standard exists in three official versions (English, French, German). A version in any other language made by translation under the responsibility of a CEN member into its own language and notified to the CEN-CENELEC Management Centre has the same status as the official versions.

CEN members are the national standards bodies of Austria, Belgium, Bulgaria, Croatia, Cyprus, Czech Republic, Denmark, Estonia, Finland, Former Yugoslav Republic of Macedonia, France, Germany, Greece, Hungary, Iceland, Ireland, Italy, Latvia, Lithuania, Luxembourg, Malta, Netherlands, Norway, Poland, Portugal, Romania, Slovakia, Slovenia, Spain, Sweden, Switzerland, Turkey and United Kingdom.

EUROPEAN COMMITTEE FOR STANDARDIZATION
COMITÉ EUROPÉEN DE NORMALISATION
EUROPÄISCHES KOMITEE FÜR NORMUNG

CEN-CENELEC Management Centre: Avenue Marnix 17, B-1000 Brussels

© 2013 CEN All rights of exploitation in any form and by any means reserved worldwide for CEN national Members.

Ref. No. EN 1124-4:2013: E

Documents
Document Sharing Hub

Full document details: BS EN 1124-4:2013

Foreword

This document (EN 1124-4:2013) has been prepared by Technical Committee CEN/TC 165 “Waste water engineering”, the secretariat of which is held by DIN.

This European Standard shall be given the status of a national standard, either by publication of an identical text or by endorsement, at the latest by April 2014, and conflicting national standards shall be withdrawn at the latest by April 2014.

Attention is drawn to the possibility that some of the elements of this document may be the subject of patent rights. CEN [and/or CENELEC] shall not be held responsible for identifying any or all such patent rights.

This document supersedes EN 1124-4:2005.

In relation to the previous version of the standard, the following main modifications have been made:

a) Due to the newest market developments and new installation methods, several components of system X and system S have been adjusted to these conditions (introduction of new products).

b) Dimensional requirements have been extended and specified for compatibility with gravity drainage systems for buildings.

The European Standard on pipes and fittings of longitudinally welded stainless steel pipes with spigot and socket for wastewater systems consists of the following parts:

— *Part 1: Requirements, testing, quality control*

— *Part 2: System S – Dimensions*

— *Part 3: System X – Dimensions*

— *Part 4: Components for vacuum drainage systems and drainage systems on ships*

According to the CEN-CENELEC Internal Regulations, the national standards organisations of the following countries are bound to implement this European Standard: Austria, Belgium, Bulgaria, Croatia, Cyprus, Czech Republic, Denmark, Estonia, Finland, Former Yugoslav Republic of Macedonia, France, Germany, Greece, Hungary, Iceland, Ireland, Italy, Latvia, Lithuania, Luxembourg, Malta, Netherlands, Norway, Poland, Portugal, Romania, Slovakia, Slovenia, Spain, Sweden, Switzerland, Turkey and the United Kingdom.

Documents
Document Sharing Hub
Full document details: BS EN 1124-4:2013

Contents

Page

Introduction 4
1 Scope 5
2 Normative references 5
3 Terms and definitions 6
4 Symbols and abbreviations 6
5 Pipes and fittings requirements 6
5.1 General 6
5.2 Operating pressure, operating temperature and tightness 6
6 Dimensions 7
6.1 General and tolerances 7
6.2 Pipes, fittings and seals used for system X in accordance with EN 1124-3 8
6.2.1 Sockets 8
6.2.2 Pipes and fittings for deck drainage and gravity drainage systems (gravity systems) 9
6.2.3 Components for vacuum systems 17
6.2.4 Other fittings 17
6.2.5 Seals for system X 17
6.3 Pipes, fittings and seals used for system S as specified in EN 1124-2 19
6.3.1 Sockets for gravity drainage systems (gravity systems) 19
6.3.2 Pipes and fittings for deck drainage and gravity drainage systems (gravity systems) 20
6.3.3 Components for vacuum systems 30
6.3.4 Other fittings 30
6.3.5 Seals for system S 30
7 Testing 30
8 Assessment of conformity 31

AVA Documents
Document Sharing Hub

Full document details: BS EN 1124-4:2013

Introduction

Pipes and fittings of longitudinally welded, stainless steel pipes with spigot and socket for waste water systems as specified in EN 1124-2 and EN 1124-3 are used in gravity drainage systems in buildings. For vacuum drainage systems and drainage systems on ships, it was necessary to specify additional requirements and further dimensional specifications for components and joints used in these systems. Components specified in this European Standard are used for vacuum drainage systems and for drainage systems in shipbuilding.

Documents
Document Sharing Hub
Full document details: BS EN 1124-4:2013

1 Scope

This European Standard specifies requirements, dimensions and tolerances for pipes and fittings of longitudinally welded, stainless steel pipe with spigot and socket used for vacuum drainage systems inside and outside buildings and for gravity and vacuum drainage systems on ships and floating maritime structures[1)] :

— above freeboard deck as long as the heeling is taken into account in the event of damage when installed above freeboard deck on passenger ships;

— inside a watertight compartment below freeboard deck;

— with direct connection to the outboard (not permitted below freeboard deck);

— inside tanks as long as these are not filled with foreign media and are not cargo tanks.

On well-anchored maritime structures, this European Standard applies to pipes and fittings of longitudinally welded stainless steel pipe with spigot and socket used in drainage systems in the accommodation area.

Pipes and fittings according to this European Standard may also be used in central vacuum cleaning installations, in vacuum suction lifting installations, in chip transporting installations and in other waste water and process pipes as long as the media to be discharged do not damage the components or the health and safety of the personnel.

For other pipes, this European Standard only applies if agreed with the relevant operators and following prior consultation with the manufacturer.

This European Standard contains a designation system for the different types of pipes and fittings for easy identification of each component.

This European Standard is only applicable in conjunction with EN 1124-1.

2 Normative references

The following documents, in whole or in part, are normatively referenced in this document and are indispensable for its application. For dated references, only the edition cited applies. For undated references, the latest edition of the referenced document (including any amendments) applies.

EN 681-1, *Elastomeric seals — Material requirements for pipe joint seals used in water and drainage applications — Part 1: Vulcanized rubber*

EN 1124-1:1999, *Pipes and fittings of longitudinally welded stainless steel pipes with spigot and socket for waste water systems — Part 1: Requirements, testing, quality control*

EN 1124-2, *Pipes and fittings of longitudinally welded stainless steel pipes with spigot and socket for waste water systems — Part 2: System S — Dimensions*

EN 1124-3, *Pipes and fittings of longitudinally welded stainless steel pipes with spigot and socket for waste water systems — Part 3: System X — Dimensions*

EN 10025 (all parts), *Hot rolled products of structural steels*

EN 10226-1, *Pipe threads where pressure tight joints are made on the threads — Part 1: Taper external threads and parallel internal threads — Dimensions, tolerances and designation*

---

1) In shipbuilding, the terms "Gravity and vacuum system" are used for this.

AVA Documents
Document Sharing Hub

Full document details: BS EN 1124-4:2013

EN 12109, *Vacuum drainage systems inside buildings*

EN ISO 15749-2, *Ships and marine technology — Drainage systems on ships and marine structures — Part 2: Sanitary drainage, drain piping for gravity system (ISO 15749-2)*

EN ISO 15749-3, *Ships and marine technology — Drainage systems on ships and marine structures — Part 3. Sanitary drainage, drain piping for vacuum system (ISO 15749-3)*

3 Terms and definitions

For the purposes of this document, the terms and definitions given in EN 1124-1:1999 apply.

4 Symbols and abbreviations

DN/ID nominal size with regard to the inside diameter

DN/OD nominal size with regard to the outside diameter

d diameter

t socket depth

s wall thickness

l effective length

s_2 wall thickness of weld-in sleeve

m_{10} thread size

k diameter of hole sequence

5 Pipes and fittings requirements

5.1 General

Components covered by this European Standard shall meet the requirements of EN 1124-1. They shall be suitable for use in drainage systems for the discharge of black water, grey water and waste water from process pipe systems.

For weld-in sleeves and flanges, weldable material, e.g. S235 JRG2 as specified in the EN 10025 series or the specifications of the classification societies, valid at the place of use of the product shall be used.

The suitability of these pipes and fittings for other media shall be agreed with the manufacturer.

5.2 Operating pressure, operating temperature and tightness

The components shall be dimensioned so that they are reliably tight under the operating conditions given in Table 1 and Table 2 with the indicated socket shape, outside diameter and type being used.

Documents
Document Sharing Hub
Full document details: BS EN 1124-4:2013

Table 1 — Type of socket joint according to operating data for pipe system X

Pipe system for	Operating pressure	Operating temperature	Socket joint		
			Seal [a]	Type	Socket shape [b]
Deck drainage	Up to 0,5 bar	Up to 90 °C in cyclical duty [c]	M 1, M 5	Inserted	1 A, 2 A, 3 A
Gravity drainage (sanitary drain pipe in gravity system)					
Vacuum drainage (sanitary drain pipe in vacuum system)	-0,3 bar to -0,6 bar (corresponding to 0,7 bar to 0,4 bar absolute pressure)		M 1	Inserted and bonded	1 A, 2 A, 3 A
	Up to -0,8 bar (corresponding to 0,2 bar absolute pressure)		M 5	Inserted	1 A, 2 A, 3 A
			M 4	Inserted	1 V or 3 V
Vent line	Following agreement with the relevant supervisory bodies and discussion with the manufacturer		M 1, M 6	Inserted and bonded with shear protection	1 A, 2 A, 3 A

[a] Requirements in accordance with EN 1124-1.
[b] Socket shapes A in accordance with EN 1124-3; socket shape V in accordance with 6.2.1.
[c] For higher temperatures, the manufacturer shall be consulted.

Table 2 — Type of operating data for pipe system S

Pipe system for	Operating pressure	Operating temperature	DN/OD
Deck drainage	Up to 0,5 bar	Up to 90 °C in cyclical duty [a]	40 to 160
Gravity drainage (sanitary drain pipe in gravity system)			
Vacuum drainage (sanitary drain pipe in vacuum system)	Up to -0,6 bar (corresponding to 0,4 bar absolute pressure)		110 to 250
	Up to -0,8 bar (corresponding to 0,2 bar absolute pressure)		50 to 82
Vent line	Following agreement with the relevant supervisory bodies and discussion with the manufacturer		40 to 250

[a] For higher temperatures, the manufacturer shall be consulted.

6 Dimensions

6.1 General and tolerances

The figures are simplified drawings. The dimensions given shall be followed.

Documents
Document Sharing Hub
Full document details: BS EN 1124-4:2013

Where no tolerances are given in this European Standard, the tolerances specified in EN 1124-2 and EN 1124-3 shall be adhered to for system S and system X respectively.

6.2 Pipes, fittings and seals used for system X in accordance with EN 1124-3

6.2.1 Sockets

6.2.1.1 Sockets for gravity drainage systems (gravity systems)

For system X, the socket shapes and socket dimensions shall conform to type A in EN 1124-3. If the designation of the fittings does not specify the socket shape, they are of socket shape 1 A. Dimensions not specified shall be chosen accordingly.

6.2.1.2 Sockets for vacuum operation (vacuum system)

For system X for vacuum operation, components in accordance with EN 1124-3 with socket shape A in conjunction with seals of shape M 1 or M 5 or components in accordance with this European Standard with socket shapes as shown in Figure 1 and dimensions in Table 3 shall be used. The socket shape shall be designated V instead of A for these components.

If the designation of the fittings does not contain the socket shapes, these shall be shape 1 A or 1 V. Dimensions not specified shall be chosen accordingly.

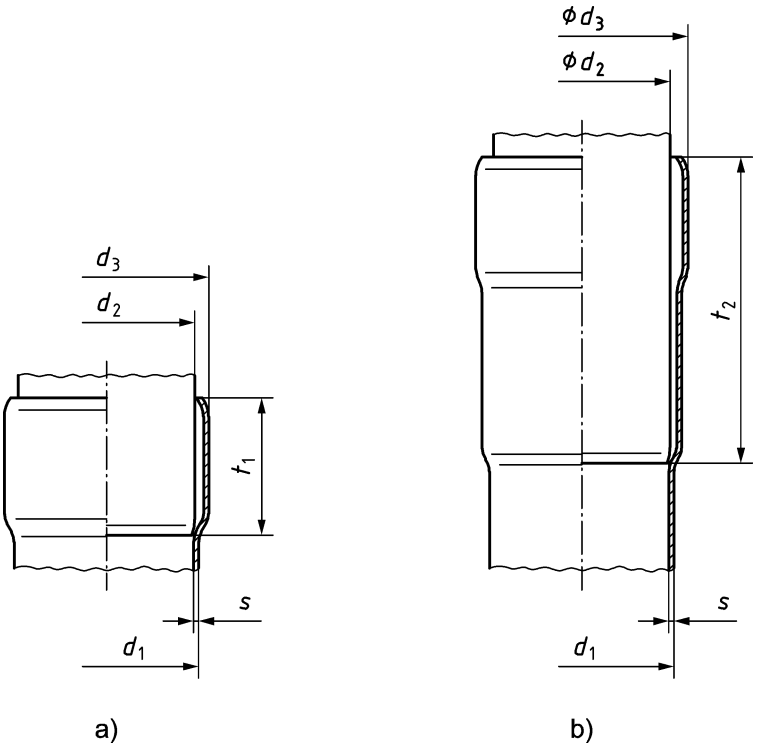

Key

a) socket shape 1 V, vacuum socket
b) socket shape 3 V, long vacuum socket

Figure 1 — Socket shapes

Documents
Document Sharing Hub
Full document details: BS EN 1124-4:2013

Table 3 — Socket dimensions

Dimensions in millimetres

Nominal size DN/ID	Socket dimensions							
	d_1 [a]	s [b]	d_2	d_3	Tolerances for d_1 to d_3	t_1	t_2	Tolerances for t_1 to t_2
40	42	1,5 ± 0,15	45	48	± 0,6	38	70	$^{+4}_{-2}$
50	53		56	60		41	90	
70	73	1,6 ± 0,16	76	81	± 0,7	55	120	

[a] Pipe ends slightly retracted.

[b] The indications on wall thickness refer to special steel pipes (heavy series) in accordance with EN 1124-3.

6.2.2 Pipes and fittings for deck drainage and gravity drainage systems (gravity systems)

6.2.2.1 General

For gravity systems in accordance with EN ISO 15749-2 and for deck drainage systems made of system X components, pipes and fittings with socket shape A and seals of shape M 1 or M 5 as indicated in Table 4 shall be used.

Table 4 — List of pipes, fittings and seals

Designation	Shape	Clause or EN number
Pipes	B 1 or B 2	EN 1124-3
Bend	C 1	EN 1124-3
Bend with stilling section	C 3	EN 1124-3
Branches	D 1, D 11, D 21	EN 1124-3
Transition pipe	F 2	EN 1124-3
Repair coupling	F 4	EN 1124-3
Insertion coupling	F 5	EN 1124-3
Connecting pieces with weld-in sleeve	R 1 A, R 1 B, T 1, T 1 S	6.2.2.2 and 6.2.2.3
Connecting pieces for WC	J 1, J 2, J 3, J 4	6.2.2.4
Transition pieces	E 1, E 2	6.2.2.5
Threaded connectors	L 1, L 3	6.2.2.6
Flange connecting pieces	M 1, M 2	6.2.2.7
Other fittings	—	6.2.4, EN 1124-3

AVA Documents
Document Sharing Hub

Full document details: BS EN 1124-4:2013