BS EN 12098-3:2017

BSI Standards Publication

Energy Performance of Buildings — Controls for heating systems

Part 3: Control equipment for electrical heating systems — Modules M3-5,6,7,8

Documents
Document Sharing Hub

Full document details: BS EN 12098-3:2017

National foreword

This British Standard is the UK implementation of EN 12098-3:2017. It supersedes BS EN 12098-3:2013, which is withdrawn.

The UK participation in its preparation was entrusted to Technical Committee RHE/16, Performance requirements for control systems.

A list of organizations represented on this committee can be obtained on request to its secretary.

This publication does not purport to include all the necessary provisions of a contract. Users are responsible for its correct application.

© The British Standards Institution 2017
Published by BSI Standards Limited 2017

ISBN 978 0 580 91970 1

ICS 97.120; 97.100.10

Compliance with a British Standard cannot confer immunity from legal obligations.

This British Standard was published under the authority of the Standards Policy and Strategy Committee on 30 June 2017.

Amendments/corrigenda issued since publication

Date	Text affected

Documents
Document Sharing Hub

Full document details: BS EN 12098-3:2017

EUROPEAN STANDARD

NORME EUROPÉENNE

EUROPÄISCHE NORM

EN 12098-3

May 2017

ICS 97.100.10; 97.120

Supersedes EN 12098-3:2013

English Version

Energy Performance of Buildings - Controls for heating systems - Part 3: Control equipment for electrical heating systems - Modules M3-5,6,7,8

Performance énergétique des bâtiments - Régulation pour les systèmes de chauffage - Partie 3 : Équipement de régulation pour les systèmes de chauffage électrique - Modules M3-5, 6, 7, 8

Engergieeffizienz von Gebäuden - Mess-, Steuer- und Regeleinrichtungen für Heizungen - Teil 3: Regeleinrichtungen für Elektroheizungen - Module M3-5, 6, 7 ,8

This European Standard was approved by CEN on 27 February 2017.

CEN members are bound to comply with the CEN/CENELEC Internal Regulations which stipulate the conditions for giving this European Standard the status of a national standard without any alteration. Up-to-date lists and bibliographical references concerning such national standards may be obtained on application to the CEN-CENELEC Management Centre or to any CEN member.

This European Standard exists in three official versions (English, French, German). A version in any other language made by translation under the responsibility of a CEN member into its own language and notified to the CEN-CENELEC Management Centre has the same status as the official versions.

CEN members are the national standards bodies of Austria, Belgium, Bulgaria, Croatia, Cyprus, Czech Republic, Denmark, Estonia, Finland, Former Yugoslav Republic of Macedonia, France, Germany, Greece, Hungary, Iceland, Ireland, Italy, Latvia, Lithuania, Luxembourg, Malta, Netherlands, Norway, Poland, Portugal, Romania, Serbia, Slovakia, Slovenia, Spain, Sweden, Switzerland, Turkey and United Kingdom.

EUROPEAN COMMITTEE FOR STANDARDIZATION
COMITÉ EUROPÉEN DE NORMALISATION
EUROPÄISCHES KOMITEE FÜR NORMUNG

CEN-CENELEC Management Centre: Avenue Marnix 17, B-1000 Brussels

© 2017 CEN All rights of exploitation in any form and by any means reserved worldwide for CEN national Members.

Ref. No. EN 12098-3:2017 E

Documents
Document Sharing Hub

Full document details: BS EN 12098-3:2017

Contents

Page

European foreword ... 4
Introduction ... 5
1 Scope ... 6
2 Normative references ... 8
3 Terms and definitions ... 8
4 Symbols, subscripts and abbreviations ... 16
4.1 Symbols ... 16
4.2 Subscripts ... 16
5 Functionality ... 16
5.1 Functional objective ... 16
5.2 Control equipment functionality ... 17
6 Requirements ... 18
6.1 Data protection ... 18
6.2 Characteristic heating curve ... 18
6.3 Input signal – Sensors ... 18
6.4 Controller operation modes ... 18
6.4.1 General ... 18
6.4.2 Comfort operation mode ... 19
6.4.3 Economy operation mode ... 19
6.4.4 Building protection operation mode ... 19
6.4.5 Automatic operation mode ... 19
6.5 Frost protection ... 19
6.6 Additional functions ... 19
6.6.1 General ... 19
6.6.2 Summer/winter switch function ... 19
6.6.3 Set back function ... 19
6.6.4 Optimum start function ... 20
6.6.5 Optimum stop function ... 20
6.7 Switching times ... 20
6.8 Override mode ... 20
6.9 Parameter settings ... 21
6.10 Factory settings / default values ... 21
6.10.1 Characteristic heating curve ... 21
6.10.2 Switching times / operating condition ... 21
6.11 Switching relays ... 21
6.12 Electrical requirements ... 21
6.12.1 Electrical connections ... 21
6.12.2 Supply voltage ... 21
6.12.3 Electrical safety ... 21
6.12.4 Electromagnetic compatibility ... 22
6.13 Degree of protection ... 22
6.14 Environmentally induced stress due to temperature ... 22
6.15 Materials ... 22
6.16 Use of graphical symbols ... 22

Documents
Document Sharing Hub

Full document details: BS EN 12098-3:2017

7 Test methods ... 22
7.1 Data Protection ... 22
7.2 Controller operation modes ... 22
7.3 Controller characteristic heating curve ... 22
7.4 Frost protection ... 25
7.5 Switching times ... 25
7.6 Manual override mode ... 25
7.7 Optimum start-stop function ... 25
7.7.1 General ... 25
7.7.2 Test conditions ... 26
7.7.3 Test run ... 27
7.7.4 Test results start optimization ... 27
7.7.5 Test results stop optimization ... 29
7.8 Set back ... 29
7.9 Parameter settings ... 29
7.10 Factory settings ... 29
7.11 Switching relays ... 30
7.12 Electrical test ... 30
7.13 Degrees of protection ... 30
7.14 Environmental individual stress due to temperature ... 30

8 Marking ... 30

9 Documentation ... 30
9.1 Technical documents ... 30
9.2 Technical Specifications ... 30
9.2.1 Controller ... 30
9.2.2 Output signals ... 31
9.2.3 Input signals (sensors) ... 31
9.3 Instruction installation ... 31
9.4 User guideline ... 31

Bibliography ... 32

Documents
Document Sharing Hub

Full document details: BS EN 12098-3:2017

European foreword

This document (EN 12098-3:2017) has been prepared by Technical Committee CEN/TC 247 "Building Automation, Controls and Building Management", the secretariat of which is held by SNV.

This European Standard shall be given the status of a national standard, either by publication of an identical text or by endorsement, at the latest by November 2017, and conflicting national standards shall be withdrawn at the latest by November 2017.

Attention is drawn to the possibility that some of the elements of this document may be the subject of patent rights. CEN shall not be held responsible for identifying any or all such patent rights.

This document supersedes EN 12098-3:2013.

This document has been prepared under a mandate [12] given to CEN by the European Commission and the European Free Trade Association.

This document is part of the set of standards on the energy performance of buildings (the set of EPB standards).

In case this standard is used in the context of national or regional legal requirements, mandatory choices may be given at national or regional level for such specific applications, in particular for the application within the context of EU Directives transposed into national legal requirements.

Further target groups are users of the voluntary common European Union certification scheme for the energy performance of non-residential buildings (EPBD art.11.9) and any other regional (e.g. Pan European) parties wanting to motivate their assumptions by classifying the building energy performance for a dedicated building stock.

According to the CEN-CENELEC Internal Regulations, the national standards organisations of the following countries are bound to implement this European Standard: Austria, Belgium, Bulgaria, Croatia, Cyprus, Czech Republic, Denmark, Estonia, Finland, Former Yugoslav Republic of Macedonia, France, Germany, Greece, Hungary, Iceland, Ireland, Italy, Latvia, Lithuania, Luxembourg, Malta, Netherlands, Norway, Poland, Portugal, Romania, Serbia, Slovakia, Slovenia, Spain, Sweden, Switzerland, Turkey and the United Kingdom.

Documents
Document Sharing Hub

Full document details: BS EN 12098-3:2017

Introduction

This standard is part of a series of standards aiming at international harmonization of the methodology for the assessment of the energy performance of buildings, called "EPB set of standards".

As part of the "EPB set of standards" it complies with the requirements for the set of basic EPB documents EN ISO 52000-1 (see Normative references), CEN/TS 16628 and CEN/TS 16629 (see bibliography [2] and [3]) developed under a mandate given to CEN by the European Commission and the European Free Trade Association (Mandate M/480).

The standards issued by TC 247 for M/480 belong to the EPB set of standards and are in line with the over-arching standard (EN ISO 52000-1) and drafted in accordance with the basic principles and detailed technical rules developed in the Phase I of the mandate.

Also these standards are clearly identified in the modular structure developed to ensure a transparent and coherent EPB standard set. BAC (Building Automation and Control) is identified in the modular structure as Technical Building System M10. However, the standards of TC 247 deal with control accuracy, control functions and control strategies using standards communications protocol (these last standards do not belong to the EPB standards set).

To avoid a duplication of calculation due to the BAC (avoid double impact), no calculation are done in BAC EPB standard set, but in each underlying standard of EPB set of standards (from M1 to M9 in the Modular Structure), an IDENTIFIER developed and present in the M10 covered by EN 15232-1 is used where appropriate. These way of interaction is described in detailed in the Technical Report (CEN ISO/TR 52000-2) accompanying the over-arching standard. As consequence, the Annex A and Annex B concept as EXCEL sheet with the calculation formulas used in the EPB standards are not applicable for the standards issued by TC 247 for M/480.

The main target groups of this standard are all the users of the set of EPB standards (e.g. architects, engineers, regulators).

Further target groups are parties wanting to motivate their assumptions by classifying the building energy performance for a dedicated building stock.

More information is provided in the Technical Report accompanying this standard (CEN/TR 12098-7:2015 [5]).

This third edition cancels and replaces the second edition EN 12098-3:2013.

The most important changes are:

— respect the presentation of this project in the frame EPB in accordance with the drafting rules;

— Clause 6.7 Switching times and Table 2 introducing networked clocks improvements in line with EN 12098-5 modifications.

AVA Documents
Document Sharing Hub

Full document details: BS EN 12098-3:2017

1 Scope

This European Standard applies to electronic control equipment for heating systems with direct electrical emission, which have an integrated outside compensated function and or optimum start/stop function.

This control equipment controls the distribution and/or the generation of heat in relation to the outside temperature and time and other reference variables.

This European Standard also covers controllers that contain an integrated optimum start or an optimum start-stop control function. The controller modulates heating or control modes of electronic individual zone or emitter control equipment.

Safety requirements on heating systems remain unaffected by this standard. The dynamic behaviour of the local thermostats, sensors, or actuators is not covered in this standard.

A multi-distribution and/or multi-generation system needs a coordinated solution to prevent undesired interaction and is not part of this standard.

Table 1 shows the relative position of this standard within the set of EPB standards in the context of the modular structure as set out in EN ISO 52000-1.

NOTE 1 In CEN ISO/TR 52000-2 the same table can be found, with, for each module, the numbers of the relevant EPB standards and accompanying technical reports that are published or in preparation.

NOTE 2 The modules represent EPB standards, although one EPB standard may cover more than one module and one module may be covered by more than one EPB standard, for instance a simplified and a detailed method respectively.

Documents
Document Sharing Hub

Full document details: BS EN 12098-3:2017

Table 1 — Position of this standard (in casu M3–5, 6, 7, 8), within the modular structure of the set of EPB standards

	Overarching	Building (as such)	Technical Building System									
Submodule	**Descriptions**	**Descriptions**	**Descriptions**	**Heating**	**Cooling**	**Ventilation**	**Humidification**	**Dehumidification**	**Domestic Hot waters**	**Lighting**	**Building automation and control**	**PV, wind,..**
sub1	**M1**	**M2**		**M3**	**M4**	**M5**	**M6**	**M7**	**M8**	**M9**	**M10**	**M11**
1	General	General	General									
2	Common terms and definitions; symbols, units and subscripts	Building Energy Needs	Needs									
3	Application	(Free) Indoor Conditions without Systems	Maximum Load and Power									
4	Ways to Express Energy Performance	Ways to Express Energy Performance	Ways to Express Energy Performance									
5	Building Functions and Building Boundaries	Heat Transfer by Transmission	Emission and control	x								
6	Building Occupancy and Operating Conditions	Heat Transfer by Infiltration and Ventilation	Distribution and control	x								
7	Aggregation of Energy Services and Energy Carriers	Internal Heat Gains	Storage and control	x								
8	Building Partitioning	Solar Heat Gains	Generation and control	x								
9	Calculated Energy Performance	Building Dynamics (thermal mass)	Load dispatching and operating conditions									
10	Measured Energy Performance	Measured Energy Performance	Measured Energy Performance									
11	Inspection	Inspection	Inspection									
12	Ways to Express Indoor Comfort		BMS									
13	External Environment Conditions											
14[a]	Economic Calculation											

a The shaded modules are not applicable.

AVA Documents
Document Sharing Hub

Full document details: BS EN 12098-3:2017

2 Normative references

The following documents, in whole or in part, are normatively referenced in this document and are indispensable for its application. For dated references, only the edition cited applies. For undated references, the latest edition of the referenced document (including any amendments) applies.

EN 60038, *CENELEC standard voltages (IEC 60038)*

EN 60529, *Degrees of protection provided by enclosures (IP Code) (IEC 60529)*

EN 60730-1, *Automatic electrical controls for household and similar use — Part 1: General requirements (IEC 60730-1)*

EN ISO 7345:1995, *Thermal insulation - Physical quantities and definitions (ISO 7345:1987)*

EN ISO 52000-1:2017, *Energy performance of buildings - Overarching EPB assessment - Part 1: General framework and procedures (ISO 52000-1:2017)*

3 Terms and definitions

For the purposes of this document, the terms and definitions given in EN ISO 7345:1995, in EN ISO 52000-1:2017 and the following apply.

3.1
outside temperature compensated controller
OTC controller
controller optimising and/or regulating the generation of heat in relation to the outside temperature, time and optionally other reference variables (e.g. room temperature)

Note 1 to entry: The outside temperature compensated function calculates the heating power in relation to the outside temperature, based on the heating curve.

Note 2 to entry: The outside temperature optimum start-stop function calculates the pre-heat time and/or stop time to reach the comfort temperature level in relation with the outside temperature, switch time and several parameters (e.g. room temperature, tariff).

3.2
control equipment
equipment which consists of OTC controller, and connectors for sensor input signals and output signals but does not include the sensors and actuating equipment (see Figure 1)

Documents
Document Sharing Hub

Full document details: BS EN 12098-3:2017

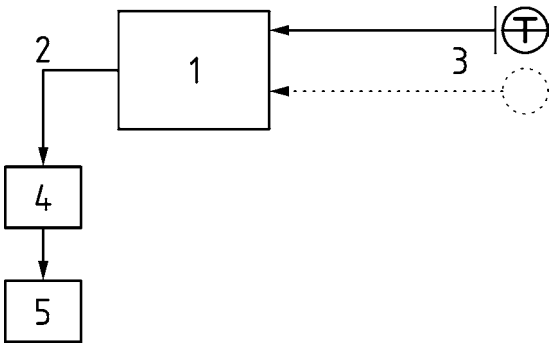

Key

1 OTC controller
2 output signals
3 input signals: reference variables
4 actuating equipment
5 heat generation and distribution

Figure 1 — Control equipment for electrical heating systems

3.3
actuating equipment
equipment by which the controller affects the controlled variable

3.4
controlled variable
heating emitted power

3.5
output signal
signal generated by the OTC controller for operating the local thermostat or the actuating equipment

3.6
reference variable
outside temperature with or without other influences or variables (e.g. room temperature) used to determine the setpoint of the controlled variable

Note 1 to entry: The reference variable is an input signal.

3.7
outside temperature
reference variable that is measured with a sensor fitted outside the building, mainly intended to measure the ambient air temperature

3.8
room temperature
resulting temperature in the building arising in comfort, economy or building protection operation mode of the OTC controller

Note 1 to entry: Room temperature can be different for individual rooms.

AVA Documents
Document Sharing Hub
Full document details: BS EN 12098-3:2017