BS EN 12098-3:2022

BSI Standards Publication

Energy performance of buildings — Controls for heating systems

Part 3: Control equipment for electrical heating systems — Modules M3-5,6,7,8

Documents
Document Sharing Hub

Full document details: BS EN 12098-3:2022

National foreword

This British Standard is the UK implementation of EN 12098-3:2022. It supersedes BS EN 12098-3:2017, which is withdrawn. Together with BS EN 12098-1:2022, it supersedes BS EN 12098-5:2017, which will be withdrawn on publication of BS EN 12098-1:2022.

The UK participation in its preparation was entrusted to Technical Committee RHE/16, Performance requirements for control systems.

A list of organizations represented on this committee can be obtained on request to its committee manager.

Contractual and legal considerations

This publication has been prepared in good faith, however no representation, warranty, assurance or undertaking (express or implied) is or will be made, and no responsibility or liability is or will be accepted by BSI in relation to the adequacy, accuracy, completeness or reasonableness of this publication. All and any such responsibility and liability is expressly disclaimed to the full extent permitted by the law.

This publication is provided as is, and is to be used at the recipient's own risk.

The recipient is advised to consider seeking professional guidance with respect to its use of this publication.

This publication is not intended to constitute a contract. Users are responsible for its correct application.

© The British Standards Institution 2023
Published by BSI Standards Limited 2023

ISBN 978 0 539 16570 8

ICS 97.100.10; 97.120

Compliance with a British Standard cannot confer immunity from legal obligations.

This British Standard was published under the authority of the Standards Policy and Strategy Committee on 31 January 2023.

Amendments/corrigenda issued since publication

Date	Text affected

Documents
Document Sharing Hub

Full document details: BS EN 12098-3:2022

EUROPEAN STANDARD

NORME EUROPÉENNE

EUROPÄISCHE NORM

EN 12098-3

November 2022

ICS 97.100.10; 97.120

Supersedes EN 12098-3:2017, EN 12098-5:2017

English Version

Energy performance of buildings - Controls for heating systems - Part 3: Control equipment for electrical heating systems - Modules M3-5,6,7,8

Performance énergétique des bâtiments - Régulation pour les systèmes de chauffage - Partie 3 : Équipement de régulation pour les systèmes de chauffage électrique - Modules M3-5, 6, 7, 8

Energieeffizienz von Gebäuden - Mess-, Steuer- und Regeleinrichtungen für Heizungen - Teil 3: Regeleinrichtungen für Elektroheizungen - Module M3-5, 6, 7,8

This European Standard was approved by CEN on 26 September 2022.

CEN members are bound to comply with the CEN/CENELEC Internal Regulations which stipulate the conditions for giving this European Standard the status of a national standard without any alteration. Up-to-date lists and bibliographical references concerning such national standards may be obtained on application to the CEN-CENELEC Management Centre or to any CEN member.

This European Standard exists in three official versions (English, French, German). A version in any other language made by translation under the responsibility of a CEN member into its own language and notified to the CEN-CENELEC Management Centre has the same status as the official versions.

CEN members are the national standards bodies of Austria, Belgium, Bulgaria, Croatia, Cyprus, Czech Republic, Denmark, Estonia, Finland, France, Germany, Greece, Hungary, Iceland, Ireland, Italy, Latvia, Lithuania, Luxembourg, Malta, Netherlands, Norway, Poland, Portugal, Republic of North Macedonia, Romania, Serbia, Slovakia, Slovenia, Spain, Sweden, Switzerland, Türkiye and United Kingdom.

EUROPEAN COMMITTEE FOR STANDARDIZATION
COMITÉ EUROPÉEN DE NORMALISATION
EUROPÄISCHES KOMITEE FÜR NORMUNG

CEN-CENELEC Management Centre: Rue de la Science 23, B-1040 Brussels

© 2022 CEN All rights of exploitation in any form and by any means reserved worldwide for CEN national Members.

Ref. No. EN 12098-3:2022 E

Documents
Document Sharing Hub

Full document details: BS EN 12098-3:2022

Contents

Page

European foreword 4
Introduction 5
1 Scope 7
2 Normative references 7
3 Terms and definitions 7
4 Symbols, subscripts and abbreviations 15
4.1 Symbols 15
4.2 Subscripts 15
5 Functionality 15
5.1 Functional objective 15
5.2 Control equipment functionality 15
6 Requirements 17
6.1 Data retention 17
6.2 Characteristic heating curve 17
6.3 Input signal – Sensors 17
6.4 Controller operation modes 18
6.5 Frost protection 18
6.6 Additional functions 18
6.7 Switching times 19
6.8 Override mode 20
6.9 Parameter settings 21
6.10 Factory settings / default values 21
6.11 Electrical requirements 23
6.12 Degree of protection 23
6.13 Environmentally induced stress due to temperature 23
6.14 Materials 23
6.15 Use of graphical symbols 23
7 Test methods 24
7.1 Data retention 24
7.2 Controller operation modes 24
7.3 Controller characteristic heating curve 24
7.4 Frost protection 26
7.5 Switching times 27
7.6 Manual override mode 27
7.7 Optimum start-stop function 27
7.8 Set back 31
7.9 Parameter settings 31
7.10 Factory settings 31
7.11 Switching relays 31
7.12 Electrical test 31
7.13 Degrees of protection 31
7.14 Environmental individual stress due to temperature 31
8 Marking 31

Documents
Document Sharing Hub
Full document details: BS EN 12098-3:2022

9 Documentation **32**
9.1 Technical documents **32**
9.2 Technical specifications **32**
9.3 Instruction installation **33**
9.4 User guideline **33**

Bibliography **34**

Documents
Document Sharing Hub
Full document details: BS EN 12098-3:2022

European foreword

This document (EN 12098-3:2022) has been prepared by Technical Committee CEN/TC 247 “Building Automation, Controls and Building Management”, the secretariat of which is held by SNV.

This European Standard shall be given the status of a national standard, either by publication of an identical text or by endorsement, at the latest by May 2023, and conflicting national standards shall be withdrawn at the latest by May 2023.

Attention is drawn to the possibility that some of the elements of this document may be the subject of patent rights. CEN shall not be held responsible for identifying any or all such patent rights.

This document supersedes EN 12098-3:2017 and EN 12098-5:2017.

In comparison with the previous edition, the following technical modifications have been made:

— subclause 6.7 “Switching times” has been updated with new functionalities;

— a new subclause 6.10.3 “Data retention” has been added.

This document has been prepared under a Standardization Request given to CEN by the European Commission and the European Free Trade Association.

This document is part of the set of standards on the energy performance of buildings (the set of EPB standards).

Any feedback and questions on this document should be directed to the users’ national standards body. A complete listing of these bodies can be found on the CEN website.

According to the CEN-CENELEC Internal Regulations, the national standards organisations of the following countries are bound to implement this European Standard: Austria, Belgium, Bulgaria, Croatia, Cyprus, Czech Republic, Denmark, Estonia, Finland, France, Germany, Greece, Hungary, Iceland, Ireland, Italy, Latvia, Lithuania, Luxembourg, Malta, Netherlands, Norway, Poland, Portugal, Republic of North Macedonia, Romania, Serbia, Slovakia, Slovenia, Spain, Sweden, Switzerland, Türkiye and the United Kingdom.

Documents
Document Sharing Hub

Full document details: BS EN 12098-3:2022

Introduction

This document belongs to the family of standards aimed at international harmonization of the methodology for the assessment of the energy performance of buildings. Throughout, this group of standards is referred to as a set called "EPB set of standards".

As part of the "EPB set of standards" it complies with the requirements for the set of basic EPB documents EN ISO 52000-1 (see Clause 2), CEN/TS 16628 and CEN/TS 16629 (see [2] and [3]) developed under a mandate given to CEN by the European Commission and the European Free Trade Association (M/480 [12]).

The standards issued by TC 247 for M/480 belong to the EPB set of standards and are in line with the over-arching standard (EN ISO 52000-1) and drafted in accordance with the basic principles and detailed technical rules developed in the Phase I of the mandate.

Also, these standards are clearly identified in the modular structure developed to ensure a transparent and coherent EPB standard set. BAC (Building Automation and Control) is identified in the modular structure as Technical Building System M10. However, the standards of TC 247 deal with control accuracy, control functions and control strategies using standards communications protocol (these last standards do not belong to the EPB standards set).

To avoid a duplication of calculation due to the BAC (avoid double impact), no calculations are done in the BAC EPB standard set, but in each underlying standard of the EPB set of standards (from M1 to M9 in the Modular Structure), an IDENTIFIER developed and present in the M10 covered by EN ISO 52120-1 is used where appropriate. This way of interaction is described in detail in the Technical Report (CEN ISO/TR 52000-2) accompanying the over-arching standard. As a consequence, the Annex A and Annex B concept as EXCEL sheets with the calculation formulas used in the EPB standards are not applicable for the standards issued by TC 247 for M/480.

The main target groups of this document are all the users of the set of EPB standards (e.g. architects, engineers, regulators).

Further target groups are parties wanting to motivate their assumptions by classifying the building energy performance for a dedicated building stock.

More information is provided in the Technical Report accompanying this document (CEN/TR 12098-7:2022 [5]).

Table 1 shows the relative position of this document within the set of EPB standards in the context of the modular structure as set out in EN ISO 52000-1.

NOTE 1 In CEN ISO/TR 52000-2 the same table can be found, with, for each module, the numbers of the relevant EPB standards and accompanying technical reports that are published or in preparation.

NOTE 2 The modules represent EPB standards, although one EPB standard can cover more than one module and one module can be covered by more than one EPB standard, for instance a simplified and a detailed method, respectively.

Documents
Document Sharing Hub
Full document details: BS EN 12098-3:2022

Table 1 — Position of this document (in casu M3–5, 6, 7, 8), within the modular structure of the set of EPB standards

	Overarching	Building (as such)	Technical Building System									
Submodule	Descriptions	Descriptions	Descriptions	Heating	Cooling	Ventilation	Humidification	Dehumidification	Domestic Hot waters	Lighting	Building automation and control	PV, wind...
sub1	M1	M2		M3	M4	M5	M6	M7	M8	M9	M10	M11
1	General	General	General									
2	Common terms and definitions; symbols, units and subscripts	Building Energy Needs	Needs									
3	Application	(Free) Indoor Conditions without Systems	Maximum Load and Power									
4	Ways to Express Energy Performance	Ways to Express Energy Performance	Ways to Express Energy Performance									
5	Building Functions and Building Boundaries	Heat Transfer by Transmission	Emission and control	x								
6	Building Occupancy and Operating Conditions	Heat Transfer by Infiltration and Ventilation	Distribution and control	x								
7	Aggregation of Energy Services and Energy Carriers	Internal Heat Gains	Storage and control	x								
8	Building Partitioning	Solar Heat Gains	Generation and control	x								
9	Calculated Energy Performance	Building Dynamics (thermal mass)	Load dispatching and operating conditions									
10	Measured Energy Performance	Measured Energy Performance	Measured Energy Performance									
11	Inspection	Inspection	Inspection									
12	Ways to Express Indoor Comfort		BMS									
13	External Environment Conditions											
14	Economic Calculation											
NOTE The shaded modules are not applicable.												

Documents
Document Sharing Hub
Full document details: BS EN 12098-3:2022

1 Scope

This document is applicable to electronic control equipment for heating systems with direct electrical emission, which have an integrated outside compensated function and or optimum start/stop function.

This control equipment controls the distribution and/or the generation of heat in relation to the outside temperature and time and other reference variables.

This document is also applicable to controllers that contain an integrated optimum start or an optimum start-stop control function. The controller modulates heating or control modes of electronic individual zone or emitter control equipment.

Safety requirements on heating systems remain unaffected by this document. The dynamic behaviour of the local thermostats, sensors, or actuators is not covered in this document.

A multi-distribution and/or multi-generation system needs a coordinated solution to prevent undesired interaction and is not part of this document.

2 Normative references

The following documents are referred to in the text in such a way that some or all of their content constitutes requirements of this document. For dated references, only the edition cited applies. For undated references, the latest edition of the referenced document (including any amendments) applies.

EN 60038, *CENELEC standard voltages (IEC 60038)*

EN 60529, *Degrees of protection provided by enclosures (IP Code) (IEC 60529)*

EN 60730-1, *Automatic electrical controls for household and similar use — Part 1: General requirements (IEC 60730-1)*

EN ISO 7345, *Thermal performance of buildings and building components — Physical quantities and definitions (ISO 7345)*

EN ISO 52000-1:2017, *Energy performance of buildings — Overarching EPB assessment — Part 1: General framework and procedures (ISO 52000-1:2017)*

3 Terms and definitions

For the purposes of this document, the terms and definitions given in EN ISO 7345 and EN ISO 52000-1:2017 and the following apply.

ISO and IEC maintain terminology databases for use in standardization at the following addresses:

— ISO Online browsing platform: available at https://www.iso.org/obp

— IEC Electropedia: available at https://www.electropedia.org/

Documents
Document Sharing Hub
Full document details: BS EN 12098-3:2022

3.1
outside temperature compensated controller
OTC controller
controller optimizing and/or regulating the generation of heat in relation to the outside temperature, time and optionally other reference variables (e.g. room temperature)

Note 1 to entry: The outside temperature compensated function calculates the heating power in relation to the outside temperature, based on the heating curve.

Note 2 to entry: The outside temperature optimum start-stop function calculates the pre-heat time and/or stop time to reach the comfort temperature level in relation with the outside temperature, switch time and several parameters (e.g. room temperature, tariff).

3.2
control equipment
equipment which consists of OTC controller and connectors for sensor input signals and output signals but does not include the sensors and actuating equipment (see Figure 1)

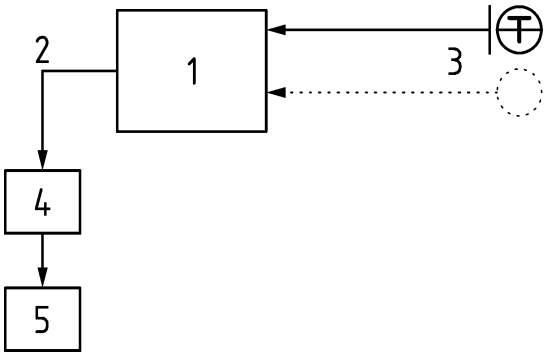

Key
1 OTC controller
2 output signals
3 input signals: reference variables
4 actuating equipment
5 heat generation and distribution

Figure 1 — Control equipment for electrical heating systems

3.3
actuating equipment
equipment by which the controller affects the controlled variable

3.4
controlled variable
heating emitted power

3.5
output signal
signal generated by the OTC controller for operating the local thermostat or the actuating equipment

Documents
Document Sharing Hub
Full document details: BS EN 12098-3:2022

3.6
reference variable
outside temperature with or without other influences or variables (e.g. room temperature) used to determine the setpoint of the controlled variable

Note 1 to entry: The reference variable is an input signal.

3.7
outside temperature
reference variable that is measured with a sensor fitted outside the building, mainly intended to measure the ambient air temperature

3.8
room temperature
resulting temperature in the building arising in comfort, economy or building protection operation mode of the OTC controller

Note 1 to entry: Room temperature can be different for individual rooms.

3.9
characteristic heating curve
relation between the setpoint value of the controlled variable (heating) and the reference variables (outside air temperature) specified by two or more parameters and depending on operation mode and additional variables

Note 1 to entry: The heating is calculated as a function of the characteristic heating curve, based on the outside temperature and the present room temperature setpoint.

3.10
mode
state of a device or system defining the manner by which it performs its functions

3.11
comfort operation mode
mode of operation between the switch-on time and the switch-off time, maintaining comfort room temperature

Note 1 to entry: Mode of operation for normally occupied rooms.

3.12
economy operation mode
mode of operation between the switch-off time and the switch-on time, maintaining a reduced room temperature compared to the comfort room temperature

Note 1 to entry: Economy operation mode is a reduced mode.

3.13
building protection operation mode
mode of operation between the switch-off time and the switch-on time, maintaining a room temperature required for building protection

3.14
automatic operation mode
mode of operation of equipment when significant control functions are not overridden by the user

Note 1 to entry: The operation mode is selected automatically according to the scheduler, actual date and time.

AVA Documents
Document Sharing Hub

Full document details: BS EN 12098-3:2022

3.15
summer/winter switch function
seasonal switch on/off of the heating depending on a function of the outside air temperature

3.16
set back function
function, starting when the operation mode changes from comfort to economy or building protection mode

Note 1 to entry: During set back period, the heating is switched off until the calculated or measured room temperature drops below the economy or building protection setpoint; the operation mode switches back to comfort mode or the calculated switch-on time of the optimization start function is reached.

3.17
optimum start function
function, calculating the optimum pre-heat time to reach the comfort temperature level at the beginning of the comfort time period (see Figure 2) and possibly in relation with energy price rate (see Figure 5)

Note 1 to entry: The optimum start functions and the optimum stop functions are illustrated by Figure 3. Heating periods are different from scheduled occupation periods. These differences, due to thermal inertia, depend mainly on heating loads (or temperature differences). A start and/or stop optimizer controls these switching points, using outside and/or room temperatures or their differences in relation to setpoints.

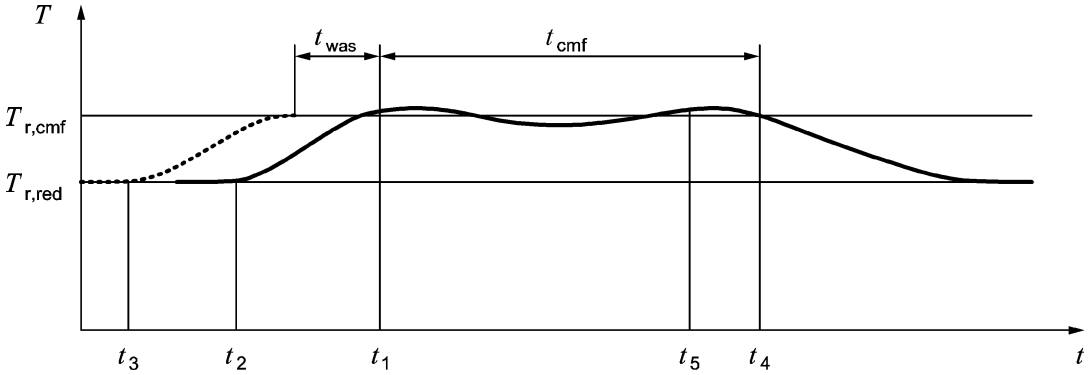

Key

$T_{r,cmf}$ comfort room temperature

$T_{r,red}$ reduced room temperature

t_1 beginning of comfort occupation period

t_2 switch-on time with start optimization (variable start)

t_3 switch-on time without start optimization (fixed start)

t_4 end of comfort occupation period without stop optimization (fixed stop)

t_5 switch-off time with stop optimization (variable stop)

t_{cmf} comfort occupation period: $t_{cmf} = t_4 - t_1$

t_{was} time period of wasted heat (energy saving potential with start optimization)

NOTE $t_2 - t_1$ is the optimum start period. $t_5 - t_4$ is the optimum stop period.

Figure 2 — Temperature time curve with optimizer function

Documents
Document Sharing Hub
Full document details: BS EN 12098-3:2022