BS EN 12166:2024

BSI Standards Publication

Copper and copper alloys — Wire for general purposes

Documents
Document Sharing Hub

Full document details: BS EN 12166:2024

National foreword

This British Standard is the UK implementation of EN 12166:2024. It supersedes BS EN 12166:2016, which is withdrawn.

The UK participation in its preparation was entrusted to Technical Committee NFE/34, Copper and copper alloys.

A list of organizations represented on this committee can be obtained on request to its committee manager.

Contractual and legal considerations

This publication has been prepared in good faith, however no representation, warranty, assurance or undertaking (express or implied) is or will be made, and no responsibility or liability is or will be accepted by BSI in relation to the adequacy, accuracy, completeness or reasonableness of this publication. All and any such responsibility and liability is expressly disclaimed to the full extent permitted by the law.

This publication is provided as is, and is to be used at the recipient's own risk.

The recipient is advised to consider seeking professional guidance with respect to its use of this publication.

This publication is not intended to constitute a contract. Users are responsible for its correct application.

This publication has been prepared under a mandate given to the European Standards Organizations by the European Commission and the European Free Trade Association. It is intended to support requirements of the EU legislation detailed in the European Foreword. A European Annex, usually Annex ZA or ZZ, describes how this publication relates to that EU legislation.

For the Great Britain market (England, Scotland and Wales), if UK Government has designated this publication for conformity with UKCA marking (or similar) legislation, it may contain an additional National Annex. Where such a National Annex exists, it shows the correlation between this publication and the relevant UK legislation. If there is no National Annex of this kind, the relevant Annex ZA or ZZ in the body of the European text will indicate the relationship to UK regulation applicable in Great Britain. References to EU legislation may need to be read in accordance with the UK designation and the applicable UK law. Further information on designated standards can be found at www.bsigroup.com/standardsandregulation.

For the Northern Ireland market, UK law will continue to implement relevant EU law subject to periodic confirmation. Therefore Annex ZA/ZZ in the European text, and references to EU legislation, are still valid for this market.

UK Government is responsible for legislation. For information on legislation and policies relating to that legislation, consult the relevant pages of www.gov.uk.

© The British Standards Institution 2024
Published by BSI Standards Limited 2024

ISBN 978 0 539 20213 7

AVA Documents
Document Sharing Hub

Full document details: BS EN 12166:2024

ICS 77.150.30

Compliance with a British Standard cannot confer immunity from legal obligations.

This British Standard was published under the authority of the Standards Policy and Strategy Committee on 31 October 2024.

Amendments/corrigenda issued since publication

Date	Text affected

Documents
Document Sharing Hub

Documents
Document Sharing Hub

EUROPEAN STANDARD

NORME EUROPÉENNE

EUROPÄISCHE NORM

EN 12166

October 2024

ICS 77.150.30

Supersedes EN 12166:2016

English Version

Copper and copper alloys - Wire for general purposes

Cuivre et alliages de cuivre - Fils pour usages généraux

Kupfer und Kupferlegierungen - Drähte zur allgemeinen Verwendung

This European Standard was approved by CEN on 5 August 2024.

CEN members are bound to comply with the CEN/CENELEC Internal Regulations which stipulate the conditions for giving this European Standard the status of a national standard without any alteration. Up-to-date lists and bibliographical references concerning such national standards may be obtained on application to the CEN-CENELEC Management Centre or to any CEN member.

This European Standard exists in three official versions (English, French, German). A version in any other language made by translation under the responsibility of a CEN member into its own language and notified to the CEN-CENELEC Management Centre has the same status as the official versions.

CEN members are the national standards bodies of Austria, Belgium, Bulgaria, Croatia, Cyprus, Czech Republic, Denmark, Estonia, Finland, France, Germany, Greece, Hungary, Iceland, Ireland, Italy, Latvia, Lithuania, Luxembourg, Malta, Netherlands, Norway, Poland, Portugal, Republic of North Macedonia, Romania, Serbia, Slovakia, Slovenia, Spain, Sweden, Switzerland, Türkiye and United Kingdom.

EUROPEAN COMMITTEE FOR STANDARDIZATION
COMITÉ EUROPÉEN DE NORMALISATION
EUROPÄISCHES KOMITEE FÜR NORMUNG

CEN-CENELEC Management Centre: Rue de la Science 23, B-1040 Brussels

© 2024 CEN All rights of exploitation in any form and by any means reserved worldwide for CEN national Members.

Ref. No. EN 12166:2024 E

Documents
Document Sharing Hub

Full document details: BS EN 12166:2024

Contents

European foreword ... 3
Introduction ... 5
1 Scope ... 6
2 Normative references ... 6
3 Terms and definitions ... 6
4 Designation ... 7
4.1 Material ... 7
4.1.1 General ... 7
4.1.2 Symbol ... 7
4.1.3 Number ... 7
4.2 Material condition ... 7
4.3 Product ... 7
5 Ordering information ... 9
6 Requirements ... 11
6.1 Composition ... 11
6.2 Mechanical properties ... 11
6.3 Grain size ... 11
6.4 Dimensions and tolerances ... 11
6.4.1 Diameter or width across-flats ... 11
6.4.2 Shape tolerances ... 11
6.4.3 Corner and edge geometry (wire with square and rectangular cross-section only) ... 11
6.5 Joins ... 12
6.6 Surface quality ... 12
6.7 Internal inclusion ... 12
7 Sampling ... 13
7.1 General ... 13
7.2 Analysis ... 13
7.3 Tensile, hardness and grain size tests ... 13
8 Test methods ... 13
8.1 Analysis ... 13
8.2 Tensile test ... 13
8.3 Hardness test ... 14
8.4 Estimation of average grain size ... 14
8.5 Retests ... 14
8.6 Rounding of results ... 15
9 Certificate of compliance and inspection documentation ... 15
9.1 Certificate of compliance ... 15
9.2 Inspection documentation ... 15
10 Marking, packaging, labelling ... 15
Annex A (informative) Position of wire cross-section within a coil, reel, spool or drum ... 45
Annex ZA (informative) Relationship between this European Standard and the essential requirements of Directive 2014/68/EU (Pressure equipment Directive) aimed to be covered ... 47
Bibliography ... 48

Documents
Document Sharing Hub
Full document details: BS EN 12166:2024

European foreword

This document (EN 12166:2024) has been prepared by Technical Committee CEN/TC 133 “Copper and copper alloys”, the secretariat of which is held by DIN.

This European Standard shall be given the status of a national standard, either by publication of an identical text or by endorsement, at the latest by April 2025, and conflicting national standards shall be withdrawn at the latest by April 2025.

Attention is drawn to the possibility that some of the elements of this document may be the subject of patent rights. CEN shall not be held responsible for identifying any or all such patent rights.

This document supersedes EN 12166:2016.

In comparison with EN 12166:2016, the following significant technical changes were made:

a) Modification of the definition of diameter or width across-flats in 6.4.1;

b) Modification of 6.4.2 with the introduction of 6.4.2.1 Round wire and 6.4.2.2 Wire with square or regular cross-section;

c) Introduction of eddy current test parameters in 6.6;

d) Introduction of 6.7 Internal inclusion;

e) Addition of CuPb1P (CW113C) in Table 1 and Table 7;

f) Addition of CuSn5 (CW451K) in Table 3 and Table 9;

g) Addition of a new alloy CuZn36Si1P (CW726R) in Table 6 and Table 12;

h) Introduction in the chemical composition Tables of a footnote to explain the meaning of elements for which no upper and lower limits are specified;

i) Modification of the chemical composition of CuZn39Pb3 (CW614N) and CuZn40Pb2 (CW617N) in Table 5;

j) Addition of a new alloy CuZn40Pb1 (CW627N) in Table 5 and Table 11;

k) Addition of Table 19;

l) Addition of Annex ZA.

This document is one of a series of European Standards for the copper and copper alloy products rod, wire, profile and forgings. Other products are specified as follows:

— EN 12163, *Copper and copper alloys — Rod for general purposes*;

— EN 12164, *Copper and copper alloys — Rod for free machining purposes*;

— EN 12165, *Copper and copper alloys — Wrought and unwrought forging stock*;

— EN 12167, *Copper and copper alloys — Profiles and bars for general purposes*;

Documents
Document Sharing Hub

Full document details: BS EN 12166:2024

— EN 12168, *Copper and copper alloys — Hollow rod for free machining purposes*;

— EN 13601, *Copper and copper alloys — Copper rod, bar and wire for general electrical purposes*;

— EN 13602, *Copper and copper alloys — Drawn, round copper wire for the manufacture of electrical conductors*;

— EN 13605, *Copper and copper alloys — Copper profiles and profiled wire for electrical purposes*.

This document has been prepared under a standardization request addressed to CEN by the European Commission. The Standing Committee of the EFTA States subsequently approves these requests for its Member States.

For the relationship with EU Legislation, see informative Annex ZA, which is an integral part of this document.

Any feedback and questions on this document should be directed to the users' national standards body. A complete listing of these bodies can be found on the CEN website.

According to the CEN-CENELEC Internal Regulations, the national standards organisations of the following countries are bound to implement this European Standard: Austria, Belgium, Bulgaria, Croatia, Cyprus, Czech Republic, Denmark, Estonia, Finland, France, Germany, Greece, Hungary, Iceland, Ireland, Italy, Latvia, Lithuania, Luxembourg, Malta, Netherlands, Norway, Poland, Portugal, Republic of North Macedonia, Romania, Serbia, Slovakia, Slovenia, Spain, Sweden, Switzerland, Türkiye and the United Kingdom.

Documents
Document Sharing Hub
Full document details: BS EN 12166:2024

Introduction

The European Committee for Standardization (CEN) draws attention to the fact that it is claimed that compliance with this document may involve the use of a patent concerning the alloy CuZn36Si1P (CW726R) given in 6.1.

CEN takes no position concerning the evidence, validity and scope of this patent right.

The holder of this patent right has ensured the CEN that he is willing to negotiate licenses either free of charge or under reasonable and non-discriminatory terms and conditions with applicants throughout the world. In this respect, the statement of the holder of this patent right is registered with CEN.

Information may be obtained from:

— For CuZn36Si1P (CW726R) information may be obtained from:

  Luvata Oy
  Kuparitie 5
  28330 Pori
  FINLAND

Attention is drawn to the possibility that some of the elements of this document may be the subject of patent rights other than those identified above. CEN shall not be held responsible for identifying any or all such patent rights.

CEN and CENELEC maintain online lists of patents relevant to their standards. Users are encouraged to consult the lists for the most up to date information concerning patents (https://www.cencenelec.eu/european-standardization/ipr-and-patents/patents/).

Due to developing legislation, the composition of a material may be restricted to the composition specified in this European Standard with respect to individual uses (e.g. for the use in contact with drinking water in some Member States of the European Union). These individual restrictions are not part of this European Standard. Nevertheless, for materials for which traditional and major uses are affected, these restrictions are indicated. The absence of an indication, however, does not imply that the material can be used in any application without any legal restriction.

Documents
Document Sharing Hub
Full document details: BS EN 12166:2024

1 Scope

This document specifies the composition, property requirements and dimensional tolerances for copper alloy wire, finally produced by drawing, rolling or extruding, intended for general purposes, spring and fastener manufacturing applications.

The sampling procedures and the methods of test for verification of conformity to the requirements of this document are also specified.

2 Normative references

The following documents are referred to in the text in such a way that some or all of their content constitutes requirements of this document. For dated references, only the edition cited applies. For undated references, the latest edition of the referenced document (including any amendments) applies.

EN 764-5:2014, *Pressure equipment — Part 5: Inspection documentation of metallic materials and compliance with the material specification*

EN 10204:2004, *Metallic products — Types of inspection documents*

EN 17263:2019, *Copper and copper alloys — Eddy current testing on the outer surface of rods, bars, hollow rods and wires for the detection of defects by encircling test coil*

EN ISO 2624:1995, *Copper and copper alloys — Estimation of average grain size (ISO 2624:1990)*

EN ISO 6507-1:2018, *Metallic materials — Vickers hardness test — Part 1: Test method (ISO 6507-1:2018)*

EN ISO 6892-1:2019, *Metallic materials — Tensile testing — Part 1: Method of test at room temperature (ISO 6892-1:2019)*

3 Terms and definitions

For the purposes of this document, the following terms and definitions apply.

ISO and IEC maintain terminology databases for use in standardization at the following addresses:

— IEC Electropedia: available at https://www.electropedia.org/

— ISO Online browsing platform: available at https://www.iso.org/obp

3.1
wire
wound product of uniform cross-section along its whole length

Note 1 to entry: Rectangles may have round or sharp corners.

3.2
deviation from circular form
difference between the maximum and the minimum diameters measured at any one cross-section of a round product

Documents
Document Sharing Hub
Full document details: BS EN 12166:2024

4 Designation

4.1 Material

4.1.1 General

The material is designated either by symbol or by number (see Tables 1 to 6).

4.1.2 Symbol

The material symbol designation is based on the designation system given in ISO 1190-1:1982.

NOTE Although material symbol designations used in this standard might be the same as those in other standards using the designation system given in ISO 1190-1:1982, the detailed composition requirements are not necessarily the same.

4.1.3 Number

The material number designation is in accordance with the system given in EN 1412:2016.

4.2 Material condition

For the purposes of this document, the following designations, which are in accordance with the system given in EN 1173:2008, apply for the material condition:

M	material condition for the product as manufactured, without specified mechanical properties;
R...	material condition designated by the minimum value of tensile strength requirement for the product with mandatory tensile property requirements;
H...	material condition designated by the minimum value of Vickers hardness requirement for the product with mandatory hardness requirements;
S (suffix)	material condition for a product which is stress relieved.
G...	material condition designated by the mid-range value of grain size requirement for the product with mandatory grain size requirements (Table 13).

NOTE The G... material condition is normally applicable only to round wires in the soft material condition made from alloys given in Tables 3, 4 and non-leaded alloys given in Table 2.

Exact conversion between material conditions designated R..., H... and G... is not possible.

Except when the suffix S is used, material condition is designated by only one of the above designations.

4.3 Product

The product designation provides a standardized pattern of designation from which a rapid and unequivocal description of a product can be conveyed in communication. It provides mutual comprehension at the international level with regard to products which meet the requirements of the relevant European Standard.

The product designation is no substitute for the full content of the document.

The product designation for products to this standard shall consist of:

— denomination (Wire);

— number of this European Standard (EN 12166);

— material designation, either symbol or number (see Tables 1 to 6);

Documents
Document Sharing Hub
Full document details: BS EN 12166:2024

— DW for compliance in the chemical composition according to the 4 MS Common Composition List. This information is mandatory in the case in which the product is used for drinking water applications according to the 4 MS Common Composition List and not to be given in other cases (see Bibliography [5]);

— material condition designation (see 4.2 and Tables 7 to 13);

— cross-sectional shape (the following designations shall be used as appropriate: RND for round, SQR for square, RCT for rectangular, HEX for hexagonal, OCT for octagonal, PFL for profile);

— nominal cross-sectional dimension(s) (or the number of the profile or a fully dimensioned and toleranced drawing);

— tolerance class for round, square or polygonal wire, (see Tables 14 and 15);

— for square, rectangular or polygonal wire, the corner shape (the following designations shall be used as appropriate: SH for sharp, RD for rounded), (see Table 17).

The derivation of a product designation is shown in the following examples.

EXAMPLE 1 Wire conforming to this document, in material designated either CuZn40Pb2 or CW617N, for standard applications in material condition H115, rectangular, nominal cross-sectional dimensions 6,0 mm × 5,0 mm, with sharp corners, will be designated as follows:

Wire EN 12166 — CuZn40Pb2 — H115 — RCT6,0 × 5,0 — SH

or

Wire EN 12166 — CW617N — H115 — RCT6,0 × 5,0 — SH

Denomination

Number of this European Standard

Material designation

Material condition designation

Cross-sectional shape and nominal dimensions in millimetres

Corner designation

EXAMPLE 2 Wire conforming to this document, in material designated either CuZn40Pb2 or CW617N, for drinking water applications according to the 4 MS Common Composition List, in material condition H115, rectangular, nominal cross-sectional dimensions 6,0 mm × 5,0 mm, with sharp corners, will be designated as follows:

Documents
Document Sharing Hub
Full document details: BS EN 12166:2024

Wire EN 12166 — CuZn40Pb2 — DW — H115 — RCT6,0 × 5,0 — SH

or

Wire EN 12166 — CW617N — DW — H115 — RCT6,0 × 5,0 — SH

Denomination

Number of this European Standard

Material designation

For the use in contact with drinking water according to 4 MS Common Composition List, (restriction in chemical composition)

Material condition designation

Cross-sectional shape and nominal dimensions in millimetres

Corner designation

EXAMPLE 3 Wire conforming to this document, in material designated either CuZn39Pb3 or CW614N, for standard applications in material condition R430, round, nominal diameter 6,0 mm, tolerance class B, will be designated as follows:

Wire EN 12166 **— CuZn39Pb3 — R430 — RND6,0B**

or

Wire EN 12166 — CW614**N — R430 — RND6,0B**

5 Ordering information

In order to facilitate the enquiry, order and confirmation of order procedures the following information shall be specified:

a) mass of product required;

b) denomination (Wire);

c) number of this European Standard (EN 12166);

d) material designation (see Tables 1 to 6);

e) material condition designation (see 4.2 and Tables 7 to 13) if other than M;

f) DW for compliance in the chemical composition according to the 4 MS Common Composition List. This information is mandatory in the case in which the product is used for drinking water applications according to the 4 MS Common Composition List and not to be given in other cases;

g) cross-sectional shape;

h) nominal cross-sectional dimension(s) (diameter or width across-flats);

i) for round, square and regular polygonal wire, the tolerance class required, unless the tolerance class shall be left to the discretion of the supplier (see Tables 14 and 15); for profiles, the tolerances required (or a drawing with dimensions and tolerances);

Documents
Document Sharing Hub

Full document details: BS EN 12166:2024

j) for square or rectangular wire, whether 'sharp' or 'rounded' corners are required, unless the corner radii shall be left to the discretion of the supplier (see Table 17);

It is recommended that the product designation, as described in 4.3, is used for items b) to j).

In addition, it shall also state on the enquiry and order any of the following, if required:

k) for profiles, if the shape is such that the position of the cross-section within the coil, reel, spool or drum is of importance to who make the order, this should be stated on the drawing (see Annex A for illustration);

l) for profiles, whether mechanical properties are required; if so, the method of test and the level of properties shall be agreed between the involved parties;

m) whether the products shall be supplied in a thermally stress relieved material condition;

n) whether special surface quality is required (see 6.6);

o) whether surface quality test is required (see 6.6) and the class;

p) whether a certificate of compliance is required (see 9.1);

q) whether an inspection document is required, and if so, which type (see 9.2);

r) whether there are any special requirements for marking, labelling or packaging including, if necessary, any limitation on dimensions or mass of coils, spools, reels or drums (see Clause 10).

EXAMPLE 1 Ordering details for 1 000 kg wire for general purposes conforming to EN 12166, in material designated either CuZn39Pb3 or CW614N, in material condition H115, rectangular, nominal cross-sectional dimensions 6,0 mm × 5,0 mm, with sharp corners, in 25 kg coils:

1 000 kg Wire EN 12166 **— CuZn39Pb3 — H115 — RCT 6,0 × 5,0 — SH**
— 25 kg coils

or

1 000 kg Wire EN 12166 **— CW614N — H115 — RCT 6,0 × 5,0 — SH**
— 25 kg coils

EXAMPLE 2 Ordering details for 5 000 kg wire for general purposes conforming to EN 12166, in material designated either CuZn40Pb2 or CW617N, for drinking water application according to the 4 MS Common Composition List, in material condition R430, round, nominal diameter 6,0 mm, tolerance class B, on 1 000 kg spools:

5 000 kg Wire EN 12166 **— CuZn40Pb2 — DW — R430 — RND6,0B**
— 1 000 kg spools

or

5 000 kg Wire EN 12166 **— CW617N — DW — R430 — RND6,0B**
— 1 000 kg spools

Documents
Document Sharing Hub
Full document details: BS EN 12166:2024

6 Requirements

6.1 Composition

The composition shall conform to the requirements for the appropriate material given in Tables 1 to 6.

Due to developing legislation, specific applications (see 4.3) may require restrictions in the chemical composition. In this case the limitations shall be specified in the ordering information [see Clause 5 list entry f)].

6.2 Mechanical properties

The tensile properties of R... material condition or the hardness properties of H... material condition shall conform to the appropriate requirements given in Tables 7 to 12. The tests shall be carried out in accordance with 8.2 or 8.3.

6.3 Grain size

The grain size of G... material condition shall conform to the appropriate ranges in Table 13. The tests shall be carried out in accordance with 8.4.

6.4 Dimensions and tolerances

6.4.1 Diameter or width across-flats

Diameter or width across-flats at any point shall conform to the tolerances given in Tables 14 to 16.

6.4.2 Shape tolerances

6.4.2.1 Round wire

The deviation from circular form (see 3.2) of round wire less than 3,0 mm diameter, shall not exceed half the range of the tolerance on diameter given in Table 14. The deviation from circular form of round wire equal to or greater than 3,0 mm diameter, shall not exceed the range of the tolerance on diameter given in Table 14.

6.4.2.2 Wire with square or regular cross-section (see above)

The width across-flats, measured at the centre of the faces at any one cross-section, shall not differ by more than half the range of the tolerance given for the size in Table 15.

6.4.3 Corner and edge geometry (wire with square and rectangular cross-section only)

The radii of the corners of wires shall conform to the requirements given in Table 17 for sharp or rounded corners.

For wires with the minimum width across-flats less than 3 mm the corners shall be calculated according to Figure 1. For wires with both widths across-flats equal to or greater than 3 mm, except in cases of dispute, the corners shall be measured directly, either by use of a gauge or an optical projector. In cases of dispute the method by optical projector shall be used.

Wire edges shall be smooth along the product length without discontinuity.

AVA Documents
Document Sharing Hub

Full document details: BS EN 12166:2024

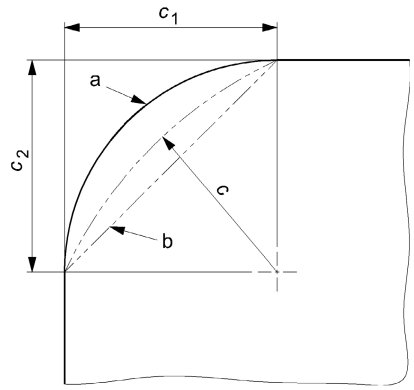

For sizes below 3 mm, the corner radius c is calculated from the formula:

$$c = \frac{c_1 + c_2}{2}$$

and may fall anywhere between fully circular 'a' and a chamfer 'b'.

Figure 1 — Calculation of corner radii

6.5 Joins

Welds made before the final drawing sequence are permissible. Joins made after the final drawing sequence are not permitted unless there has been agreement between the involved parties on the method of performing and marking these joins.

6.6 Surface quality

The surfaces shall be clean and smooth. The wires may have a superficial film of drawing lubricant or, if annealed or thermally stress relieved, a superficial, dull, iridescent oxide film, securely adherent on the surfaces.

Discontinuous irregularities on the surfaces of the wires are permitted if they are within the dimensional tolerances.

Since surface discontinuities (cracks, overlapping, scale, isolated pores, pits, grooves, etc.) cannot be completely avoided during manufacturing (hot and cold formation, heat treatments, handling and storage) and since they are retained when drawing, agreements shall be made regarding surface quality.

If eddy current test is requested, the test method given in EN 17263:2019 shall be applied using reference standard according to Table 19 for round wire. For polygonal wire the reference standard shall be agreed between the involved parties.

The sensitivity is to be set in such a way that the smallest signal of the borehole(s) just exceeds the response threshold (acceptance level).

Special requirements (e.g. pickling, degreasing, etc.) relating to the surface quality shall be agreed between the involved parties [see Clause 5, list entry n)].

6.7 Internal inclusion

Freedom of internal inclusions cannot be ensured in any copper alloys.

Documents
Document Sharing Hub
Full document details: BS EN 12166:2024

7 Sampling

7.1 General

When required or for use in cases of dispute, an inspection lot shall be sampled in accordance with 7.2 and 7.3.

7.2 Analysis

The sampling rate shall be in accordance with Table 18. A test sample, depending on the analytical technique to be employed, shall be prepared from each sampling unit and used for the determination of the composition.

When preparing the test sample, care should be taken to avoid contaminating or overheating the test sample. Carbide tipped tools are recommended; steel tools, if used, should be made of magnetic material to assist in the subsequent removal of extraneous iron. If the test samples are in finely divided form (e.g. drillings, millings), they should be treated carefully with a strong magnet to remove any particles of iron introduced during preparation.

In cases of dispute concerning the results of analysis, the full procedure given in ISO 1811-2 should be followed.

Results may be used from analyses carried out at an earlier stage of manufacturing the product, e.g. at the casting stage, if the material identity is maintained and if the manufacturer can assure the traceability of the product.

7.3 Tensile, hardness and grain size tests

The sampling rate shall be in accordance with Table 18. Sampling units shall be selected from the finished products. The test samples shall be cut from the sampling units. Test samples, and test pieces prepared from them, shall not be subjected to any further treatment other than any machining operations necessary in the preparation of the test pieces.

8 Test methods

8.1 Analysis

Analysis shall be carried out on the test pieces, or test portions, prepared from the test samples obtained in accordance with 7.2. Except in cases of dispute, the analytical methods used shall be at the discretion of the supplier. In cases of dispute, the methods of analysis to be used shall be agreed between the disputing parties. For expression of results, the rounding rules given in 8.6 shall be used.

8.2 Tensile test

The tensile test shall be performed on a coaxial test piece cut from a test sample obtained in accordance with 7.3. The test shall be carried out in accordance with the method given in EN ISO 6892-1:2019. For expression of results, the rounding rules given in 8.6 shall be used.

For other than round wire, the tensile test results shall be calculated using nominal cross-sectional areas.

Documents
Document Sharing Hub

Full document details: BS EN 12166:2024