BS EN 12168:2024

BSI Standards Publication

Copper and copper alloys — Hollow rod for free machining purposes

Documents
Document Sharing Hub

Full document details: BS EN 12168:2024

National foreword

This British Standard is the UK implementation of EN 12168:2024. It supersedes BS EN 12168:2016, which is withdrawn.

The UK participation in its preparation was entrusted to Technical Committee NFE/34, Copper and copper alloys.

A list of organizations represented on this committee can be obtained on request to its committee manager.

Contractual and legal considerations

This publication has been prepared in good faith, however no representation, warranty, assurance or undertaking (express or implied) is or will be made, and no responsibility or liability is or will be accepted by BSI in relation to the adequacy, accuracy, completeness or reasonableness of this publication. All and any such responsibility and liability is expressly disclaimed to the full extent permitted by the law.

This publication is provided as is, and is to be used at the recipient's own risk.

The recipient is advised to consider seeking professional guidance with respect to its use of this publication.

This publication is not intended to constitute a contract. Users are responsible for its correct application.

This publication has been prepared under a mandate given to the European Standards Organizations by the European Commission and the European Free Trade Association. It is intended to support requirements of the EU legislation detailed in the European Foreword. A European Annex, usually Annex ZA or ZZ, describes how this publication relates to that EU legislation.

For the Great Britain market (England, Scotland and Wales), if UK Government has designated this publication for conformity with UKCA marking (or similar) legislation, it may contain an additional National Annex. Where such a National Annex exists, it shows the correlation between this publication and the relevant UK legislation. If there is no National Annex of this kind, the relevant Annex ZA or ZZ in the body of the European text will indicate the relationship to UK regulation applicable in Great Britain. References to EU legislation may need to be read in accordance with the UK designation and the applicable UK law. Further information on designated standards can be found at www.bsigroup.com/standardsandregulation.

For the Northern Ireland market, UK law will continue to implement relevant EU law subject to periodic confirmation. Therefore Annex ZA/ZZ in the European text, and references to EU legislation, are still valid for this market.

UK Government is responsible for legislation. For information on legislation and policies relating to that legislation, consult the relevant pages of www.gov.uk.

© The British Standards Institution 2024
Published by BSI Standards Limited 2024

ISBN 978 0 539 20214 4

AVA Documents
Document Sharing Hub

Full document details: BS EN 12168:2024

ICS 77.150.30

Compliance with a British Standard cannot confer immunity from legal obligations.

This British Standard was published under the authority of the Standards Policy and Strategy Committee on 31 October 2024.

Amendments/corrigenda issued since publication

Date	Text affected

Documents
Document Sharing Hub

Documents
Document Sharing Hub

EUROPEAN STANDARD

NORME EUROPÉENNE

EUROPÄISCHE NORM

EN 12168

October 2024

ICS 77.150.30

Supersedes EN 12168:2016

English Version

Copper and copper alloys - Hollow rod for free machining purposes

Cuivre et alliages de cuivre - Barres creuses pour décolletage

Kupfer und Kupferlegierungen - Hohlstangen für die spanende Bearbeitung

This European Standard was approved by CEN on 30 June 2024.

CEN members are bound to comply with the CEN/CENELEC Internal Regulations which stipulate the conditions for giving this European Standard the status of a national standard without any alteration. Up-to-date lists and bibliographical references concerning such national standards may be obtained on application to the CEN-CENELEC Management Centre or to any CEN member.

This European Standard exists in three official versions (English, French, German). A version in any other language made by translation under the responsibility of a CEN member into its own language and notified to the CEN-CENELEC Management Centre has the same status as the official versions.

CEN members are the national standards bodies of Austria, Belgium, Bulgaria, Croatia, Cyprus, Czech Republic, Denmark, Estonia, Finland, France, Germany, Greece, Hungary, Iceland, Ireland, Italy, Latvia, Lithuania, Luxembourg, Malta, Netherlands, Norway, Poland, Portugal, Republic of North Macedonia, Romania, Serbia, Slovakia, Slovenia, Spain, Sweden, Switzerland, Türkiye and United Kingdom.

EUROPEAN COMMITTEE FOR STANDARDIZATION
COMITÉ EUROPÉEN DE NORMALISATION
EUROPÄISCHES KOMITEE FÜR NORMUNG

CEN-CENELEC Management Centre: Rue de la Science 23, B-1040 Brussels

© 2024 CEN All rights of exploitation in any form and by any means reserved worldwide for CEN national Members.

Ref. No. EN 12168:2024 E

Documents
Document Sharing Hub

Full document details: BS EN 12168:2024

Contents

Page

European foreword 4
Introduction 6
1 Scope 7
2 Normative references 7
3 Terms and definitions 7
4 Designations 9
4.1 Material 9
4.1.1 General 9
4.1.2 Symbol 9
4.1.3 Number 9
4.2 Material condition 9
4.3 Product 9
5 Ordering information 12
6 Requirements 14
6.1 Composition 14
6.2 Mechanical properties 14
6.3 Resistance to dezincification 14
6.4 Residual stress level 14
6.5 Dimensions and tolerances 14
6.5.1 Diameter or width across-flats 14
6.5.2 Tolerance on wall thickness 14
6.5.3 Eccentricity 15
6.5.4 Shape tolerances 15
6.5.5 Straightness 15
6.5.6 Length 15
6.5.7 Corner radii 15
6.5.8 Twist of polygonal hollow rod 16
6.6 Surface quality 16
6.7 Internal inclusion 17
7 Sampling 17
7.1 General 17
7.2 Analysis 17
7.3 Mechanical tests 17
7.4 Dezincification resistance and stress corrosion resistance tests 17
8 Test methods 18
8.1 Analysis 18
8.2 Tensile test 18
8.2.1 General 18
8.2.2 Location of test pieces 18
8.2.3 Shape and size of test pieces 18
8.2.4 Procedure for testing 18
8.2.5 Determination of results 18

Documents
Document Sharing Hub
Full document details: BS EN 12168:2024

8.3 Hardness test 18
8.4 Dezincification resistance test 19
8.5 Stress corrosion resistance test 19
8.6 Retests 19
8.6.1 Analysis, tensile, hardness and dezincification resistance tests 19
8.6.2 Stress corrosion resistance test 19
8.7 Rounding of results 19

9 Certificate of Compliance and inspection documentation 20
9.1 Certificate of Compliance 20
9.2 Inspection documentation 20

10 Marking, packaging, labelling 20

Annex ZA (informative) Relationship between this European Standard and the essential requirements of Directive 2014/68/EU (Pressure equipment Directive) aimed to be covered 39

Bibliography 40

Documents
Document Sharing Hub
Full document details: BS EN 12168:2024

European foreword

This document (EN 12168:2024) has been prepared by Technical Committee CEN/TC 133 “Copper and copper alloys”, the secretariat of which is held by DIN.

This European Standard shall be given the status of a national standard, either by publication of an identical text or by endorsement, at the latest by April 2025, and conflicting national standards shall be withdrawn at the latest by April 2025.

Attention is drawn to the possibility that some of the elements of this document may be the subject of patent rights. CEN shall not be held responsible for identifying any or all such patent rights.

This document supersedes EN 12168:2016.

In comparison with EN 12168:2016, the following significant technical changes were made:

a) Modification of the note in Clause 1;

b) Introduction of eddy current test parameters in 6.6;

c) Introduction of 6.7 Internal inclusion;

d) Modification of the definition of diameter or width across-flats in 6.5.4.1;

e) Addition of a new Figure for straightness at 6.5.5 and modification of values in Table 13;

f) Introduction in the chemical composition Tables of a footnote to explain the meaning of elements for which no upper and lower limits are specified;

g) Deletion of alloys groups in Table 3;

h) Modification of the chemical composition of CuZn39Pb3 (CW614N), CuZn40Pb2 (CW617N), CuZn35Pb1,5AlAs (CW625N) and CuZn33Pb1,5AlAs (CW626N) in Table 3;

i) Addition of a new alloy CuZn40Pb1 (CW627N) in Table 3 and Table 7;

j) Modification of the chemical composition of CuZn33Pb1AlSiAs (CW725R) in Table 4;

k) Addition of a new alloy CuZn36Si1P (CW726R) in Table 4 and Table 8;

l) Modification of the range of dimensions in Table 9 and in Table 11;

m) Addition of Table 18 and Table 19;

n) Addition of Annex ZA.

This document is one of a series of European Standards for the copper and copper alloy products rod, wire, profile and forgings. Other products are specified as follows:

— EN 12163, *Copper and copper alloys — Rod for general purposes*;

— EN 12164, *Copper and copper alloys — Rod for free machining purposes*;

— EN 12165, *Copper and copper alloys — Wrought and unwrought forging stock*;

Documents
Document Sharing Hub
Full document details: BS EN 12168:2024

— EN 12166, *Copper and copper alloys — Wire for general purposes*;

— EN 12167, *Copper and copper alloys — Profiles and bars for general purposes*;

— EN 13601, *Copper and copper alloys — Copper rod, bar and wire for general electrical purposes*;

— EN 13602, *Copper and copper alloys — Drawn, round copper wire for the manufacture of electrical conductors*;

— EN 13605, *Copper and copper alloys — Copper profiles and profiled wire for electrical purposes*.

This document has been prepared under a standardization request addressed to CEN by the European Commission. The Standing Committee of the EFTA States subsequently approves these requests for its Member States.

For the relationship with EU Legislation, see informative Annex ZA, which is an integral part of this document.

Any feedback and questions on this document should be directed to the users' national standards body. A complete listing of these bodies can be found on the CEN website.

According to the CEN-CENELEC Internal Regulations, the national standards organisations of the following countries are bound to implement this European Standard: Austria, Belgium, Bulgaria, Croatia, Cyprus, Czech Republic, Denmark, Estonia, Finland, France, Germany, Greece, Hungary, Iceland, Ireland, Italy, Latvia, Lithuania, Luxembourg, Malta, Netherlands, Norway, Poland, Portugal, Republic of North Macedonia, Romania, Serbia, Slovakia, Slovenia, Spain, Sweden, Switzerland, Türkiye and the United Kingdom.

Documents
Document Sharing Hub
Full document details: BS EN 12168:2024

Introduction

The European Committee for Standardization (CEN) draws attention to the fact that it is claimed that compliance with this document may involve the use of a patent concerning the alloy CuZn36Si1P (CW726R) given in 6.1.

CEN takes no position concerning the evidence, validity and scope of this patent right.

The holder of this patent right has ensured the CEN that he is willing to negotiate licenses under reasonable and non-discriminatory terms and conditions with applicants throughout the world. In this respect, the statement of the holder of this patent right is registered with CEN.

— For CuZn36Si1P (CW726R) information may be obtained from:

Luvata Oy
Kuparitie 5
28330 Pori
FINLAND

Attention is drawn to the possibility that some of the elements of this document may be the subject of patent rights other than those identified above. CEN shall not be held responsible for identifying any or all such patent rights.

CEN and CENELEC maintain online lists of patents relevant to their standards. Users are encouraged to consult the lists for the most up to date information concerning patents (https://www.cencenelec.eu/european-standardization/ipr-and-patents/patents/).

Due to developing legislation, the composition of a material may be restricted to the composition specified in this European Standard with respect to individual uses (e.g. for the use in contact with drinking water in some Member States of the European Union). These individual restrictions are not part of this European Standard. Nevertheless, for materials for which traditional and major uses are affected, these restrictions are indicated. The absence of an indication, however, does not imply that the material can be used in any application without any legal restriction.

Documents
Document Sharing Hub
Full document details: BS EN 12168:2024

1 Scope

This document specifies the composition, property requirements and dimensional tolerances for copper alloy hollow rod, finally produced by drawing or extruding, specifically intended for free machining purposes.

NOTE Hollow products having an outside diameter greater than 80 mm and/or a wall thickness less than 2 mm are most frequently specified in EN 12449.

The sampling procedures, the methods of test for verification of conformity to the requirements of this document, are also specified.

2 Normative references

The following documents are referred to in the text in such a way that some or all of their content constitutes requirements of this document. For dated references, only the edition cited applies. For undated references, the latest edition of the referenced document (including any amendments) applies.

EN 764-5:2014, *Pressure equipment — Part 5: Inspection documentation of metallic materials and compliance with the material specification*

EN 10204:2004, *Metallic products — Types of inspection documents*

EN 14977:2006, *Copper and copper alloys — Detection of tensile stress — 5 % ammonia test*

EN 17263:2019, *Copper and copper alloys — Eddy current testing on the outer surface of rods, bars, hollow rods and wires for the detection of defects by encircling test coil*

EN ISO 6506-1:2014, *Metallic materials — Brinell hardness test — Part 1: Test method (ISO 6506-1:2014)*

EN ISO 6507-1:2018, *Metallic materials — Vickers hardness test — Part 1: Test method (ISO 6507-1:2018)*

EN ISO 6509-1:2014, *Corrosion of metals and alloys — Determination of dezincification resistance of copper alloys with zinc — Part 1: Test method (ISO 6509-1:2014)*

EN ISO 6892-1:2019, *Metallic materials — Tensile testing — Part 1: Method of test at room temperature (ISO 6892-1:2019)*

ISO 6957:1988, *Copper alloys — Ammonia test for stress corrosion resistance*

3 Terms and definitions

For the purposes of this document, the following terms and definitions apply.

ISO and IEC maintain terminology databases for use in standardization at the following addresses:

— IEC Electropedia: available at https://www.electropedia.org/

— ISO Online browsing platform: available at https://www.iso.org/obp

Documents
Document Sharing Hub
Full document details: BS EN 12168:2024

3.1
hollow rod
straight product, of uniform cross-section along its whole length with an enclosed void for which the longitudinal axes of its external contour and its internal contour, which is the boundary with the enclosed void, are coincidental

Note 1 to entry: The external and internal contours of the rod, at any cross-section, can be that of a circle, square, rectangle, hexagon, or octagon, or with slight modification of those basic shapes by inclusion of detail(s) of relatively small size to the remainder of the cross-section. Examples of hollow rod cross-sections are shown in Figure 1.

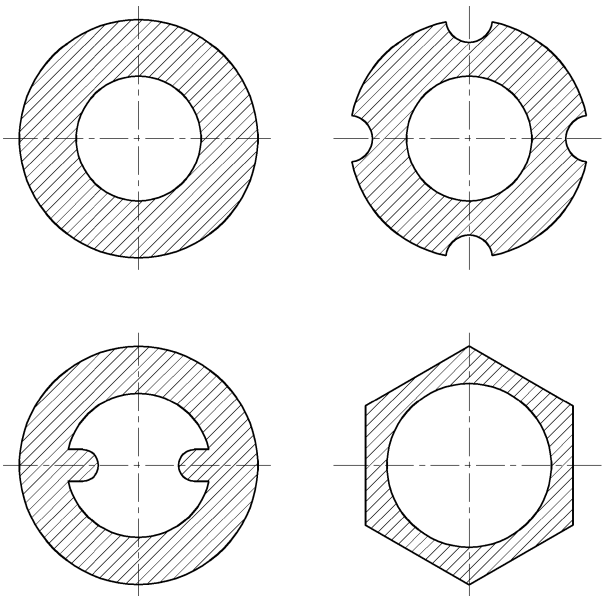

Figure 1 — Examples of hollow rod cross-sections

3.2
deviation from circular form
difference between the maximum and the minimum outside diameters measured at any one cross-section of the product

3.3
eccentricity
difference between the maximum and the minimum wall thickness, measured in the same cross-section perpendicular to the axis of the hollow rod, expressed as a percentage of the sum of the maximum and minimum wall thicknesses ($s_{max.}$ and $s_{min.}$):

$$e = \frac{s_{max.} - s_{min.}}{s_{max.} + s_{min.}} \times 100$$

Note 1 to entry: For polygons, wall thickness is measured perpendicular to the mid-points of the flat outside surfaces.

Documents
Document Sharing Hub
Full document details: BS EN 12168:2024

4 Designations

4.1 Material

4.1.1 General

The material is designated either by symbol or by number (see Tables 1 to 4).

4.1.2 Symbol

The material symbol designation is based on the designation system given in ISO 1190-1:1982.

NOTE Although material symbol designations used in this standard might be the same as those in other standards using the designation system given in ISO 1190-1:1982, the detailed composition requirements are not necessarily the same.

4.1.3 Number

The material number designation is in accordance with the system given in EN 1412:2016.

4.2 Material condition

For the purposes of this document, the following designations, which are in accordance with the system given in EN 1173:2008, apply for the material condition:

M	material condition for the product as manufactured without specified mechanical properties;
R...	material condition designated by the minimum value of tensile strength requirement for the product with mandatory tensile property requirements;
H...	material condition designated by the minimum value of hardness requirement for the product with mandatory hardness requirements;
S (suffix)	material condition for a product which is stress relieved.

Products in the M or H... material condition may be specially processed (i.e. mechanically or thermally stress relieved) in order to lower the residual stress level to improve the resistance to stress corrosion and the dimensional stability on machining [see Clause 5 list entry l), list entry m) and 8.5].

Exact conversion between material conditions designated R... and H... is not possible.

Except when the suffix S is used, material condition is designated by only one of the above designations.

4.3 Product

The product designation provides a standardized pattern of designation from which a rapid and unequivocal description of a product can be conveyed in communication. It provides mutual comprehension at the international level with regard to products which meet the requirements of the relevant document.

The product designation is no substitute for the full content of the document.

The product designation for products to this document shall consist of:

a) denomination (hollow rod);

b) number of this European Standard (EN 12168);

c) material designation, either symbol or number (see Tables 1 to 4);

Documents
Document Sharing Hub
Full document details: BS EN 12168:2024

d) DW for compliance in the chemical composition according to the 4 MS Common Composition List. This information is mandatory in the case in which the product is used for drinking water applications according to the 4 MS Common Composition List and not to be given in other cases (see Bibliography [11]);

e) material condition designation (see Tables 5 to 8);

f) external and/or internal cross-sectional shape (the following designations shall be used as appropriate: RND for round, SQR for square, RCT for rectangular, HEX for hexagonal, OCT for octagonal, PFL for profile);

g) nominal cross-sectional dimensions (see Clause 5, list entry g)) or, for profiles, the number of the profile or a fully dimensioned and toleranced drawing, and:

   1) tolerance class A, B or C added to the external dimension (see Table 9); and/or

   2) tolerance class A or B added to the bore diameter (see Table 11);

h) wall thickness (the following designation shall be used for wall thickness: WT) (see Table 10);

i) for square, hexagonal or octagonal external shape, the corner shape (the following designations shall be used as appropriate: SH for sharp, RD for rounded) (see Table 15).

A typical product designation is shown in the following examples.

EXAMPLE 1 Hollow rod for free machining purposes conforming to this document, in material designated either CuZn40Pb2 or CW617N, for standard applications, in material condition H090, round external shape and bore, nominal outside diameter 40 mm, tolerance Class B, and nominal wall thickness 10 mm will be designated as follows:

Hollow rod EN 12168 — CuZn40Pb2 — H090 — RND40B × WT10

or

Hollow rod EN 12168 — CW617N — H090 — RND40B × WT10

Denomination

Number of European Standard

Material designation

Material condition designation

Cross-sectional shape, nominal cross-sectional dimensions in millimetres, tolerance class, nominal wall thickness

EXAMPLE 2 Hollow rod for free machining purposes conforming to this document, in material designated either CuZn40Pb2 or CW617N, for drinking water applications according to the 4 MS Common Composition List, in material condition H090, round external shape and bore, nominal outside diameter 40 mm, tolerance Class B, and nominal wall thickness 10 mm will be designated as follows:

Documents
Document Sharing Hub
Full document details: BS EN 12168:2024