BS EN 12255-12:2024

BSI Standards Publication

Wastewater treatment plants

Part 12: Control and automation

Documents
Document Sharing Hub

Full document details: BS EN 12255-12:2024

National foreword

This British Standard is the UK implementation of EN 12255-12:2024. It supersedes BS EN 12255-12:2003, which is withdrawn.

The UK participation in its preparation was entrusted to Technical Committee B/505/40, Wastewater Treatment Plants > 50 PT.

A list of organizations represented on this committee can be obtained on request to its committee manager.

Contractual and legal considerations

This publication has been prepared in good faith, however no representation, warranty, assurance or undertaking (express or implied) is or will be made, and no responsibility or liability is or will be accepted by BSI in relation to the adequacy, accuracy, completeness or reasonableness of this publication. All and any such responsibility and liability is expressly disclaimed to the full extent permitted by the law.

This publication is provided as is, and is to be used at the recipient's own risk.

The recipient is advised to consider seeking professional guidance with respect to its use of this publication.

This publication is not intended to constitute a contract. Users are responsible for its correct application.

© The British Standards Institution 2024
Published by BSI Standards Limited 2024

ISBN 978 0 539 17529 5

ICS 13.060.30

Compliance with a British Standard cannot confer immunity from legal obligations.

This British Standard was published under the authority of the Standards Policy and Strategy Committee on 31 March 2024.

Amendments/corrigenda issued since publication

Date	Text affected

AVA Documents
Document Sharing Hub

Full document details: BS EN 12255-12:2024

EUROPEAN STANDARD

NORME EUROPÉENNE

EUROPÄISCHE NORM

EN 12255-12

March 2024

ICS 13.060.30

Supersedes EN 12255-12:2003

English Version

Wastewater treatment plants - Part 12: Control and automation

Stations d'épuration - Partie 12 : Régulation et automatisation

Kläranlagen - Teil 12: Steuerung und Automatisierung

This European Standard was approved by CEN on 29 January 2024.

CEN members are bound to comply with the CEN/CENELEC Internal Regulations which stipulate the conditions for giving this European Standard the status of a national standard without any alteration. Up-to-date lists and bibliographical references concerning such national standards may be obtained on application to the CEN-CENELEC Management Centre or to any CEN member.

This European Standard exists in three official versions (English, French, German). A version in any other language made by translation under the responsibility of a CEN member into its own language and notified to the CEN-CENELEC Management Centre has the same status as the official versions.

CEN members are the national standards bodies of Austria, Belgium, Bulgaria, Croatia, Cyprus, Czech Republic, Denmark, Estonia, Finland, France, Germany, Greece, Hungary, Iceland, Ireland, Italy, Latvia, Lithuania, Luxembourg, Malta, Netherlands, Norway, Poland, Portugal, Republic of North Macedonia, Romania, Serbia, Slovakia, Slovenia, Spain, Sweden, Switzerland, Türkiye and United Kingdom.

EUROPEAN COMMITTEE FOR STANDARDIZATION
COMITÉ EUROPÉEN DE NORMALISATION
EUROPÄISCHES KOMITEE FÜR NORMUNG

CEN-CENELEC Management Centre: Rue de la Science 23, B-1040 Brussels

© 2024 CEN All rights of exploitation in any form and by any means reserved worldwide for CEN national Members.

Ref. No. EN 12255-12:2024 E

Documents
Document Sharing Hub

Full document details: BS EN 12255-12:2024

Contents

Page

European foreword 3
Introduction 5
1 Scope 6
2 Normative references 6
3 Terms and definitions 6
4 Symbols and abbreviations 7
5 Instrumentation and control requirements 8
5.1 General requirements 8
5.2 Instruments 8
5.3 Instrumentation systems 8
5.4 Process control and automation 10
6 Design and implementation 11
6.1 Initial design 11
6.2 Detailed design 11
6.3 Commissioning, test and take over 12
Annex A (informative) Guidance for the selection of instrumentation, control and automation systems 13
A.1 General 13
A.2 Instrumentation life cycle 14
A.2.1 Overview 14
A.2.2 Stage 1 - Instrumentation purpose 14
A.2.3 Stage 2 - Instrumentation specification 14
A.2.4 Stage 3 - Installation 15
A.2.5 Stage 4 - Operation and maintenance 15
A.2.6 Stage 5 - Review and replacement 16
A.3 Examples of basic instrumentation and control systems 16
A.3.1 General 16
A.3.2 Simple relay-based control systems 16
A.3.3 Programmable logic controller (PLC) based instrumentation and control systems 17
A.3.4 Advanced process control 18
A.4 The level of instrumentation, control and automation in wastewater systems 19
A.4.1 Overview 19
A.4.2 Determination of appropriate instrument and control systems for trickling reactor plants 19
A.4.3 Determination of appropriate instrument and control systems for activated sludge plants 21
Bibliography 26

Documents
Document Sharing Hub
Full document details: BS EN 12255-12:2024

European foreword

This document (EN 12255-12:2024) has been prepared by Technical Committee CEN/TC 165 "Waste water engineering", the secretariat of which is held by DIN.

This European Standard shall be given the status of a national standard, either by publication of an identical text or by endorsement, at the latest by September 2024, and conflicting national standards shall be withdrawn at the latest by September 2024.

Attention is drawn to the possibility that some of the elements of this document may be the subject of patent rights. CEN shall not be held responsible for identifying any or all such patent rights.

This document supersedes EN 12255-12:2003.

EN 12255-12:2024 includes the following significant technical changes with respect to EN 12255-12:2003:

a) comprehensive revision and addition in all sections;

b) adaption to the state of the art;

c) updating of the normative references.

This is the twelfth part prepared by Working Group CEN/TC 165/WG 40 relating to the general requirements and processes for treatment plants for a total number of inhabitants and population equivalents (PT) over 50.

The EN 12255 series with the generic title "*Wastewater treatment plants*" consists of the following parts:

- *Part 1: General construction principles*
- *Part 2: Storm water management systems*
- *Part 3: Preliminary treatment*
- *Part 4: Primary settlement*
- *Part 5: Lagooning processes*
- *Part 6: Activated sludge process*
- *Part 7: Biological fixed-film reactors*
- *Part 8: Sludge treatment and storage*
- *Part 9: Odour control and ventilation*
- *Part 10: Safety principles*
- *Part 11: General data required*
- *Part 12: Control and automation*
- *Part 13: Chemical treatment — Treatment of wastewater by precipitation/flocculation*

AVA Documents
Document Sharing Hub

Full document details: BS EN 12255-12:2024

- *Part 14: Disinfection*
- *Part 15: Measurement of the oxygen transfer in clean water in aeration tanks of activated sludge plants*
- *Part 16: Physical (mechanical) filtration*

NOTE Part 2 is under preparation.

Any feedback and questions on this document should be directed to the users' national standards body. A complete listing of these bodies can be found on the CEN website.

According to the CEN-CENELEC Internal Regulations, the national standards organisations of the following countries are bound to implement this European Standard: Austria, Belgium, Bulgaria, Croatia, Cyprus, Czech Republic, Denmark, Estonia, Finland, France, Germany, Greece, Hungary, Iceland, Ireland, Italy, Latvia, Lithuania, Luxembourg, Malta, Netherlands, Norway, Poland, Portugal, Republic of North Macedonia, Romania, Serbia, Slovakia, Slovenia, Spain, Sweden, Switzerland, Türkiye and the United Kingdom.

Documents
Document Sharing Hub
Full document details: BS EN 12255-12:2024

Introduction

Differences in wastewater treatment throughout Europe have led to a variety of systems being developed. This document gives fundamental information about the systems; this document has not attempted to specify all available systems. A generic arrangement of wastewater treatment plants is illustrated in Figure 1:

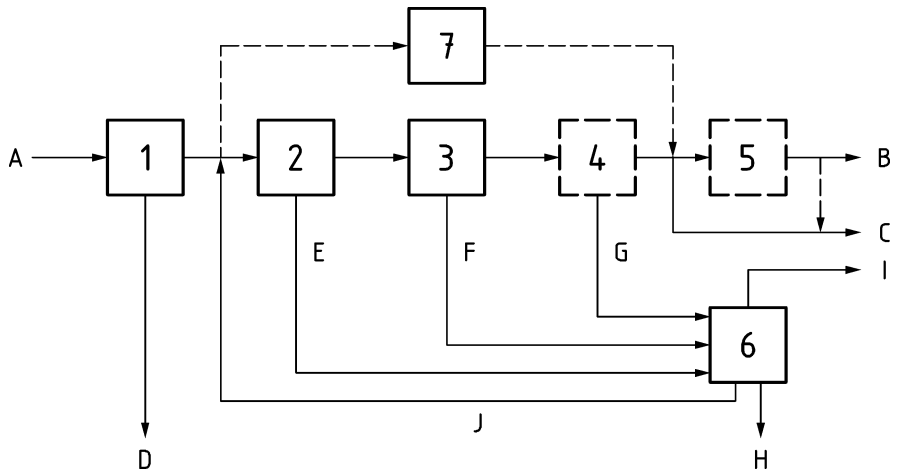

Key

1	preliminary treatment	C	discharged effluent
2	primary treatment	D	screenings and grit
3	secondary treatment	E	primary sludge
4	tertiary treatment	F	secondary sludge
5	additional treatment (e.g. disinfection or removal of micropollutants)	G	tertiary sludge
6	sludge treatment	H	digested sludge
7	lagoons (as an alternative)	I	digester gas
A	raw wastewater	J	returned water from dewatering
B	effluent for re-use (e.g. irrigation)		

Figure 1 — Schematic diagram of wastewater treatment plants

Detailed information additional to that contained in this document may be obtained by referring to the bibliography.

The primary application is for wastewater treatment plants designed for the treatment of domestic and municipal wastewater.

NOTE For requirements on pumping installations at wastewater treatment plants, see EN 752, *Drain and sewer systems outside buildings — Sewer system management*, and EN 16932, *Drain and sewer systems outside buildings — Pumping systems*:

— *Part 1: General requirements*;

— *Part 2: Positive pressure systems*;

— *Part 3: Vacuum systems*.

Documents
Document Sharing Hub
Full document details: BS EN 12255-12:2024

1 Scope

This document specifies general requirements for instrumentation and specific requirements for process control and automation systems on wastewater treatment plants for more than 50 PT.

NOTE 1 Because of the rapid rate of development of sensor and control equipment, this document is intended as an overview and uses examples and general requirements, not detailed equipment specifications. Detailed information additional to that contained in this document can be obtained by referring to the Bibliography.

NOTE 2 Although EC directives become matters of law in member states of the EU and some other situations, this standard is intended for wider use and hence those directives with clear technical guidance of a type that would generally be appropriate in a standard are referenced in the text and listed in the Bibliography. The alternative of listing requirements copied from directives would potentially create unacceptable conflict when directives are revised.

2 Normative references

The following documents are referred to in the text in such a way that some or all of their content constitutes requirements of this document. For dated references, only the edition cited applies. For undated references, the latest edition of the referenced document (including any amendments) applies.

EN 16323:2014, *Glossary of wastewater engineering terms*

EN 62305-3, *Protection against lightning — Part 3: Physical damage to structures and life hazard (IEC 62305-3)*

IEC 60364, *Low voltage electrical installations*

3 Terms and definitions

For the purposes of this document, the terms and definitions given in EN 16323:2014 and the following apply.

ISO and IEC maintain terminology databases for use in standardization at the following addresses:

- ISO Online browsing platform: available at https://www.iso.org/obp
- IEC Electropedia: available at https://www.electropedia.org/

3.1
instrumentation
electronic or mechanical devices that are used to either sense or monitor process variables

Note 1 to entry: These can be split into sensors and monitors.

3.1.1
sensor
electrical or mechanical device that communicates the qualitative state of a process variable

Note 1 to entry: Examples of this include a contact probe or switch that outputs a 0 or 1 as an off/on state and devices which transmit an electrical signal (usually a voltage) that is scalable to a process variable.

3.1.2
monitor
electrical or mechanical device that communicates the quantitative state of a process variable

Note 1 to entry: Examples of this include a contact probe and devices which transmit an electrical signal (usually a current) that is scalable to a process variable.

Documents
Document Sharing Hub
Full document details: BS EN 12255-12:2024

3.1.3
measurement system
combination of a sensor and a monitor that together communicates the quantitative state of a process variable

3.2
process control and automation
control device (such as a PLC, controller or relay) that takes inputs from the instrumentation system to automatically change the state of the system to a specified set of control variables

Note 1 to entry: This can be a one-way system or if the control is a circular control this would be called closed-loop control.

3.2.1
process variable
PV
quantity, quality, or condition of a process media or process object which value may be subject to change and can usually be measured

[SOURCE: ISO 15519-2:2015, 3.1.8]

3.2.2
set point
SP
setting within the control system that is the target setting for the control system to change the process variable

3.2.3
controller
device for regulation or management of a system or component

[SOURCE: ISO 16484-5:2022, 3.2.21]

3.2.4
telemetry system
communications system that receives data from instrumentation and control systems and transmits the readings to a remote data visualisation and storage system

3.2.5
SCADA system
supervisory control and data acquisition system
combination of hardware and software used to send commands and acquire data for the purpose of monitoring and control

Note 1 to entry: This is normally physically located on site.

4 Symbols and abbreviations

ASM	activated sludge models
ATEX	atmospheres explosible and regulation concerning potentially explosive atmospheres
HART	highway addressable remote transducer (protocol)
PT	total population
PLC	programmable logic controller

AVA Documents
Document Sharing Hub

Full document details: BS EN 12255-12:2024