BS EN 12259-9:2019

BSI Standards Publication

Fixed firefighting systems - Components for sprinkler and water spray systems

Part 9: Deluge alarm valves

Documents
Document Sharing Hub

Full document details: BS EN 12259-9:2019

National foreword

This British Standard is the UK implementation of EN 12259-9:2019.

The UK participation in its preparation was entrusted to Technical Committee FSH/18/2, Sprinkler Systems.

A list of organizations represented on this committee can be obtained on request to its secretary.

This publication does not purport to include all the necessary provisions of a contract. Users are responsible for its correct application.

© The British Standards Institution 2019
Published by BSI Standards Limited 2019

ISBN 978 0 580 90130 0

ICS 13.220.20

Compliance with a British Standard cannot confer immunity from legal obligations.

This British Standard was published under the authority of the Standards Policy and Strategy Committee on 30 April 2019.

Amendments/corrigenda issued since publication

Date	Text affected

Documents
Document Sharing Hub

Full document details: BS EN 12259-9:2019

EUROPEAN STANDARD

NORME EUROPÉENNE

EUROPÄISCHE NORM

EN 12259-9

April 2019

ICS 13.220.20

English Version

Fixed firefighting systems - Components for sprinkler and water spray systems - Part 9: Deluge alarm valves

Installations fixes de lutte contre l'incendie - Organes constitutifs des systèmes sprinkleurs et à pulvérisation d'eau - Partie 9 : Systèmes de soupape d'alarme déluge

Ortsfeste Brandbekämpfungsanlagen - Bauteile für Sprinkler- und Sprühwasseranlagen - Teil 9: Sprühwasserventile und Zubehör

This European Standard was approved by CEN on 1 March 2019.

CEN members are bound to comply with the CEN/CENELEC Internal Regulations which stipulate the conditions for giving this European Standard the status of a national standard without any alteration. Up-to-date lists and bibliographical references concerning such national standards may be obtained on application to the CEN-CENELEC Management Centre or to any CEN member.

This European Standard exists in three official versions (English, French, German). A version in any other language made by translation under the responsibility of a CEN member into its own language and notified to the CEN-CENELEC Management Centre has the same status as the official versions.

CEN members are the national standards bodies of Austria, Belgium, Bulgaria, Croatia, Cyprus, Czech Republic, Denmark, Estonia, Finland, Former Yugoslav Republic of Macedonia, France, Germany, Greece, Hungary, Iceland, Ireland, Italy, Latvia, Lithuania, Luxembourg, Malta, Netherlands, Norway, Poland, Portugal, Romania, Serbia, Slovakia, Slovenia, Spain, Sweden, Switzerland, Turkey and United Kingdom.

EUROPEAN COMMITTEE FOR STANDARDIZATION
COMITÉ EUROPÉEN DE NORMALISATION
EUROPÄISCHES KOMITEE FÜR NORMUNG

CEN-CENELEC Management Centre: Rue de la Science 23, B-1040 Brussels

© 2019 CEN All rights of exploitation in any form and by any means reserved worldwide for CEN national Members.

Ref. No. EN 12259-9:2019 E

Documents
Document Sharing Hub

Full document details: BS EN 12259-9:2019

Contents

Page

European foreword ... 4
1 Scope ... 5
2 Normative references ... 5
3 Terms and definitions ... 5
4 Product characteristics ... 8
4.1 Operational reliability ... 8
4.1.1 Working pressure ... 8
4.1.2 Range of operation ... 8
4.1.3 Pressure loss due to hydraulic friction loss ... 10
4.1.4 Operational reliability of moving parts ... 10
4.1.5 Avoidance of error in cover plate installation ... 14
4.1.6 Provision of access to sealing assembly for maintenance ... 14
4.1.7 Provision of manual drain connection ... 14
4.1.8 Provision of automatic drain to prevent water columns ... 15
4.2 Durability ... 15
4.2.1 Endurance ... 15
4.2.2 Resistance to ageing of non-metallic components (excluding gaskets, diaphragms and seals) ... 15
4.2.3 Resistance of springs and diaphragms to cyclic operations ... 15
4.2.4 Resistance to deterioration of body, fasteners and covers ... 15
4.2.5 Resistance to deterioration for seating and bearing surfaces ... 16
4.2.6 Resistance to adhesion for sealing assembly and diaphragm elements ... 16
4.3 Additional requirements ... 16
4.3.1 Nominal size ... 16
4.3.2 Connections ... 16
5 Testing, assessment and sampling methods ... 17
6 Assessment and verification of constancy of performance - AVCP ... 17
6.1 General ... 17
6.2 Type testing ... 17
6.2.1 General ... 17
6.2.2 Test samples, testing and compliance criteria ... 18
6.2.3 Test reports ... 20
6.2.4 Shared other party results ... 20
6.3 Factory production control (FPC) ... 20
6.3.1 General ... 20
6.3.2 Requirements ... 21
6.3.3 Product specific requirements ... 23
6.3.4 Initial inspection of factory and of FPC ... 23
6.3.5 Continuing surveillance of FPC ... 24
6.3.6 Procedure for modifications ... 24
6.3.7 Pre-production products (e.g. prototypes) ... 24
7 Marking, labelling and packaging ... 25
7.1 General ... 25
7.2 Deluge alarm valve ... 26

Documents
Document Sharing Hub
Full document details: BS EN 12259-9:2019

8 Instructions for installation and operation 26
Annex A (normative) Fire exposure test for body and cover 27
Annex B (normative) Strength test for body and cover 29
Annex C (normative) Flow tests for deluge alarm valves 30
C.1 Automatic drain valve operation 30
C.2 Flow through open drain 30
C.3 Hydraulic friction loss test 30
Annex D (normative) Sealing assembly tests 32
D.1 Fatigue test for springs and diaphragms 32
D.2 Anti-reseating test 32
D.3 Differential pressure ratio test 32
Annex E (normative) Performance tests 34
E.1 Resistance of body and sealing assembly to leakage and deformation 34
E.2 Operational characteristics of a deluge alarm valve 34
Annex F (normative) Resistance to ageing test for non-metallic components (excluding diaphragms, gaskets and seals) 36
F.1 Air oven ageing for components normally exposed to air when in the ready condition 36
F.2 Warm water ageing for components normally exposed to water when in the ready condition 36
Annex G (normative) Leakage resistance test 37
Annex H (normative) Test for sealing assembly elements - Resistance to adhesion 38
Annex I (normative) Endurance test - Procedure 39
Annex J (normative) Salt mist corrosion test 40
J.1 Reagents 40
J.2 Apparatus 40
J.3 Procedure 40
Annex K (informative) Typical testing schedule and example of test specimen number of deluge alarm valves 41
Bibliography 42

Documents
Document Sharing Hub
Full document details: BS EN 12259-9:2019

European foreword

This document (EN 12259-9:2019) has been prepared by Technical Committee CEN/TC 191 "Fixed firefighting systems", the secretariat of which is held by BSI.

This European Standard shall be given the status of a national standard, either by publication of an identical text or by endorsement, at the latest by October 2019 and conflicting national standards shall be withdrawn at the latest by January 2021.

Attention is drawn to the possibility that some of the elements of this document may be the subject of patent rights. CEN shall not be held responsible for identifying any or all such patent rights.

EN 12259, *Fixed firefighting systems - Components for sprinkler and water spray systems*, consists of the following parts:

— *Part 1: Sprinklers;*

— *Part 2: Wet alarm valve assemblies;*

— *Part 3: Dry alarm valve assemblies;*

— *Part 4: Water motor alarms;*

— *Part 5: Water flow detectors;*

— *Part 6: Pipe couplings* (in preparation);

— *Part 7: Pipe hangers* (in preparation);

— *Part 8: Pressure switches* (in preparation);

— *Part 9: Deluge alarm valves;*

— *Part 10: Multiple controls* (in preparation);

— *Part 11: Medium and high velocity water sprayers* (in preparation);

— *Part 12: Pump sets* (in preparation);

— *Part 14: Sprinklers for residential applications* (in preparation).

According to the CEN-CENELEC Internal Regulations, the national standards organizations of the following countries are bound to implement this European Standard: Austria, Belgium, Bulgaria, Croatia, Cyprus, Czech Republic, Denmark, Estonia, Finland, Former Yugoslav Republic of Macedonia, France, Germany, Greece, Hungary, Iceland, Ireland, Italy, Latvia, Lithuania, Luxembourg, Malta, Netherlands, Norway, Poland, Portugal, Romania, Serbia, Slovakia, Slovenia, Spain, Sweden, Switzerland, Turkey and the United Kingdom.

Documents
Document Sharing Hub

Full document details: BS EN 12259-9:2019

1 Scope

This part of EN 12259 specifies requirements, test methods, evaluation of conformity and marking of deluge alarm valves with a nominal size range DN40 to DN250 intended to be used for fire safety.

This document is applicable to clapper type and diaphragm type valves; it is not applicable to elastomeric sleeve type valves and does not include rules for design, installation and maintenance of fire protection water spray systems.

Auxiliary components and attachments to deluge alarm valves are not covered by this part of EN 12259 with the exception of automatic drain valves.

2 Normative references

The following documents are referred to in the text in such a way that some or all of their content constitutes requirements of this document. For dated references, only the edition cited applies. For undated references, the latest edition of the referenced document (including any amendments) applies.

EN ISO 898-1:2013, *Mechanical properties of fasteners made of carbon steel and alloy steel — Part 1: Bolts, screws and studs with specified property classes — Coarse thread and fine pitch thread (ISO 898-1:2013)*

EN ISO 898-2:2012, *Mechanical properties of fasteners made of carbon steel and alloy steel — Part 2: Nuts with specified property classes — Coarse thread and fine pitch thread (ISO 898-2:2012)*

3 Terms and definitions

For the purposes of this document, the following terms and definitions apply.

ISO and IEC maintain terminological databases for use in standardization at the following addresses:

— IEC Electropedia: available at http://www.electropedia.org/

— ISO Online browsing platform: available at http://www.iso.org/obp

3.1
alarm device
mechanical or electrical device to sound an alarm on operation of the deluge alarm valve

3.2
automatic drain (valve)
device, usually remaining open, which automatically drains water from the deluge alarm valve

3.3
clapper
type of sealing assembly

3.4
deluge system
automatic fire protection system using a deluge alarm valve assembly, which is operated by auxiliary means to admit water into a system of sprayers

Documents
Document Sharing Hub
Full document details: BS EN 12259-9:2019

3.5
deluge alarm valve
water supply control valve intended to be operated by an auxiliary means to admit water into a system of piping with open sprayers

Note 1 to entry: The auxiliary means of operating a deluge alarm valve may be mechanical, electrical, hydraulic, pneumatic, thermal, manual or a combination of these.

3.6
differential pressure
difference between pressure measurements taken upstream and downstream of a deluge valve, corrected for the pressure caused by elevation between the measurement points

3.7
diaphragm
type of sealing assembly

3.8
dry pilot actuator
differential type valve which permits the operation of a hydraulically operated deluge alarm valve upon loss of pneumatic pressure from a dry pilot line

3.9
dry pilot line
pneumatic detection and actuation piping system fitted with heat responsive devices, usually sprinklers, which, when subjected to an abnormal source of heat, operate to release pressure from the piping system and dry pilot actuator, causing the automatic operation of a deluge alarm valve

3.10
pressure-loss operated deluge alarm valve
water supply control valve, maintained in the set condition by pressure (hydraulic/pneumatic) that holds the sealing assembly closed or acts against a diaphragm or piston that holds the sealing assembly closed

Note 1 to entry: A change in pressure against the diaphragm or piston allows the valve to open.

3.11
maximum design flow
maximum flow rate at which the deluge alarm valve is intended to operate

3.12
minimum service pressure
lowest static water pressure required at the inlet to the deluge alarm valve in the ready condition

3.13
nominal working pressure
maximum service pressure at which the deluge alarm valve is intended to operate

3.14
priming water
water to be provided at the outlet of the valve in the ready condition

Documents
Document Sharing Hub
Full document details: BS EN 12259-9:2019

3.15
supply-pressure operated deluge alarm valve
water supply control valve, maintained in the set position by a spring or other means and hydraulically operated by the application of supply pressure to an auxiliary diaphragm or piston

3.16
ready (set) condition
state of the deluge alarm valve, with sealing assembly in the set position with the service pressure applied

3.17
reseating prevention
avoidance of the sealing assembly returning to the closed position

3.18
resetting (valve)
returning of the valve to the ready (set) condition

3.19
sealing assembly
main movable sealing element of the deluge alarm valve

3.20
sealing assembly seat
main fixed sealing element of the deluge alarm valve

3.21
service pressure
static water pressure at the inlet to the deluge alarm valve in the ready condition

3.22
trim
external equipment and pipework, excluding the main installation pipework, fitted to the deluge alarm valve assembly, as specified by the supplier

3.23
trip point
point at which the deluge alarm valve operates, admitting water into the deluge system piping, measured in terms of the pilot line pressure and service pressure and expressed as a ratio

3.24
water motor alarm
hydraulically actuated alarm device (see 3.1) fitted to the deluge alarm valve to provide a local audible alarm when the deluge system operates

3.25
wet pilot line
hydraulic detection and actuation piping system fitted with heat responsive devices, usually automatic sprinklers, which, when subjected to an abnormal source of heat, operate to release pressure from the piping system, causing the automatic operation of a deluge alarm valve

Documents
Document Sharing Hub
Full document details: BS EN 12259-9:2019

4 Product characteristics

4.1 Operational reliability

4.1.1 Working pressure

4.1.1.1 The manufacturer shall specify the nominal working pressure.

The deluge alarm valve shall meet the requirements of 4.1.1.2 to 4.1.1.5.

The performance shall be expressed as the working pressure in bar.

4.1.1.2 The deluge alarm valve with the sealing assembly open shall withstand, without rupture, an internal hydrostatic pressure of four times the nominal working pressure, when tested in accordance with Annex B.

4.1.1.3 If the test described in Annex B is not performed on standard production fasteners, the supplier shall provide documentation showing, by calculation, that the normal design load of any standard production fastener, excluding the force required to compress the gasket, does not exceed the minimum tensile strength specified in standards EN ISO 898-1:2013 and EN ISO 898-2:2012 or other appropriate standards for materials not covered by these standards, when the deluge alarm valve is pressurized to four times the nominal working pressure. The area of the application of pressure shall be calculated as follows:

— if a full-face gasket is used, the area of force application is that extending out to line defined by the inner edge of the bolts;

— if a toroidal sealing ring or ring gasket is used, the area of force application is that extending out to the centre line of the toroidal sealing ring or ring gasket.

4.1.1.4 The deluge alarm valve with the sealing assembly open shall withstand, without leakage, permanent distortion or rupture, an internal hydrostatic pressure of not less than twice the nominal working pressure when tested in accordance with E.1.

4.1.1.5 The deluge alarm valve shall withstand, without leakage, permanent distortion or structural failure, an internal hydrostatic pressure of not less than twice the nominal working pressure applied at the upstream end with the sealing assembly closed and the pilot line pressurized to twice the supplier's recommended pressure when tested in accordance with E.1.

The performance shall be expressed as the nominal working pressure in bar.

4.1.2 Range of operation

4.1.2.1 The supplier shall specify

— the minimum service pressure, and

— the maximum design flow.

The deluge alarm valve shall meet the requirements of 4.1.2.2 to 4.1.2.12

The performance shall be expressed as the minimum service pressure in bar, the maximum design flow in l/min. and as having met the requirements of each clause.

4.1.2.2 There shall be no sign of damage to the sealing elements of the deluge alarm valve or any permanent twist, bend or fracture of any parts after testing in accordance with E.2.

Documents
Document Sharing Hub
Full document details: BS EN 12259-9:2019

4.1.2.3 Deluge alarm valves, equipped with a trim in accordance with the manufacturer's instructions, shall not be capable of resetting after release without the need of manual intervention.

Deluge alarm valves shall be provided with a means which prevents the valve from reseating until manually reset where:

a) the ratio of service pressure to valve outlet pressure, at the point where the tripped valve reopens exceeds 1,16 to 1, for service pressures between the minimum service pressure and the nominal working pressure, or

b) the installation drain is located upstream of the sealing assembly.

Deluge alarm valves having a latch for the prevention of reseating shall be tested in accordance with D.2 and E.2, without sustaining permanent distortion, cracks, delamination or other signs of failure.

Valves which are not equipped with a device which prevents the valve from reseating, and for which the ratio of service pressure to valve outlet pressure at the point where the tripped valves reopens is unknown or estimated, shall be tested in accordance with D.3 to determine the ratio of service pressure to valve outlet pressure.

The supplier may provide details of the deluge alarm valve estimated ratio of service pressure to valve outlet pressure at the point where the tripped valve reopens by submitting test evidence or calculations.

4.1.2.4 There shall be no leakage of water when the deluge alarm valve assembly is tested in accordance with E.2.

Valve sealing surfaces should withstand ordinary wear and tear, rough usage, compression stresses and damage due to pipe scale or foreign matter carried by the water.

4.1.2.5 When tested in accordance with E.2.1 and E.2.2 the deluge alarm valve assembly shall operate correctly in accordance with the supplier's performance details, without adjustment or damage, at service pressures within the range of the minimum service pressure to the nominal working pressure.

The supplier should provide performance details that should include the deluge alarm valve actuator operating pressure and K-factors. Details of the pilot line height limitations above the deluge alarm valve should be provided for wet pilot line operated deluge alarm valves.

4.1.2.6 A deluge alarm valve in the ready condition shall withstand without opening permanently a water supply pressure failure, where the water supply pressure drops from the nominal working pressure to 0 bar and remains at 0 bar for a period of 1 h and then rises to the nominal working pressure at the rate of not less than 5 bar/s, when tested in accordance with E.2.3.

4.1.2.7 A pressure-loss operated deluge alarm valve shall operate before the pressure at the actuating mechanism reaches the minimum specified by the supplier.

4.1.2.8 A deluge alarm valve operated by supply pressure shall operate when the pressure at the actuating mechanism in the valve is:

— not more than two thirds the pressure requirements stated by the supplier and

— not more than half the supply pressure

within the range of the minimum service pressure specified by the supplier to the nominal working pressure.

Documents
Document Sharing Hub
Full document details: BS EN 12259-9:2019

4.1.2.9 At all specified flow velocities and associated pressure ranges, an alarm line pressure in excess of 0,5 bar shall be ensured when tested in accordance with Annex I.

4.1.2.10 When tested in accordance with E.2.1 and E.2.2, deluge alarm valve line connections shall conform to the following:

a) the valve shall provide a pressure of not less than 0,5 bar at the alarm port at the minimum service pressure while actuating relevant water motor alarms and electric alarm devices;

b) the piping between the deluge alarm valve or any alarm shut-off valve, and the alarm devices shall drain automatically after each operation.

4.1.2.11 When tested in accordance with E.2, the deluge alarm valve shall actuate associated mechanical and electrical alarm devices.

4.1.2.12 There shall be no leakage across the sealing assembly of deluge alarm valve in the ready condition or into the alarm port when tested in accordance with Annex G.

4.1.3 Pressure loss due to hydraulic friction loss

The supplier shall specify the pressure loss in bar at a velocity of 5 m/s, based on the nominal diameter of the valve.

The pressure loss across the deluge alarm valve shall not be more than 0,5 bar and within ±10 % of the supplier's specification when tested in accordance with C.3.

The performance shall be expressed as the pressure loss in bar at a velocity of 5 m/s, based on the nominal diameter of the valve.

4.1.4 Operational reliability of moving parts

NOTE Clearances are necessary between moving parts and between moving and stationary parts so that corrosion or deposits of foreign matter within an assembly will not render the deluge alarm valve sluggish in action or inoperative.

4.1.4.1 Clapper type valves shall conform with 4.1.4.2 to 4.1.4.7 and diaphragm type valves shall conform with 4.1.4.3, 4.1.4.4, 4.1.4.7 and 4.1.4.8.

The performance shall be expressed as the description "Requirements are met".

4.1.4.2 The radial clearance (see Figure 1 a) between the sealing assembly, including the hinge boss areas, and the inside walls of the body (excluding moving catches and latching mechanisms) in every position except the wide open position shall be not less than 12 mm if the body is cast iron or 6 mm if the body and sealing assembly are of non-ferrous metal, stainless steel, titanium or materials having at least equivalent physical, mechanical and corrosion resistant properties.

4.1.4.3 There shall be diametrical clearance (see Figure 1 b) between the inner edge of the seat ring and the metal parts of the sealing assembly when in the close position, excluding any latching mechanisms, as follows:

a) for sealing assemblies of bronze, brass, stainless steel or titanium or materials having equivalent physical and mechanical properties, the diametrical clearance shall not be less than 0,7 mm;

b) for sealing assemblies of other materials, the diametrical clearance shall not be less than 3,0 mm.

Documents
Document Sharing Hub
Full document details: BS EN 12259-9:2019

4.1.4.4 Any space in which the sealing assembly may trap debris below the valve seat shall be not less than 3 mm deep.

4.1.4.5 Valves with a diametrical clearance (see Figure 1 b) between any pins and their bearings less than 0,125 mm shall operate correctly when tested in accordance with E.2 and E.1, following exposure to a salt mist corrosion test in accordance with Annex J.

4.1.4.6 The axial clearance (L2-L1, see Figure 1 c) between any clapper hinge and the adjacent deluge alarm valve body bearing surfaces shall not be less than the value in Table 1.

Where applicable, as indicated in Table 1, a means, employing bronze, brass, stainless steel, titanium or materials having at least equivalent physical, mechanical and corrosion resistant properties shall be provided to maintain dimension A (see Figure 1 c) at not less than the appropriate value in Table 1.

NOTE Shoulder or projecting straight bushings, projecting hinge pin bearings, or spacers are typically employed as a means of maintaining dimension A.

Documents
Document Sharing Hub

Full document details: BS EN 12259-9:2019

Table 1 — Axial clearance (L_2 – L_1) and dimension 'A' values for differing body and sealing assembly construction materials

Body and sealing assembly materials of construction	Axial clearance (L_2-L_1) (see Figure 1 c) mm	Dimension A (see Figure 1 c) mm	Additional testing requirements
Body and sealing assembly made of bronze, brass, stainless steel, titanium or materials having at least equivalent physical, mechanical and corrosion resistant properties	≥ 0,25mm	Not applicable	None
Bodies and or sealing assemblies made of materials other than above (for example, cast iron)	≥ 0,25 mm	≥ 3,0 mm	None
	≥ 1,50 mm	≥ 2,0 mm	See footnote [a]
[a] The valve shall operate correctly when tested in accordance with E.2 and E.1 following exposure to a salt mist corrosion test in accordance with Annex J.			

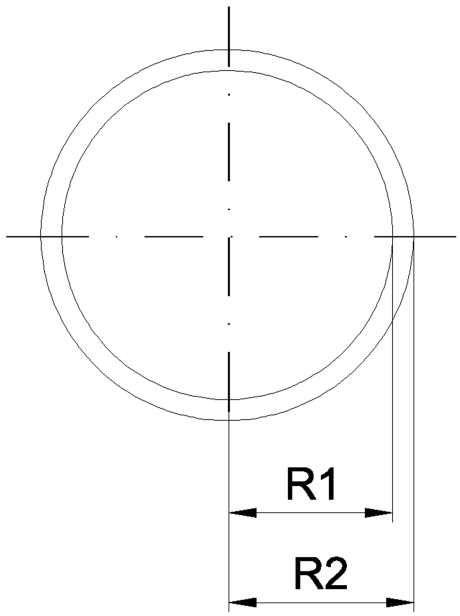

a) Radial clearance = R_2 - R_1

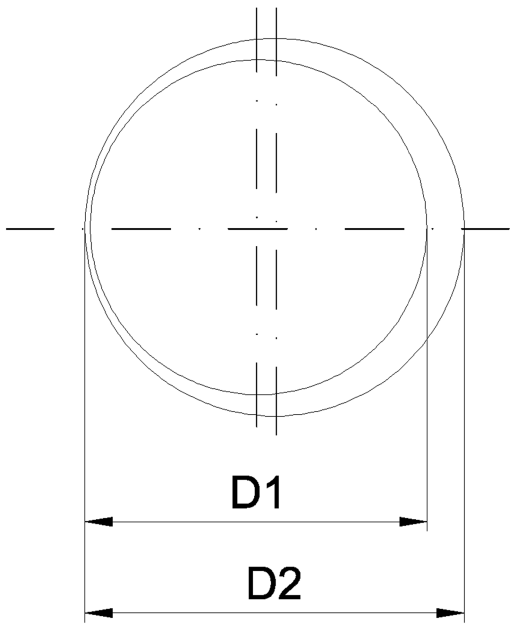

b) Diametrical clearance = D_2 - D_1

Documents
Document Sharing Hub
Full document details: BS EN 12259-9:2019