BS EN 12418:2021

BSI Standards Publication

Masonry and stone cutting-off machines for job site — Safety

Documents
Document Sharing Hub

Full document details: BS EN 12418:2021

National foreword

This British Standard is the UK implementation of EN 12418:2021. It supersedes BS EN 12418:2000+A1:2009, which is withdrawn.

The UK participation in its preparation was entrusted to Technical Committee B/513/-/6, Demolition, cutting, roughening, smoothing and splitting machines - Safety.

A list of organizations represented on this committee can be obtained on request to its committee manager.

This publication has been prepared under a mandate given to the European Standards Organizations by the European Commission and the European Free Trade Association. It is intended to support requirements of the EU legislation detailed in the European Foreword. A European Annex, usually Annex ZA or ZZ, describes how this publication relates to that EU legislation.

For the Great Britain market (England, Scotland and Wales), if UK Government has designated this publication for conformity with UKCA marking (or similar) legislation, it may contain an additional National Annex. Where such a National Annex exists, it shows the correlation between this publication and the relevant UK legislation. If there is no National Annex of this kind, the relevant Annex ZA or ZZ in the body of the European text will indicate the relationship to UK regulation applicable in Great Britain. References to EU legislation may need to be read in accordance with the UK designation and the applicable UK law. Further information on designated standards can be found at www.bsigroup.com/standardsandregulation.

For the Northern Ireland market, UK law will continue to implement relevant EU law subject to periodic confirmation. Therefore Annex ZA/ZZ in the European text, and references to EU legislation, are still valid for this market.

UK Government is responsible for legislation. For information on legislation and policies relating to that legislation, consult the relevant pages of www.gov.uk.

Contractual and legal considerations

This publication has been prepared in good faith, however no representation, warranty, assurance or undertaking (express or implied) is or will be made, and no responsibility or liability is or will be accepted by BSI in relation to the adequacy, accuracy, completeness or reasonableness of this publication. All and any such responsibility and liability is expressly disclaimed to the full extent permitted by the law.

This publication is provided as is, and is to be used at the recipient's own risk.

The recipient is advised to consider seeking professional guidance with respect to its use of this publication.

This publication is not intended to constitute a contract. Users are responsible for its correct application.

© The British Standards Institution 2021
Published by BSI Standards Limited 2021

ISBN 978 0 539 01687 1

Documents
Document Sharing Hub

Full document details: BS EN 12418:2021

ICS 91.220

Compliance with a British Standard cannot confer immunity from legal obligations.

This British Standard was published under the authority of the Standards Policy and Strategy Committee on 31 December 2021.

Amendments/corrigenda issued since publication

Date	Text affected

Documents
Document Sharing Hub

Documents
Document Sharing Hub

EUROPEAN STANDARD

NORME EUROPÉENNE

EUROPÄISCHE NORM

EN 12418

December 2021

ICS 91.220

Supersedes EN 12418:2000+A1:2009

English Version

Masonry and stone cutting-off machines for job site - Safety

Scies de chantier à tronçonner les matériaux - Sécurité

Steintrennmaschinen für den Baustelleneinsatz - Sicherheit

This European Standard was approved by CEN on 15 November 2021.

CEN members are bound to comply with the CEN/CENELEC Internal Regulations which stipulate the conditions for giving this European Standard the status of a national standard without any alteration. Up-to-date lists and bibliographical references concerning such national standards may be obtained on application to the CEN-CENELEC Management Centre or to any CEN member.

This European Standard exists in three official versions (English, French, German). A version in any other language made by translation under the responsibility of a CEN member into its own language and notified to the CEN-CENELEC Management Centre has the same status as the official versions.

CEN members are the national standards bodies of Austria, Belgium, Bulgaria, Croatia, Cyprus, Czech Republic, Denmark, Estonia, Finland, France, Germany, Greece, Hungary, Iceland, Ireland, Italy, Latvia, Lithuania, Luxembourg, Malta, Netherlands, Norway, Poland, Portugal, Republic of North Macedonia, Romania, Serbia, Slovakia, Slovenia, Spain, Sweden, Switzerland, Turkey and United Kingdom.

EUROPEAN COMMITTEE FOR STANDARDIZATION
COMITÉ EUROPÉEN DE NORMALISATION
EUROPÄISCHES KOMITEE FÜR NORMUNG

CEN-CENELEC Management Centre: Rue de la Science 23, B-1040 Brussels

© 2021 CEN All rights of exploitation in any form and by any means reserved worldwide for CEN national Members.

Ref. No. EN 12418:2021 E

Documents
Document Sharing Hub

Full document details: BS EN 12418:2021

Contents

Page

European foreword 5
Introduction 6
1 Scope 7
2 Normative references 7
3 Terms and definitions 9
4 Safety requirements and/or protective/risk reduction measures 12
4.1 General 12
4.2 Mechanical hazard 12
4.2.1 General 12
4.2.2 Protection against moving parts 13
4.2.3 Minimum strength of the guards 15
4.2.4 Frame and legs 15
4.2.5 Transport and handling 15
4.2.6 Fixing of the cutting-off wheel 15
4.2.7 Combustion engine-starting device 15
4.2.8 Guiding device of the table and for the material 16
4.2.9 Control devices 16
4.2.10 Failure of the power supply 17
4.3 Electrical hazards 17
4.3.1 General 17
4.3.2 Water pump 17
4.4 Thermal hazards 17
4.4.1 General 17
4.4.2 Test method 17
4.5 Exhaust fumes (and gas) 17
4.6 Fluid containers 18
4.7 Protection against water splashes and dust emissions 18
4.8 Rotational speed 18
4.9 Noise 18
4.9.1 Noise reduction at the design stage 18
4.9.2 Noise emission measurement, declaration and verification procedures 19
4.10 Vibrations 19
4.11 Maintenance 19
5 Verification of safety requirements and/or protective/risk reduction measures 20
6 Information for use 22
6.1 General 22
6.2 Marking, warnings and signs 22
6.2.1 Marking 22
6.2.2 Warnings and signs 22
6.3 Accompanying documents 23
6.3.1 Instruction handbook 23
6.3.2 Description of the machine 23
6.3.3 Instructions for transport, handling and storage of the machine and its dismountable parts 24
6.3.4 Instructions for the installation and the use of the machine 24

AVA Documents
Document Sharing Hub

Full document details: BS EN 12418:2021

6.3.5 Maintenance instructions ... 26
Annex A (informative) List of significant hazards ... 27
Annex B (normative) Noise test code - accuracy grade 2 ... 29
B.1 General ... 29
B.2 Measurement of the A-weighted emission sound pressure level at the workstation of the operator ... 29
B.3 Determination of the sound power level emitted by the machine ... 30
B.4 Measurement uncertainties ... 30
B.5 Operating conditions ... 31
B.6 Information to be recorded ... 32
B.7 Information to be reported ... 32
B.8 Noise emission declaration by the manufacturer ... 32
Annex C (normative) Dimensions of the flanges for cutting-off diamond wheel ... 34
C.1 General ... 34
C.2 Ratios to the diameters of the cutting-off wheel ... 34
C.3 Minimum diameter *S* of the flange ... 35
C.4 Minimum width *R* of contact surface of the flange with the cutting-off wheel ... 35
C.5 Depth of the clearance *T* ... 35
Annex D (normative) Strength of guards - State of the art concerning the characteristics of guards used with cutting-off wheels ... 36
D.1 General ... 36
D.2 Guard specifications for type−1 and −2 machines (see 3.2) ... 36
D.2.1 Calculation method ... 36
D.2.2 Example of a minimum thickness of guards made with E24 grade-2 steel (alternative to D.2.1) ... 39
D.2.3 Other methods for determining the minimum thickness of guards ... 40
Annex E (informative) Safety signs ... 41
Annex F (normative) Verification of surface temperature ... 43
F.1 Test equipment ... 43
F.2 Test method ... 43
F.3 Test acceptance ... 43
Annex G (informative) Vibration-test code ... 44
G.1 General ... 44
G.2 Terms and definitions ... 44
G.3 Vibration parameters to be measured and determined ... 44
G.4 Instrumentation ... 44
G.4.1 General ... 44

Documents
Document Sharing Hub

Full document details: BS EN 12418:2021

G.4.2 Accelerometer 44
G.4.3 Fastening of accelerometer 44
G.4.4 Calibration 45
G.5 Operating conditions, testing and declaration of results 45
G.6 Uncertainties 45
G.7 Information 46
Annex ZA (informative) Relationship between this European Standard and the essential requirements of EU Directive 2006/42/EC aimed to be covered 47
Bibliography 49

Documents
Document Sharing Hub
Full document details: BS EN 12418:2021

European foreword

This document (EN 12418:2021) has been prepared by Technical Committee CEN/TC 151 “Construction equipment and building material machines - Safety”, the secretariat of which is held by DIN.

This European Standard shall be given the status of a national standard, either by publication of an identical text or by endorsement, at the latest by June 2022, and conflicting national standards shall be withdrawn at the latest by June 2022.

Attention is drawn to the possibility that some of the elements of this document may be the subject of patent rights. CEN shall not be held responsible for identifying any or all such patent rights.

This document supersedes EN 12418:2000+A1:2009.

This document has been prepared under a Standardization Request given to CEN by the European Commission and the European Free Trade Association, and supports essential requirements of EU Directive(s).

For relationship with EU Directive(s), see informative Annex ZA, which is an integral part of this document.

The main differences between this document and EN 12418:2000+A1:2009 are as follows:

a) normative references (Clause 2) revised and updated;

b) list of significant hazards revised and updated;

c) requirements for design of the cutting-off wheel guard;

d) requirements for warnings;

e) requirements for Information for use;

f) requirements for operator's instructions;

g) requirements for noise test code;

h) illustrations and pictograms updated.

Any feedback and questions on this document should be directed to the users’ national standards body. A complete listing of these bodies can be found on the CEN website.

According to the CEN-CENELEC Internal Regulations, the national standards organisations of the following countries are bound to implement this European Standard: Austria, Belgium, Bulgaria, Croatia, Cyprus, Czech Republic, Denmark, Estonia, Finland, France, Germany, Greece, Hungary, Iceland, Ireland, Italy, Latvia, Lithuania, Luxembourg, Malta, Netherlands, Norway, Poland, Portugal, Republic of North Macedonia, Romania, Serbia, Slovakia, Slovenia, Spain, Sweden, Switzerland, Turkey and the United Kingdom.

Documents
Document Sharing Hub

Full document details: BS EN 12418:2021

Introduction

This document is a type-C standard as stated in EN ISO 12100.

This document is of relevance, in particular, for the following stakeholder groups representing the market players with regard to machinery safety:

— machine manufacturers (small, medium and large enterprises);

— health and safety bodies (regulators, accident prevention organizations, market surveillance, etc.).

Others can be affected by the level of machinery safety achieved with the means of the document by the above-mentioned stakeholder groups:

— machine users/employers (small, medium and large enterprises);

— machine users/employees (e.g. trade unions, organizations for people with special needs);

— service providers, e.g. for maintenance (small, medium and large enterprises);

— consumers (in case of machinery intended for use by consumers).

The above-mentioned stakeholder groups have been given the possibility to participate in the drafting process of this document.

The machinery concerned and the extent to which hazards, hazardous situations or hazardous events are covered are indicated in the Scope of this document.

When requirements of this type-C standard are different from those which are stated in type-A or type-B standards, the requirements of this type-C standard take precedence over the requirements of the other standards for machines that have been designed and built according to the requirements of this type-C standard.

Documents
Document Sharing Hub

Full document details: BS EN 12418:2021

1 Scope

This document applies to transportable masonry and stone cutting-off machines stationary during work, principally used on job site building construction for cutting-off stones, other mineral construction materials and composite materials having at least one supporting surface. The power for the tool rotation is supplied by electrical or internal combustion prime motor.

This document deals with all significant hazards, hazardous situations or hazardous events relevant to masonry and stone cutting-off machines for job site (see Annex A), when they are used as intended and under conditions of misuse which are reasonably foreseeable by the manufacturer. This document specifies the appropriate technical measures to eliminate or reduce risks arising from the significant hazards during the lifetime of the machinery as described in EN ISO 12100:2010, 5.4.

These machines are designed for use with rotating diamond cutting-off wheels with a continuous rim and/or segmented rim.

This document does not apply to:

— metal cutting-off machines;

— wood and timber sawing machines;

— machines with a feed or descent mechanism other than manual, or with a pedal;

— mobile machines on a trolley travelling on the ground;

— hand-held portable grinding and cutting-off machines;

— hand-held portable grinding and cutting-off machines mounted on a support to be used in a fixed position.

This document does not cover the operation of transportable masonry and stone cutting-off machines in potential explosive atmospheres.

In this document, the masonry and stone cutting-off machines for job site construction are called: “cutting-off machines” or “machines”, and cutting-off wheels are also called: “tools”.

This document applies to machines which are manufactured after the date of approval of the standard by CEN.

2 Normative references

The following documents are referred to in the text in such a way that some or all of their content constitutes requirements of this document. For dated references, only the edition cited applies. For undated references, the latest edition of the referenced document (including any amendments) applies.

EN 13236:2019, *Safety requirements for superabrasive products*

EN 60204-1:2018, *Safety of machinery — Electrical equipment of machines — Part 1: General requirements (IEC 60204-1:2016, modified)*

EN 60335-2-41:2003,[1] *Household and similar electrical appliances — Safety — Part 2-41: Particular requirements for pumps (IEC 60335-2-41:2002)*

---

[1] As impacted by EN 60335-2-41:2003/A1:2004 and EN 60335-2-41:2003/A2:2010.

Documents
Document Sharing Hub
Full document details: BS EN 12418:2021

EN 60529:1991,[2] *Degrees of protection provided by enclosures (IP Code) (IEC 60529:1991)*

EN ISO 3744:2010, *Acoustics — Determination of sound power levels and sound energy levels of noise sources using sound pressure — Engineering methods for an essentially free field over a reflecting plane (ISO 3744:2010)*

EN ISO 4871:2009, *Acoustics — Declaration and verification of noise emission values of machinery and equipment (ISO 4871:1996)*

EN ISO 11201:2010, *Acoustics — Noise emitted by machinery and equipment — Determination of emission sound pressure levels at a work station and at other specified positions in an essentially free field over a reflecting plane with negligible environmental corrections (ISO 11201:2010)*

EN ISO 11688-1:2009, *Acoustics — Recommended practice for the design of low-noise machinery and equipment — Part 1: Planning (ISO/TR 11688-1:1995)*

EN ISO 12100:2010, *Safety of machinery — General principles for design — Risk assessment and risk reduction (ISO 12100:2010)*

EN ISO 13732-1:2008, *Ergonomics of the thermal environment — Methods for the assessment of human responses to contact with surfaces — Part 1: Hot surfaces (ISO 13732-1:2006)*

EN ISO 13849-1:2015, *Safety of machinery — Safety-related parts of control systems — Part 1: General principles for design (ISO 13849-1:2015)*

EN ISO 13854:2019, *Safety of machinery —Minimum gaps to avoid crushing of parts of the human body (ISO 13854:2017)*

EN ISO 13857:2019, *Safety of machinery — Safety distances to prevent hazard zones being reached by upper and lower limbs (ISO 13857:2019)*

EN ISO 14120:2015, *Safety of machinery — Guards — General requirements for the design and construction of fixed and movable guards (ISO 14120:2015)*

---

[2] As impacted by EN 60529:1991/AC:2006-12, EN 60529:1991/A1:2000, EN 60529:1991/A2:2013 and EN 60529:1991/A2:2013/AC:2019-02.

Documents
Document Sharing Hub

Full document details: BS EN 12418:2021

3 Terms and definitions

For the purposes of this document, the terms and definitions given in EN ISO 12100:2010 and the following apply.

ISO and IEC maintain terminological databases for use in standardization at the following addresses:

— IEC Electropedia: available at https://www.electropedia.org/

— ISO Online browsing platform: available at https://www.iso.org/obp

3.1
cutting-off machine
transportable machine used in building and site construction, operating at a stationary position and is intended for cutting primarily construction material of different weight, shape and dimensions, for example natural stone, concrete (reinforced or otherwise), bricks, concrete blocks (breeze blocks), paving slabs or cobblestones, roof tiles and ceramic tiles

Note 1 to entry: The feed of the material, of the table where the material is placed or of the cutting head is made by hand. The cutting head, if movable for cutting depth, is moved manually or by a pedal.

The power source of a cutting-off machine is an electrical motor or an internal combustion engine with built-in tank

Note 2 to entry: Cutting-off machine comprising the following parts:

— frame;

— electric motor or an ICE (internal combustion engine) to drive the cutting-off wheel in rotation;

— cutting head;

— rotating cutting-off wheel (see Clause 1);

— material-carrying table (movable and/or tiltable or not);

— cutting-off wheel guard;

— self-containing water tank with an electrical or mechanical water pump or an alternative water supply.

See also Figure 1

Documents
Document Sharing Hub
Full document details: BS EN 12418:2021

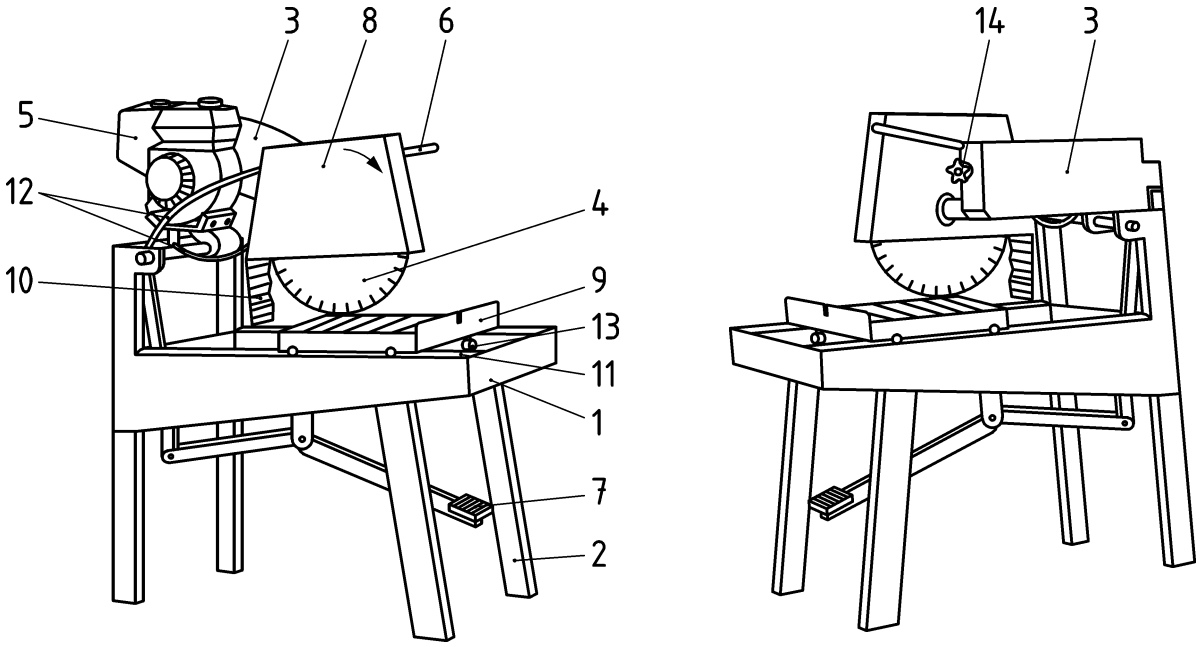

a) Cutting-off machine with internal combustion engine

b) Cutting-off machine with electric motor

Key

1 frame (incorporating the water tank)
2 legs (demountable or otherwise)
3 cutting head - see 3.3
4 cutting-off wheel - see 3.7
5 electric motor (or engine)
6 handle for moving the cutting head
7 foot pedal for lowering the cutting head (if any)
8 cutting-off wheel guard
9 movable table including material stop for supporting materials to be cut
10 water splash deflector
11 table-guiding tracks
12 water supply system
13 front stop of the table
14 cutting depth stop (for type-1 and −2 machines)

Figure 1 — Examples of cutting-off machines

3.2
types of cutting-off machines
cutting-off machines can be basically classified in four different types defined below:

— Type-1 machine: Machine with a movable table for feeding, having a fixed (permanently or by means of clamps) or swinging adjustable cutting head (tiltable or not) which is located over the table;

Note 1 to entry: During the cutting process, the cutting head is in a fixed position.

Documents
Document Sharing Hub
Full document details: BS EN 12418:2021

— Type-2 machine: Machine with a fixed table having a horizontally moving cutting head for feeding and, if applicable, vertically adjustable and tiltable cutting head located over the table;

— Type-3 machine: Machine with a fixed table having a vertically moving cutting head for feeding;

— Type-4 machine: Machine with a fixed or movable table having a fixed or tiltable cutting head, and only intended for use with continuous rim tools having a maximum diameter of 250 mm. The feeding is done by hand or by movable table. The motor is located under the table.

See also Figure 2

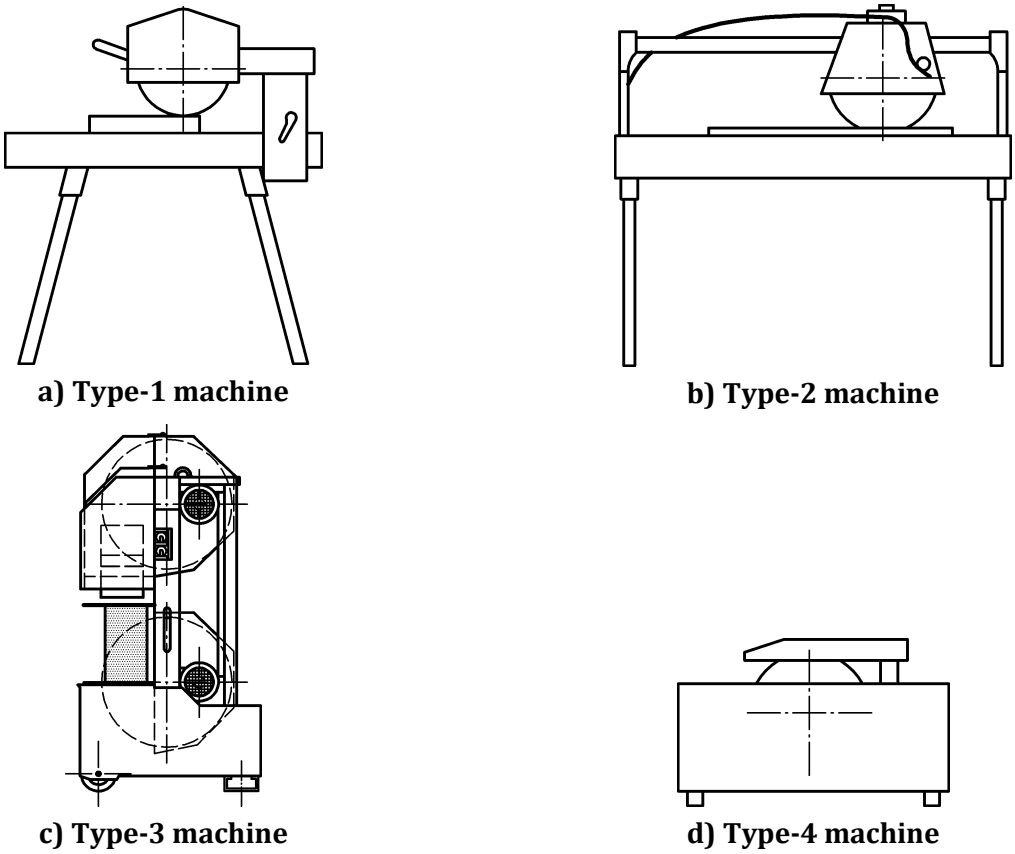

Figure 2 — Types of masonry and stone cutting-off machines

3.3
cutting head
part of the machine where the cutting-off wheel is attached

Note 1 to entry: It can consist of:

— the fixing means for the cutting-off wheel on the spindle;

— the spindle:

— with direct drive from the power unit;

— with power transmission from the power unit;

AVA Documents
Document Sharing Hub

Full document details: BS EN 12418:2021

— the handle;

— the cutting-off wheel guard and the transmission guard (if any) which are movable relative to the frame.

3.4
rated spindle speed
speed of the drive spindle in revolutions per minute (r/min) at the rated conditions specified by the machine manufacturer but without cutting-off wheel and under no load

3.5
nominal mass
mass of the cutting-off machine equipped with all its dismountable parts, but without the cutting-off wheel, the tanks being empty

3.6
maximum operating mass
mass of the cutting-off machine equipped with all its dismountable parts, ready for use, with the cutting-off wheel mounted and the tanks being full

3.7
cutting-off wheel
rotating abrasive tool which performs the cutting operation

Note 1 to entry: The tool is a rotating (segmented or continuous rim) diamond or boron nitride cutting-off wheel.

3.8
flange
mounting device including several parts which securely hold and position the cutting-off wheel on the drive spindle

4 Safety requirements and/or protective/risk reduction measures

4.1 General

Machinery shall comply with the safety requirements and/or protective/risk reduction measures of this clause. In addition, the machine shall be designed according to the principles of EN ISO 12100:2010 for relevant but not significant hazards which are not dealt with by this document.

Covering each significant hazard is sufficient for covering combinations of hazards.

4.2 Mechanical hazard

4.2.1 General

Components and parts which shall be manually handled and all the accessible parts, with the exception of the cutting-off wheel, shall be free of sharp edges and burrs which could generate hazards when setting, using, handling, and maintaining the machine. Burrs resulting from, for example, manufacturing, casting or welding shall be eliminated and sharp edges shall be smoothed.

Documents
Document Sharing Hub
Full document details: BS EN 12418:2021

4.2.2 Protection against moving parts

4.2.2.1 Transmission parts

Rotating transmission parts, for example, couplings and belt drives for drive shafts and mechanical water pumps shall be provided with fixed enclosing guards to prevent contact. These guards shall comply with EN ISO 14120:2015 and EN ISO 13857:2019, Table 4. Fixed enclosing guards shall be held in position either by welding or by mounting them in such a way that they can be opened or removed only with the aid of tools or keys.

Fixed enclosing guards shall have their fixing system permanently attached to the guard and/or the machine when the guard is removed.

4.2.2.2 Connection between the cutting head and the frame

For type-1 machines (see 3.2) with a swinging adjustable cutting head, the cutting head shall be lockable. In this case, the area between the cutting head and the frame of the machine shall be protected to avoid any shearing and crushing hazard. This can be done by taking into account the minimum distances given in EN ISO 13854:2019, Table 1, “finger” or by fixed guards, complying with EN ISO 14120:2015, Clause 5, and EN ISO 13857:2019, Table 2 and Table 4.

4.2.2.3 Moving parts involved in the working process (protection against contact with the cutting-off wheel and its fixing devices)

4.2.2.3.1 General

The safety measures to be taken shall be adapted according to the type of machines (see 3.2).

4.2.2.3.2 Type−1, −2 and −3 machines

The upper part of the cutting-off wheel and its non-smooth fixing device(s) (i.e. spindle nuts or bolts, see Figure 3) shall be covered with a fixed solid guard complying with EN ISO 14120:2015 to avoid inadvertent contact and to protect against ejection of fragments from the cutting-off wheel and the work piece, water, dust and debris. For type-3 machines with a vertically moving cutting head, the cutting-off wheel shall be completely covered sidewise at the upper position.

The guard shall be designed to allow fitting and removal of the cutting-off wheel.

When the guard is removed or opened, the guard-fixing system shall be permanently attached to the guard and/or the machine.

The machine shall be so designed that the absence or the opening of the guard creates a projection of water, dust or debris during operation, which hinders the intended use of the machine.

The following requirements for the design of the cutting-off wheel guard shall be considered:

Both forward (A) and rear (B) edges of the cutting-off wheel guard shall be located below the horizontal plane passing through the centre of the cutting-off wheel when in cutting position shown in Figure 3 a).

The rear edge (B) of the cutting-off wheel guard shall be located, at least, as low as the horizontal plane passing by the lowest point of the spindle fixing device. The foregoing condition shall be fulfilled when the cutting head is in the highest position shown in Figure 3 b).

Documents
Document Sharing Hub
Full document details: BS EN 12418:2021