BS EN 1253-2:2015

BSI Standards Publication

Gullies for buildings

Part 2: Roof drains and floor gullies without trap

bsi.

...making excellence a habit.™

Document Sharing Hub

National foreword

This British Standard is the UK implementation of EN 1253-2:2015. This document, together with BS EN 1253-1:2015, supersedes BS EN 1253-1:2003 and BS EN 1253-2:2003, which are withdrawn.

The UK participation in its preparation was entrusted to Technical Committee B/505, Wastewater engineering.

A list of organizations represented on this committee can be obtained on request to its secretary.

This publication does not purport to include all the necessary provisions of a contract. Users are responsible for its correct application.

© The British Standards Institution 2015. Published by BSI Standards Limited 2015

ISBN 978 0 580 78398 2

ICS 91.140.80

Compliance with a British Standard cannot confer immunity from legal obligations.

This British Standard was published under the authority of the Standards Policy and Strategy Committee on 31 January 2015.

Amendments issued since publication

Date	Text affected

Documents
Document Sharing Hub

Full document details: BS EN 1253-2:2015

EUROPEAN STANDARD

NORME EUROPÉENNE

EUROPÄISCHE NORM

EN 1253-2

January 2015

ICS 91.140.80

Supersedes EN 1253-1:2003, EN 1253-2:2003

English Version

Gullies for buildings - Part 2: Roof drains and floor gullies without trap

Avaloirs et siphons pour bâtiments - Partie 2 : Avaloirs de toiture et avaloirs/siphons de sol sans garde d'eau

Abläufe für Gebäude - Teil 2: Dachabläufe und Bodenabläufe ohne Geruchverschluss

This European Standard was approved by CEN on 22 November 2014.

CEN members are bound to comply with the CEN/CENELEC Internal Regulations which stipulate the conditions for giving this European Standard the status of a national standard without any alteration. Up-to-date lists and bibliographical references concerning such national standards may be obtained on application to the CEN-CENELEC Management Centre or to any CEN member.

This European Standard exists in three official versions (English, French, German). A version in any other language made by translation under the responsibility of a CEN member into its own language and notified to the CEN-CENELEC Management Centre has the same status as the official versions.

CEN members are the national standards bodies of Austria, Belgium, Bulgaria, Croatia, Cyprus, Czech Republic, Denmark, Estonia, Finland, Former Yugoslav Republic of Macedonia, France, Germany, Greece, Hungary, Iceland, Ireland, Italy, Latvia, Lithuania, Luxembourg, Malta, Netherlands, Norway, Poland, Portugal, Romania, Slovakia, Slovenia, Spain, Sweden, Switzerland, Turkey and United Kingdom.

EUROPEAN COMMITTEE FOR STANDARDIZATION
COMITÉ EUROPÉEN DE NORMALISATION
EUROPÄISCHES KOMITEE FÜR NORMUNG

CEN-CENELEC Management Centre: Avenue Marnix 17, B-1000 Brussels

© 2015 CEN All rights of exploitation in any form and by any means reserved worldwide for CEN national Members.

Ref. No. EN 1253-2:2015 E

Documents
Document Sharing Hub

Full document details: BS EN 1253-2:2015

Contents

Page

Foreword 3

1 Scope 4

2 Normative references 4

3 Terms and definitions 4

4 Requirements 9
4.1 Design and construction 9
4.2 Places of installation 10
4.3 Materials 11
4.4 Watertightness 11
4.5 Mechanical strength 11
4.6 Flow rates 11
4.7 Additional requirements in relation to the installation 13

5 Test methods 15
5.1 Dimensions of apertures in gratings 15
5.2 Water tightness for roof drain and floor gully bodies and extensions 15
5.3 Loading test 15
5.4 Mechanical strength 19
5.5 Flow rates 20
5.6 Tightness of roof drains and floor gullies for use with sheet floor coverings, membranes or liquid applied membranes 30
5.7 Behaviour when exposed to hot bitumen or asphalt 31
5.8 Determination of resistance in climatic influences 31
5.9 Temperature cycling test 32

6 Allocation and sequence of tests 32

7 Marking 32

8 Evaluation of conformity 33

Annex A (normative) **Sequence of the tests** 34

Annex B (informative) **A-deviation** 35

Bibliography 36

Documents
Document Sharing Hub

Full document details: BS EN 1253-2:2015

Foreword

This document (EN 1253-2:2015) has been prepared by Technical Committee CEN/TC 165 “Waste water engineering”, the secretariat of which is held by DIN.

This European Standard shall be given the status of a national standard, either by publication of an identical text or by endorsement, at the latest by July 2015 and conflicting national standards shall be withdrawn at the latest by July 2015.

Attention is drawn to the possibility that some of the elements of this document may be the subject of patent rights. CEN [and/or CENELEC] shall not be held responsible for identifying any or all such patent rights.

This document, together with EN 1253-1:2015, supersedes EN 1253-1:2003 and EN 1253-2:2003.

This is the second part in EN 1253, a series of standards relating to floor gullies, roof drains and access covers for drainage systems inside buildings. The EN 1253 series under the main title *Gullies for buildings* will actually consist of the following parts:

— *Part 1: Trapped floor gullies with a depth of water seal of at least 50 mm*;

— *Part 2: Roof drains and floor gullies without trap*;

— *Part 3: Evaluation of conformity*;

— *Part 4: Access covers*;

— *Part 5: Gullies with light liquids closure*.

Since the latest versions of EN 1253-1 and EN 1253-2 the most significant technical changes are the following:

a) reduction of scope on roof outlets and floor gullies without trap including parapet and emergency drains for use in gravity and siphonic drainage systems;

b) more definitive description of products;

c) modification of terms and definitions;

d) precision in definition of places of installation;

e) consideration of liquid applied membranes as connecting components;

f) precision of test conditions for flow rate testing for different types of products;

g) revision of loading test concerning test loads, loading speed as well as shape, size and point of impact of test blocks in dependence on different configuration of gratings;

h) introduction of classification of products concerning their temperature cycling behavior according to number of hot/cold water cycles.

According to the CEN-CENELEC Internal Regulations, the national standards organizations of the following countries are bound to implement this European Standard: Austria, Belgium, Bulgaria, Croatia, Cyprus, Czech Republic, Denmark, Estonia, Finland, Former Yugoslav Republic of Macedonia, France, Germany, Greece, Hungary, Iceland, Ireland, Italy, Latvia, Lithuania, Luxembourg, Malta, Netherlands, Norway, Poland, Portugal, Romania, Slovakia, Slovenia, Spain, Sweden, Switzerland, Turkey and the United Kingdom.

AVA Documents
Document Sharing Hub

Full document details: BS EN 1253-2:2015

1 Scope

This European Standard classifies roof drains and floor gullies without trap for use inside buildings, gives guidance for places of installation and specifies requirements for the construction, design, performance and marking as well as test methods of factory made roof drains and floor gullies without trap (further: floor gullies) for buildings, irrespective of the material for use in drainage systems.

Although normally used to convey rainwater and wastewater, these roof drains and floor gullies without trap may convey other wastewater provided there is no risk of damage to components or of injury to health.

This European Standard does not apply to trapped floor gullies with a depth of water seal of at least 50 mm as specified in EN 1253-1.

2 Normative references

The following documents, in whole or in part, are normatively referenced in this document and are indispensable for its application. For dated references, only the edition cited applies. For undated references, the latest edition of the referenced document (including any amendments) applies.

EN 124, *Gully tops and manhole tops for vehicular and pedestrian areas — Design requirements, type testing, marking, quality control*

EN 476, *General requirements for components used in drains and sewers*

EN 1253-3, *Gullies for buildings — Part 3: Evaluation of conformity*

3 Terms and definitions

For the purposes of this document, the following terms and definitions apply.

3.1
roof drain
non-trapped discharge fitting for the drainage of surface water from roof, balcony and terrace surfaces via a rainwater connecting pipe

Note 1 to entry: See Figure 1.

Note 2 to entry: A roof drain can include an anti-vortex device.

3.2
parapet drain
roof drain for the drainage of flat roofs and roof terraces with a fascia which penetrates the fascia

Note 1 to entry: See Figure 2.

3.3
emergency drain
roof drain for emergency drainage in the form of a roof, parapet or gutter outlet with or without a rainwater connection pipe

Documents
Document Sharing Hub

Full document details: BS EN 1253-2:2015

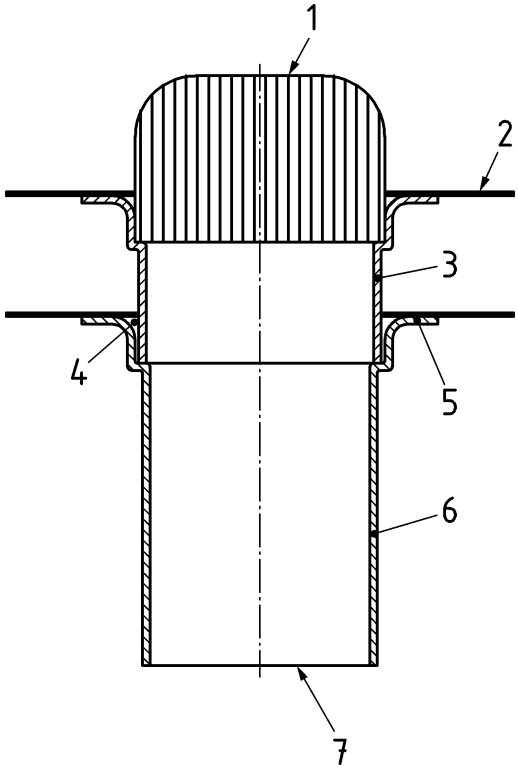

Key

1 grating/frame, leaf/gravel trap
2 liquid applied roof waterproofing kit or flexible sheet for waterproofing
3 extension
4 seal
5 connecting flange
6 body
7 outlet

Figure 1 — Roof drain (example)

Documents
Document Sharing Hub
Full document details: BS EN 1253-2:2015

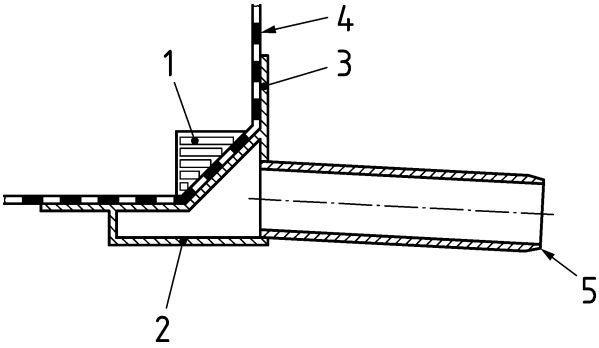

Key

1 grating
2 body
3 connecting flange
4 liquid applied roof waterproofing kit or flexible sheet for waterproofing
5 outlet (round or rectangular)

Figure 2 — Parapet drain (example)

3.4
gravity drainage system
system where flow is caused by gravity and where the pipe normally operates partially full

3.5
siphonic drainage system
system for drainage of rainwater in which the outlets and pipework enable the system to flow completely full under design conditions and make use of the total height available between the outlets and the point of change to partially filled flow

3.6
head of water
depth h of a water line over the spill edge of the roof drain or floor gully as shown in Figure 3

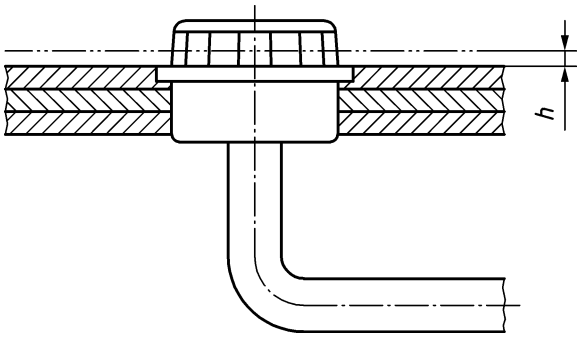

Key

h head of water

Figure 3 — Head of water

3.7
grating
removable component with apertures which permit the discharge of water

Documents
Document Sharing Hub
Full document details: BS EN 1253-2:2015

3.8
frame
support for a grating or cover which is connected to a body either directly or by means of a flexible sheet for waterproofing clamping ring or an extension

3.9
cover
removable part of an access cover which covers the opening

3.10
body
part of a roof drain or floor gully below or in the floor, ground or roof on which the grating/frame/extension is mounted, and to which the pipework is connected

3.11
extension
component used to adjust the height of a grating or cover above a body

3.12
joint
connection between the adjacent ends of two components including the means of sealing

3.13
flexible sheet for waterproofing clamping ring
component used to clamp a flexible sheet for waterproofing to a body or extension

3.14
connecting flange
separate or an integral part of a body or of an extension which receives a flexible sheet for waterproofing or the liquid applied roof waterproofing kit

3.15
external diameter
OD
mean external diameter of the pipe barrel at any cross section

3.16
internal diameter
ID
mean internal diameter of the pipe barrel at any cross section

3.17
liquid applied roof waterproofing kit
LARWK
particular combination of a defined set of components to be installed in liquid form for roof waterproofing by application and/or incorporation and/or joining of the components in accordance with particular design methods

Note 1 to entry: The liquid applied watertight covering is usually a paste-like composite material or a combination of separate materials that can be poured, spread or sprayed on the subsurface by brush, roller or similar suitable applicator.

3.18
flexible sheet for waterproofing
factory made sheet for prevention of passage of water from the plane to another which can be rolled up or folded for easy transport to the site

Documents
Document Sharing Hub
Full document details: BS EN 1253-2:2015

3.19
untrafficked roof
roof consisting of the structural deck and all the layers on it, including waterproofing, insulation and a surface protective layer not designed for foot traffic above that required for maintenance

3.20
pedestrian access roof
roof consisting of the structural deck and all the layers on it, including waterproofing, insulation and a surface protective layer designed for foot traffic and gathering of people greater than that required for maintenance

3.21
green roof
roof consisting of the structural deck and all the layers on it, including waterproofing, insulation and a thin layer of growing medium planted with vegetation

3.22
roof garden
roof consisting of the structural deck and all the layers on it, including waterproofing, insulation and a substantial layer of growing medium planted with intensive vegetation and possibly paving

3.23
parking deck
roof consisting of the structural deck and all the layers on it, including waterproofing, insulation and a surface protective layer designed to withstand and distribute loads produced by the traffic associated with the parking of vehicles

3.24
nominal size
DN
numerical indication of size which is a convenient integer approximately equal to the internal diameter (DN/ID) or the external diameter (DN/OD) in millimetres

3.25
floor gully without trap
discharge fitting the top of which is a grating or cover capable of installation at ground or floor level intended to receive wastewater through apertures in the grating

Note 1 to entry: See Figure 4.

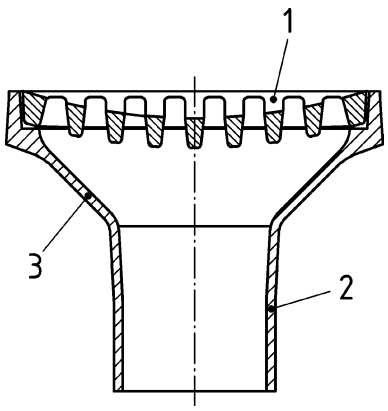

Key
1 grating
2 outlet
3 body

Figure 4 — Floor gully without trap (typical example)

Documents
Document Sharing Hub
Full document details: BS EN 1253-2:2015

3.26
wastewater
water composed of any combination of water discharged from domestic, industrial or commercial premises, surface run-off and accidentally any sewer infiltration water

[SOURCE: EN 16323:2014, 2.3.10.65]

3.27
surface water
water from precipitation, which has not seeped into the ground and is discharged to the drain or sewer system directly from the ground or from exterior building surfaces

[SOURCE: EN 16323:2014, 2.1.1.3]

3.28
clear opening
CO
diameter of the largest circle that can be inscribed within the unsupported area of the grating

3.29
test load
specified load which a component is required to withstand

3.30
outlet
male or female connection to the drainage pipe

4 Requirements

4.1 Design and construction

4.1.1 General

Roof drains and floor gullies shall be capable of being connected to the pipework system covered by relevant European Standards, and, when installed in accordance with the manufacturer's instructions, shall form an integral part of the building. There shall be no movement possible between the roof drain or floor gully and the floor or roof construction, which would impair the functioning of the installed roof drain or floor gully.

The upper surfaces of frame and grating shall be flush, except in untrafficked roof. When in position, it shall not be possible for gratings and covers to be dislodged from the frame, but they shall be easy to remove for maintenance and cleaning.

Roof drains and floor gullies shall be delivered with installation instructions.

All pipe joints to and from the roof drain or floor gully shall be designed to be watertight in accordance with EN 476.

4.1.2 Appearance

Internal and external surfaces shall be free from sharp edges and imperfections which could impair functioning of the gully or give risk of injury.

4.1.3 Apertures in gratings

Apertures can be holes or slots of any shape.

Documents
Document Sharing Hub
Full document details: BS EN 1253-2:2015

When measured in accordance with 5.1, the permissible aperture dimensions for gratings are given in Table 1.

Table 1 — Apertures in gratings

Class		Dimensions of apertures in gratings	
		Minimum width mm	**Maximum width** mm
H	1,5	4 [b]	15 (max. 8 mm in barefoot areas)
K	3	4 [b]	10 (max. 8 mm in barefoot areas)
L	15 [a]	4	15 (max. 8 mm in barefoot areas)
R	50 [a]	4	25 (max. 8 mm in barefoot areas)
M	125 [a]	4	25
N	250	4	25
P	400	4	25

[a] In commercially used premises, gratings may also be used with a maximum width of apertures up to 31 mm.
[b] Apertures of less than 4 mm width are permitted and shall not form part of the hydraulic tests.

Gratings for installation in untrafficked roof shall project not less than 30 mm above the roof covering. If the height of any subsequent surfacing cannot be specified, the grating shall project not less than 70 mm above the connecting surfaces.

NOTE If necessary, appropriate means can be provided to prevent the ingress of fine particles such as gravel into a roof drain.

4.2 Places of installation

4.2.1 General

A guide for selecting the class of roof drains and floor gullies appropriate to the place of installation is given below. The selection of the appropriate class is the responsibility of the specifier.

a) Class H 1,5: Untrafficked roof such as felt-and-gravel roofs, gravel fill roofs and similar.

b) Class K 3: Areas without vehicular traffic, such as dwellings, commercial and some public buildings.

c) Class L 15: Areas with light vehicular traffic such as in commercially used premises and public areas.

d) Class R 50: Areas with vehicular traffic, such as in commercially used premises and factories.

e) Class M 125: Areas with vehicular traffic, such as parking decks, factories and workshops.

f) Class N 250: Heavy duty industrial areas subject to fork lift traffic.

g) Class P 400: Extra-heavy duty applications where gullies are subjected to industrial fork lift trucks and/or where heavy vehicles are manoeuvring.

Classes E 600 and F 900 gully tops conforming to EN 124 may be used for all areas subject to special stresses such as exhibition halls, market halls, factory sheds and aircraft hangars.

Documents
Document Sharing Hub

Full document details: BS EN 1253-2:2015