BS EN 12881-1:2014

BSI Standards Publication

# Conveyor belts — Fire simulation flammability testing

## Part 1: Propane burner tests

bsi.

...making excellence a habit.™

Document Sharing Hub

## National foreword

This British Standard is the UK implementation of EN 12881-1:2014. It supersedes BS EN 12881-1:2005+A1:2008 which is withdrawn.

The UK participation in its preparation was entrusted to Technical Committee PRI/67, Conveyor belts.

A list of organizations represented on this committee can be obtained on request to its secretary.

This publication does not purport to include all the necessary provisions of a contract. Users are responsible for its correct application.

© The British Standards Institution 2014.
Published by BSI Standards Limited 2014

ISBN 978 0 580 78067 7
ICS 13.220.40; 53.040.20

**Compliance with a British Standard cannot confer immunity from legal obligations.**

This British Standard was published under the authority of the Standards Policy and Strategy Committee on 31 May 2014.

**Amendments issued since publication**

| Date | Text affected |
|---|---|

Documents
Document Sharing Hub

Full document details: BS EN 12881-1:2014

EUROPEAN STANDARD

NORME EUROPÉENNE

EUROPÄISCHE NORM

# EN 12881-1

May 2014

ICS 13.220.40; 53.040.20

Supersedes EN 12881-1:2005+A1:2008

English Version

# Conveyor belts - Fire simulation flammability testing - Part 1: Propane burner tests

Courroies transporteuses - Essais de simulation d'inflammation - Partie 1: Essais avec brûleur propane

Fördergurte - Brandtechnische Prüfungen - Teil 1: Prüfungen mit dem Propanbrenner

This European Standard was approved by CEN on 15 February 2014.

CEN members are bound to comply with the CEN/CENELEC Internal Regulations which stipulate the conditions for giving this European Standard the status of a national standard without any alteration. Up-to-date lists and bibliographical references concerning such national standards may be obtained on application to the CEN-CENELEC Management Centre or to any CEN member.

This European Standard exists in three official versions (English, French, German). A version in any other language made by translation under the responsibility of a CEN member into its own language and notified to the CEN-CENELEC Management Centre has the same status as the official versions.

CEN members are the national standards bodies of Austria, Belgium, Bulgaria, Croatia, Cyprus, Czech Republic, Denmark, Estonia, Finland, Former Yugoslav Republic of Macedonia, France, Germany, Greece, Hungary, Iceland, Ireland, Italy, Latvia, Lithuania, Luxembourg, Malta, Netherlands, Norway, Poland, Portugal, Romania, Slovakia, Slovenia, Spain, Sweden, Switzerland, Turkey and United Kingdom.

EUROPEAN COMMITTEE FOR STANDARDIZATION
COMITÉ EUROPÉEN DE NORMALISATION
EUROPÄISCHES KOMITEE FÜR NORMUNG

**CEN-CENELEC Management Centre: Avenue Marnix 17, B-1000 Brussels**

© 2014 CEN All rights of exploitation in any form and by any means reserved worldwide for CEN national Members.

Ref. No. EN 12881-1:2014 E

Documents
Document Sharing Hub

Full document details: BS EN 12881-1:2014

# Contents

Page

**Foreword** ..... 3
**Introduction** ..... 4
**1 Scope** ..... 5
**2 Normative references** ..... 5
**3 Propane gas supply** ..... 5
**4 Method A – Two metre single burner test** ..... 6
**4.1 Apparatus** ..... 6
**4.2 Preparation of test pieces** ..... 9
**4.3 Temperature at commencement of test** ..... 9
**4.4 Number of tests** ..... 9
**4.5 Procedure** ..... 9
**4.6 Termination of tests** ..... 10
**4.7 Measurement of damage to test pieces** ..... 10
**4.8 Test report** ..... 11
**5 Method B – Double burner test** ..... 12
**5.1 Apparatus** ..... 12
**5.2 Preparation of test pieces** ..... 13
**5.3 Temperature at commencement of test** ..... 13
**5.4 Number of tests** ..... 13
**5.5 Procedure** ..... 14
**5.6 Termination of tests** ..... 14
**5.7 Measurement of damage to test pieces** ..... 14
**5.8 Test report** ..... 15
**6 Method C – Mid-scale fire propagation test** ..... 15
**6.1 Apparatus** ..... 15
**6.2 Preparation of test pieces** ..... 23
**6.3 Installation of the test pieces and burner** ..... 23
**6.4 Temperature at commencement of test** ..... 23
**6.5 Number of tests** ..... 23
**6.6 Procedure** ..... 23
**6.7 Termination of tests** ..... 24
**6.8 Measurement of damage to test pieces** ..... 24
**6.9 Exhaust temperature calibration** ..... 25
**6.10 Test report** ..... 25
**7 Method D Laboratory scale Fire Propagation Test** ..... 26
**7.1 Apparatus** ..... 26
**7.2 Preparation of test pieces** ..... 27
**7.3 Installation of the test piece and burner** ..... 27
**7.4 Test Conditions** ..... 27
**7.5 Procedure** ..... 27
**7.6 Termination of tests** ..... 28
**7.7 Measurement of damage to test pieces** ..... 28
**7.8 Test report** ..... 28
**Annex ZA** (informative) **Relationship between this European Standard and the Essential Requirements of EU Directive 2006/42/EC** ..... 33
**Bibliography** ..... 34



Documents
Document Sharing Hub
Full document details: BS EN 12881-1:2014

# Foreword

This document (EN 12881-1:2014) has been prepared by Technical Committee CEN/TC 188 “Conveyor belts”, the secretariat of which is held by SNV.

This European Standard shall be given the status of a national standard, either by publication of an identical text or by endorsement, at the latest by November 2014 and conflicting national standards shall be withdrawn at the latest by November 2014.

Attention is drawn to the possibility that some of the elements of this document may be the subject of patent rights. CEN [and/or CENELEC] shall not be held responsible for identifying any or all such patent rights.

This document supersedes EN 12881-1:2005+A1:2008.

This document has been prepared under a mandate given to CEN by the European Commission and the European Free Trade Association, and supports essential requirements of EU Directive(s).

For relationship with EU Directive(s), see informative Annex ZA, which is an integral part of this document.

The main changes with respect to the previous edition are listed below:

— ‘Laboratory scale fire propagation test' was added (Method D);

— 'Mid-scale fire propagation test' (Method C, 6.1.1 Test gallery) thermal conductivity of the refractory material was included;

— 'Mid-scale fire propagation test' (Method C, 6.1.4 Gas burner) the diameter of the bore jets used was added.

According to the CEN-CENELEC Internal Regulations, the national standards organizations of the following countries are bound to implement this European Standard: Austria, Belgium, Bulgaria, Croatia, Cyprus, Czech Republic, Denmark, Estonia, Finland, Former Yugoslav Republic of Macedonia, France, Germany, Greece, Hungary, Iceland, Ireland, Italy, Latvia, Lithuania, Luxembourg, Malta, Netherlands, Norway, Poland, Portugal, Romania, Slovakia, Slovenia, Spain, Sweden, Switzerland, Turkey and the United Kingdom.



Documents
Document Sharing Hub
Full document details: BS EN 12881-1:2014

# Introduction

This European Standard is a type B1 standard as stated in EN ISO 12100.

The provisions of this European Standard may be supplemented or modified by a type C standard.

The machinery concerned and the extent to which hazards, hazardous situations and events are covered are indicated in the scope of this European Standard.

NOTE For machines which are covered by the scope of a type C standard and which have been designed and built according to the provisions of that standard, the provisions of that type C standard take precedence over the provisions of this type B1 standard.

The methods of test described in EN 12881-1 are intended to provide an indication of the reaction of a conveyor belt to a fire situation. However, in doing so attention is drawn to the fact that in assessing the overall flammability characteristics of conveyor belting for specific installations, it is not sufficient to rely solely on any single method of test but consideration has also to be given to the individual site location.

**WARNING — The tests described in** EN 12881-1 **can generate large amounts of smoke and heat. It is therefore essential to conduct the tests with caution, having due regard to health and safety considerations and to terminate any test immediately if at any time it is considered advisable to do so. In this regard it is recommended that no test should be supervised by only one person.**



Documents
Document Sharing Hub
Full document details: BS EN 12881-1:2014

## 1 Scope

EN 12881-1 describes four methods for measuring the propagation of a flame along a conveyor belt which has been exposed to a relatively high localized heat source such as a fire. The damage suffered by the conveyor belt, as well as its tendency to support combustion, is measured by observing the extent to which the fire spreads along the test piece.

Method A uses a test piece 2 m in length and consumes propane gas through the burner at the rate of (1,30 ± 0,05) kg per 10 min.

Method B uses a test piece 2,5 m in length and consumes propane gas through two burners mounted above and below the test piece trestle at the rate of (1,30 ± 0,05) kg per 10 min for each burner.

Method C uses a test piece 1,5 m in length and consumes propane gas through the burner at the rate of (565 ± 10) g per 50 min.

Method D uses a test piece 1,2 m in length and consumes propane gas through the burner at the rate of 150 l/hr (D1) or 190 l/hr (D2).

## 2 Normative references

The following documents, in whole or in part, are normatively referenced in this document and are indispensable for its application. For dated references, only the edition cited applies. For undated references, the latest edition of the referenced document (including any amendments) applies.

EN 10088-3, *Stainless steels — Part 3: Technical delivery conditions for semi-finished products, bars, rods, wire, sections and bright products of corrosion resisting steels for general purposes*

EN 22768-1, *General tolerances — Part 1: Tolerances for linear and angular dimensions without individual tolerance indications (ISO 2768-1)*

ISO 65, *Carbon steel tubes suitable for screwing in accordance with ISO 7-1*

ISO 9162, *Petroleum products — Fuels (class F) — Liquefied petroleum gases — Specifications*

## 3 Propane gas supply

The burners used in each method shall be supplied from bottled propane gas complying with ISO 9162 which shall be fed to each burner, using high pressure propane hose having a minimum internal diameter of 6,3 mm, either:

a) through a pressure reducing valve, a non-return valve and an orifice plate 1,7 mm thick with a 2,5 mm diameter hole; or

b) through a pressure reducing valve and a non-return valve followed by a flow meter calibrated to ensure that the correct mass of gas is consumed.

Before and during the test, immerse each gas cylinder to approximately two-thirds of its height in a bath of water at a temperature of (25 ± 3) °C. Ensure that each gas cylinder is not emptied at the end of a test by more than 90 % of its gas mass capacity.



Documents
Document Sharing Hub
Full document details: BS EN 12881-1:2014

# 4 Method A – Two metre single burner test

## 4.1 Apparatus

**4.1.1 Gallery** (see Figure 1) having a cross section not greater than 6 $m^2$, a height of not less than 1,9 m and not greater than 2,25 m and a width of not less than 1,9 m and not greater than 2,75 m through which air is drawn by an adjustable fan. The gallery shall have a concrete floor and shall be not less than 15,0 m long measured from the gallery entrance.

**4.1.2 Trestle** (see Figure 2) comprising a framework having internal dimensions 2,25 m long x 1,25 m wide and constructed of steel tubing complying with ISO 65, having a bore designation of DN 15 heavy series. The upper sides of the trestle frame shall be fitted with rod retainers to position and retain 15 steel bars manufactured from an austenitic chrome/nickel steel of an appropriate quality, such as 1.4310X10CrNi18-8 complying with EN 10088-3, resistant to rust, acid and heat. The bars shall be 10 mm diameter x 1,4 m in length and form the frame on which the belting rests. The upper surface of the bars shall be 350 mm from the floor.

**4.1.3 Burner**, constructed in accordance with Figure 3, comprising a square having side dimensions of (450 ± 9) mm and an overall height of (220 ± 5) mm. The burner shall be made of welded steel tube complying with ISO 65, having a bore designation of DN 15 medium or heavy series. The tubing shall have 52 holes, each having a diameter of (1,5 ± 0,1) mm, spaced at 50 mm intervals.

**4.1.4 Anemometer**, or other means of measuring the air velocity in the gallery, which shall be located at a height of 350 mm on the centreline of the gallery, at least 7,25 m inside the gallery entrance and 750 mm from the end of the trestle nearest the gallery entrance.

It is important that the air flow in the gallery is laminar and to this end equipment to assist in producing laminar flow may be used.

**4.1.5 Thermocouple**, to measure the temperature of the incoming air, located as shown in Figure 1.



Documents
Document Sharing Hub
Full document details: BS EN 12881-1:2014

Dimensions in millimetres

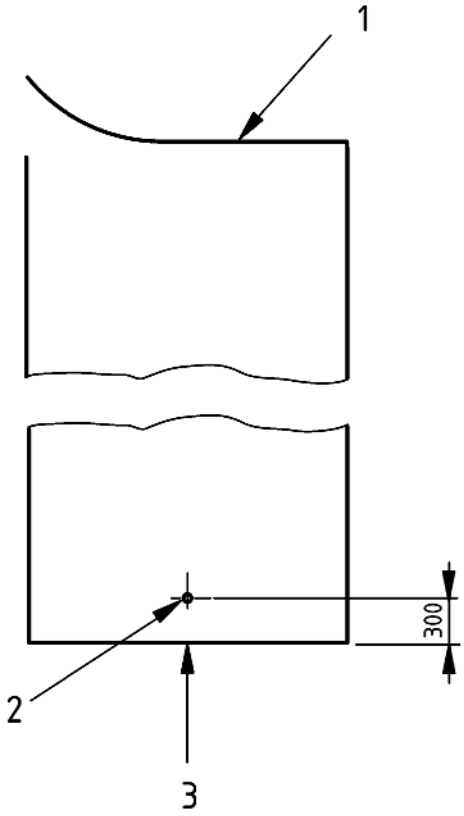


**a) Plan view of gallery**

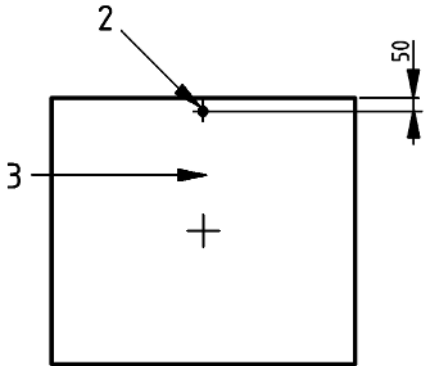


**b) Cross-section of front of gallery**

**Key**

1 rear of gallery
2 position of thermocouple on centre line
3 front of gallery

**Figure 1 — Location of thermocouple for measuring the temperature of incoming air**

General manufacturing tolerances shall be according to EN 22768-1, unless otherwise stated.



Documents
Document Sharing Hub
Full document details: BS EN 12881-1:2014

Dimensions in millimetres

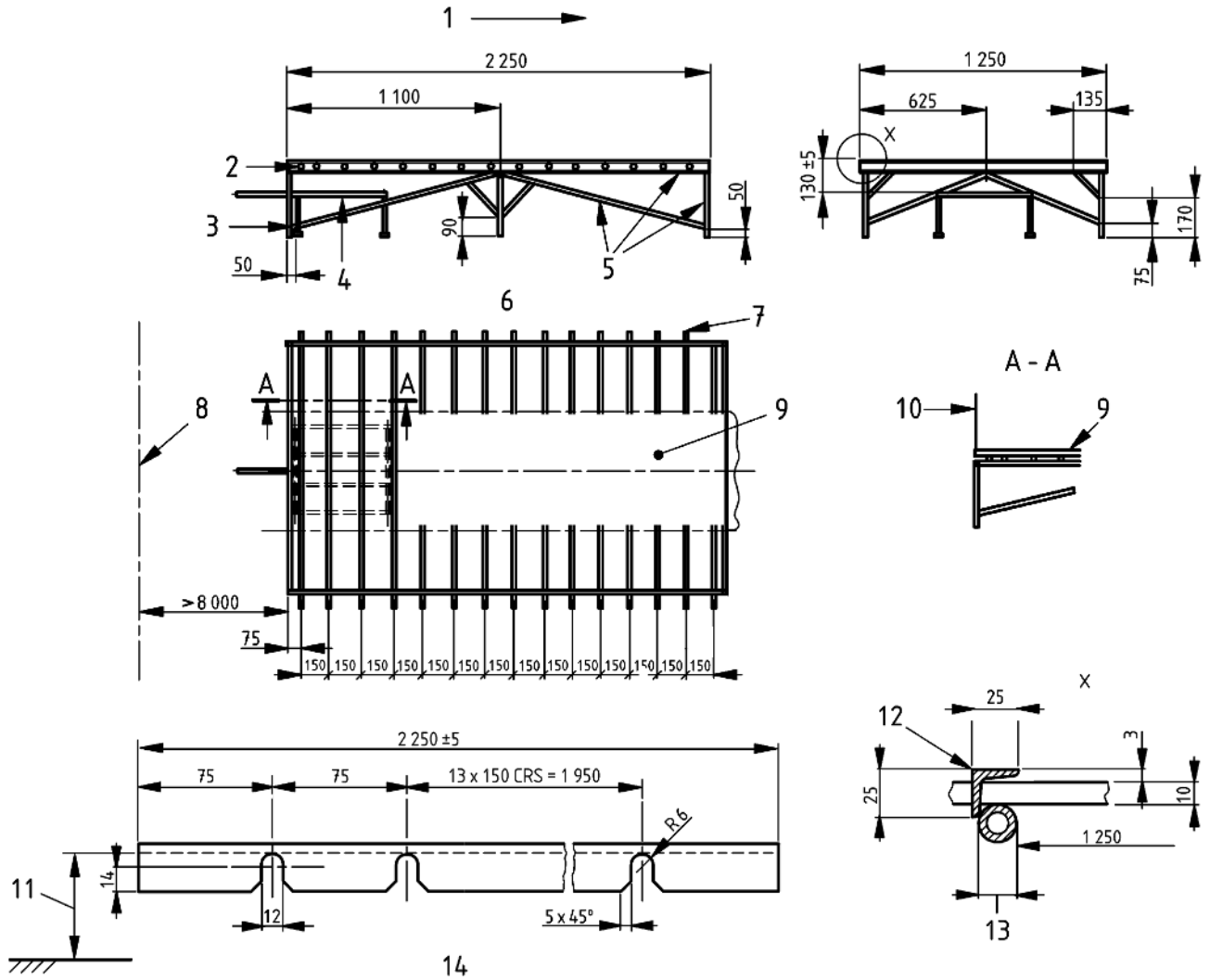


**Key**

| | | | |
|---|---|---|---|
| 1 | direction of air flow | 8 | gallery entrance |
| 2 | additional bar | 9 | test piece |
| 3 | to be clear of any cross bracing | 10 | edge of test piece flush with front of trestle |
| 4 | propane burner | 11 | 350 mm to flow line |
| 5 | DN 15 heavy series tube | 12 | rod retainers |
| 6 | detail of trestle | 13 | DN 15 heavy series trestle |
| 7 | bars made of austenitic chrome/nickel steel, diameter 10 mm, length 1,4 m | 14 | detail of rod retaining angle |

**Figure 2 — Propane burner trestle showing positions of burner and test piece**



Documents
Document Sharing Hub
Full document details: BS EN 12881-1:2014

Dimensions in millimetres

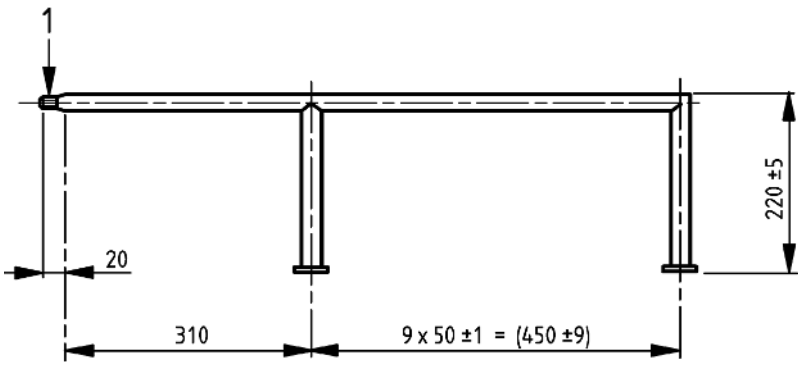


**a) Elevation**

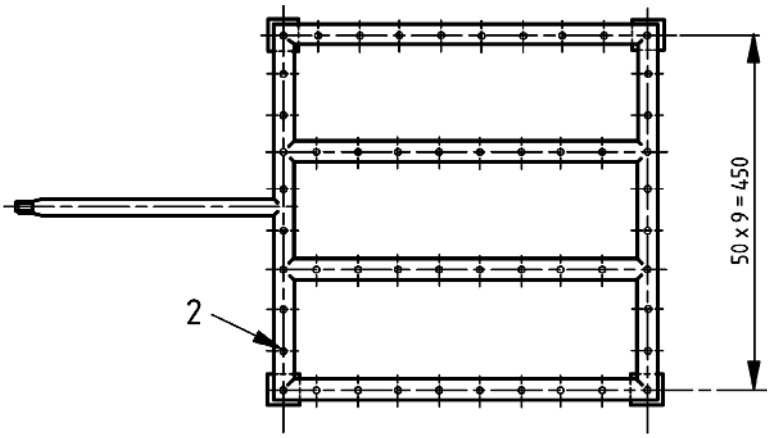


**b) Plan view**

**Key**

1 threaded

2 hole (x 52)

**Figure 3 — Burner for Method A**

## 4.2 Preparation of test pieces

Cut two test pieces, each 2 m long × 1 200 mm wide or of full width if the conveyor belt is less than 1 200 mm wide. Lay the test pieces out for 24 h in dry conditions at any ambient temperature above 0 °C immediately prior to testing to remove residual curvature.

## 4.3 Temperature at commencement of test

The ambient temperature at the commencement of the test shall be between 5 °C and 30 °C.

## 4.4 Number of tests

Carry out two tests, one on each side of the belt, so that both covers are tested.

## 4.5 Procedure

**4.5.1** Weigh the propane gas bottle prior to the test.

Documents
Document Sharing Hub



Full document details: BS EN 12881-1:2014

**4.5.2** Install the trestle (4.1.2) centrally on the longitudinal axis of the gallery (4.1.1) with the burner end facing the direction of the ventilation flow. The burner end of the trestle shall be at least 8 m from the gallery entrance.

**4.5.3** Place each test piece in turn centrally on the trestle with its transverse edge flush with the burner end of the trestle.

**4.5.4** Adjust the air current in the gallery to give an average velocity of (1,5 ± 0,1) m/s at a height of 350 mm. Take the measurement on the centreline of the trestle and at a distance of 750 mm from the end of the trestle nearest the gallery entrance (see Figure 1).

**4.5.5** Place the burner centrally with the four parallel burner tubes in line with the longitudinal axis of the test piece, and position it so that the distance from the top of the burner to the top of the bars on which the belt rests is (130 ± 5) mm, with the transverse end row of burner holes 50 mm inside the vertically projected transverse edge of the test piece. Light the burner and adjust the rate of gas consumption immediately to (1,30 ± 0,05) kg per 10 min.

The rate of gas consumption may be regulated by controlling the gas pressure at the high pressure side of the orifice plate to approximately 0,16 MPa for a gas consumption rate of 0,13 kg/min. The pressure reducing valve, the non-return valve and the orifice plate should be positioned as close to each other as possible. A sensitive precision pressure gauge should be used to monitor the pressure at the high pressure side of the orifice plate.

**4.5.6** After 10 min switch off the gas. Leave the test piece on the trestle until all flame and glowing have ceased (see also 4.6). However, terminate the test early if the extent of the fire appears to be a danger to persons or equipment.

**4.5.7** Re-weigh the gas bottle at the end of the test.

**4.5.8** Measure the damage to the test piece as described in 4.7.

## 4.6 Termination of tests

### 4.6.1 Normal termination

A test shall be terminated, and shall be deemed to be terminated normally, when a period of at least 10 min has elapsed after all flaming and glowing on the test piece and debris has ceased.

### 4.6.2 Premature termination

Any test terminated for safety reasons shall be deemed to be terminated prematurely and shall be recorded on the test report (see 4.8) as 'test terminated prematurely'.

## 4.7 Measurement of damage to test pieces

### 4.7.1 Criteria for assessment of damage

After testing and in order to determine, for the purposes of damage assessment, the length of the test piece which remains undamaged, any embrittlement or hardening, cracking, blistering or other blemishes not originally present shall be regarded as damage.



Documents
Document Sharing Hub
Full document details: BS EN 12881-1:2014