BS EN 12983-1:2023

BSI Standards Publication

Cookware — Domestic cookware for use on top of a stove, cooker or hob

Part 1: General requirements

Documents
Document Sharing Hub

Full document details: BS EN 12983-1:2023

National foreword

This British Standard is the UK implementation of EN 12983-1:2023. It supersedes BS EN 12983-1:2000+A1:2004, which is withdrawn.

The UK participation in its preparation was entrusted to Technical Committee CW/29, Tableware.

A list of organizations represented on this committee can be obtained on request to its committee manager.

Contractual and legal considerations

This publication has been prepared in good faith, however no representation, warranty, assurance or undertaking (express or implied) is or will be made, and no responsibility or liability is or will be accepted by BSI in relation to the adequacy, accuracy, completeness or reasonableness of this publication. All and any such responsibility and liability is expressly disclaimed to the full extent permitted by the law.

This publication is provided as is, and is to be used at the recipient's own risk.

The recipient is advised to consider seeking professional guidance with respect to its use of this publication.

This publication is not intended to constitute a contract. Users are responsible for its correct application.

© The British Standards Institution 2023
Published by BSI Standards Limited 2023

ISBN 978 0 539 12123 0

ICS 97.040.60

Compliance with a British Standard cannot confer immunity from legal obligations.

This British Standard was published under the authority of the Standards Policy and Strategy Committee on 28 February 2023.

Amendments/corrigenda issued since publication

Date	Text affected

Documents
Document Sharing Hub

EUROPEAN STANDARD

NORME EUROPÉENNE

EUROPÄISCHE NORM

EN 12983-1

February 2023

ICS 97.040.60

Supersedes EN 12983-1:2000, EN 12983-1:2000/A1:2004, EN 12983-1:2000/AC:2008

English Version

Cookware - Domestic cookware for use on top of a stove, cooker or hob - Part 1: General requirements

Articles culinaires - Articles culinaires à usage domestique pour cuisinières et plaques de cuisson - Partie 1 : Prescriptions générales

Kochgeschirre - Haushaltskochgeschirre zur Verwendung auf einem Herd oder Kochfeld - Teil 1: Allgemeine Anforderungen

This European Standard was approved by CEN on 9 January 2023.

CEN members are bound to comply with the CEN/CENELEC Internal Regulations which stipulate the conditions for giving this European Standard the status of a national standard without any alteration. Up-to-date lists and bibliographical references concerning such national standards may be obtained on application to the CEN-CENELEC Management Centre or to any CEN member.

This European Standard exists in three official versions (English, French, German). A version in any other language made by translation under the responsibility of a CEN member into its own language and notified to the CEN-CENELEC Management Centre has the same status as the official versions.

CEN members are the national standards bodies of Austria, Belgium, Bulgaria, Croatia, Cyprus, Czech Republic, Denmark, Estonia, Finland, France, Germany, Greece, Hungary, Iceland, Ireland, Italy, Latvia, Lithuania, Luxembourg, Malta, Netherlands, Norway, Poland, Portugal, Republic of North Macedonia, Romania, Serbia, Slovakia, Slovenia, Spain, Sweden, Switzerland, Türkiye and United Kingdom.

EUROPEAN COMMITTEE FOR STANDARDIZATION
COMITÉ EUROPÉEN DE NORMALISATION
EUROPÄISCHES KOMITEE FÜR NORMUNG

CEN-CENELEC Management Centre: Rue de la Science 23, B-1040 Brussels

© 2023 CEN All rights of exploitation in any form and by any means reserved worldwide for CEN national Members.

Ref. No. EN 12983-1:2023 E

Documents
Document Sharing Hub

Full document details: BS EN 12983-1:2023

Contents

Page

European foreword ... 5
1 Scope ... 6
2 Normative references ... 6
3 Terms and definitions ... 7
4 Materials ... 9
5 General conditions for testing ... 9
6 Construction ... 9
6.1 General ... 9
6.2 Geometry ... 9
7 Furniture ... 10
7.1 General ... 10
7.2 Selection of handles ... 10
7.3 Handle position with respect to cookware ... 11
7.4 Knob design ... 11
7.5 Lid design ... 11
7.6 Resistance to burning ... 11
7.7 Heat resistance ... 11
7.8 Torque resistance ... 11
7.9 Bending strength ... 12
7.10 Fatigue resistance ... 12
7.11 Resistance to pull off handle assembly ... 12
7.12 Thermal hazards ... 12
8 Coatings ... 12
8.1 Vitreous enamel and solgel on any substrate ... 12
8.2 Hard anodized aluminium ... 13
8.3 Organic external coatings ... 13
8.4 Interior non-stick coatings ... 14
9 Performance ... 14
9.1 Pouring ... 14
9.2 Base stability under shock conditions ... 14
9.3 Heat distribution ... 14
9.4 Suitability for use with various heat sources ... 15
10 Product information ... 16
10.1 Point of sale information ... 16
10.2 Care and use instructions – General instructions ... 16
Annex A (normative) Test for resistance to burning ... 17
A.1 Apparatus ... 17
A.2 Procedure ... 17
Annex B (normative) Test for heat resistance of furniture ... 18
B.1 Apparatus ... 18
B.2 Procedure ... 18

Documents
Document Sharing Hub
Full document details: BS EN 12983-1:2023

Annex C (normative) Test for resistance to torque 19
C.1 Apparatus 19
C.2 Procedure 19
Annex D (normative) Bending strength test 21
D.1 Apparatus 21
D.2 Procedure 21
Annex E (normative) Handle fatigue test 22
E.1 Apparatus 22
E.2 Procedure 23
Annex F (normative) Test for the insulating properties of furniture 24
F.1 Apparatus 24
F.2 Procedure 25
Annex G (normative) Adhesion test for vitreous enamel on aluminium 27
G.1 Principles 27
G.2 Reagents 27
G.3 Test specimens 27
G.4 Procedure 27
Annex H (normative) Resistance to staining of anodised coatings 28
H.1 Apparatus 28
H.2 Reagents 28
H.3 Procedure 28
Annex I (normative) Resistance to alkali of anodised aluminium 29
I.1 Apparatus 29
I.2 Reagents 29
I.3 Procedure 29
Annex J (normative) Pencil hardness test for exterior organic coatings 30
J.1 Apparatus 30
J.2 Procedure (ambient temperature test) 30
J.3 Procedure (elevated temperature test) 31
Annex K (normative) Pouring test 32
K.1 Apparatus 32
K.2 Procedure 32
Annex L (normative) Base stability under shock conditions 33
L.1 Apparatus 33
L.2 Procedure 33

Documents
Document Sharing Hub

Full document details: BS EN 12983-1:2023

Annex M (normative) Test for resistance to pull 35
M.1 Apparatus 35
M.2 Procedure 35
Annex N (normative) Suitability of non-stick coatings 37
N.1 Apparatus 37
N.2 Test batter 38
N.3 Procedure 38
N.4 Rating of the pancake release 40
Annex O (normative) Corrosion resistance of non-stick surfaces 41
O.1 General 41
O.2 Procedure 41
Annex P (normative) Heat distribution 42
P.1 Apparatus 42
P.2 Materials 42
P.3 Procedure 42
Annex Q (normative) Suitability for gas burner and electric radiant ring and solid plate 44
Q.1 Apparatus 44
Q.2 Procedure 46
Annex R (normative) Suitability for glass ceramic hob with radiant or halogen heaters 47
R.1 Apparatus 47
R.2 Procedure 47
Bibliography 49

Documents
Document Sharing Hub
Full document details: BS EN 12983-1:2023

European foreword

This document (EN 12983-1:2023) has been prepared by Technical Committee CEN/TC 194 “Utensils in contact with food”, the secretariat of which is held by AFNOR.

This European Standard shall be given the status of a national standard, either by publication of an identical text or by endorsement, at the latest by August 2023, and conflicting national standards shall be withdrawn at the latest by August 2023.

Attention is drawn to the possibility that some of the elements of this document may be the subject of patent rights. CEN shall not be held responsible for identifying any or all such patent rights.

This document supersedes EN 12983-1:2000, EN 12983-1:2000/A1:2004 and EN 12983-1:2000/AC:2008.

The main changes compared to the previous edition are listed below:

— revision of requirements and associated tests for:

  — handles;

  — coating;

  — heat suitability;

  — heat distribution;

— inclusion of requirements of CEN/TS 12983-2:2005 (except requirements for ceramic).

Any feedback and questions on this document should be directed to the users’ national standards body. A complete listing of these bodies can be found on the CEN website.

According to the CEN-CENELEC Internal Regulations, the national standards organisations of the following countries are bound to implement this European Standard: Austria, Belgium, Bulgaria, Croatia, Cyprus, Czech Republic, Denmark, Estonia, Finland, France, Germany, Greece, Hungary, Iceland, Ireland, Italy, Latvia, Lithuania, Luxembourg, Malta, Netherlands, Norway, Poland, Portugal, Republic of North Macedonia, Romania, Serbia, Slovakia, Slovenia, Spain, Sweden, Switzerland, Türkiye and the United Kingdom.

Documents
Document Sharing Hub
Full document details: BS EN 12983-1:2023

1 Scope

This document specifies safety and performance requirements for items of cookware for domestic use on top of a stove, cooker or hob. It is applicable to all cookware regardless of material or method of manufacture. It is also applicable to cookware intended for use both “on top” and “in oven”.

Hob types covered by this document are gas, electric solid plate, electric radiant ring, radiant plate in glass ceramic and induction plate in glass ceramic.

This document is not applicable to pressure cookers, stove top water kettles and coffee makers.

NOTE 1 Requirements for suitability for use in automatic dishwashers are under study by a specialist group and will be added by amendment when completed.

NOTE 2 The requirements for ceramic and glass ceramic are specified in Part 2.

NOTE 3 The additional requirements for cookware for use on induction heating sources are specified in Part 3.

2 Normative references

The following documents are referred to in the text in such a way that some or all of their content constitutes requirements of this document. For dated references, only the edition cited applies. For undated references, the latest edition of the referenced document (including any amendments) applies.

EN 30-1-1, *Domestic cooking appliances burning gas - Part 1-1: Safety - General*

EN 60350-2, *Household electric cooking appliances - Part 2: Hobs - Methods for measuring performance*

EN ISO 2064, *Metallic and other inorganic coatings - Definitions and conventions concerning the measurement of thickness (ISO 2064)*

EN ISO 2360, *Non-conductive coatings on non-magnetic electrically conductive base metals - Measurement of coating thickness - Amplitude-sensitive eddy-current method (ISO 2360)*

EN ISO 2409:2020, *Paints and varnishes - Cross-cut test (ISO 2409:2020)*

EN ISO 4628-2, *Paints and varnishes - Evaluation of degradation of coatings - Designation of quantity and size of defects, and of intensity of uniform changes in appearance - Part 2: Assessment of degree of blistering (ISO 4628-2)*

EN ISO 28706-1, *Vitreous and porcelain enamels - Determination of resistance to chemical corrosion – Part 1: Determination of resistance to chemical corrosion by acids at room temperature (ISO 28706-1)*

EN ISO 28706-2:2017, *Vitreous and porcelain enamels - Determination of resistance to chemical corrosion - Part 2: Determination of resistance to chemical corrosion by boiling acids, boiling neutral liquids, alkaline liquids and/or their vapours (ISO 28706-2:2017)*

ISO 2747, *Vitreous and porcelain enamels — Enamelled cooking utensils — Determination of resistance to thermal shock*

ISO 4532, *Vitreous and porcelain enamels — Determination of the resistance of enamelled articles to impact — Pistol test*

ISO 10093, *Plastics — Fire tests — Standard ignition sources*

Documents
Document Sharing Hub
Full document details: BS EN 12983-1:2023

3 Terms and definitions

For the purposes of this document, the following terms and definitions apply.

ISO and IEC maintain terminology databases for use in standardization at the following addresses:

— IEC Electropedia: available at https://www.electropedia.org/

— ISO Online browsing platform: available at https://www.iso.org/obp

3.1
cookware
utensil, in the form of a hollow container, intended for use in the cooking of food or liquids on the top of a stove, cooker or hob, and/or in an oven

3.2
fixing system
attachment method, or methods, utilized in fastening a handle to the body of an item of cookware or to fix a knob to a lid

3.3
capacity
maximum volume of water which can be held by the article on a level surface

Note 1 to entry: 0,1 % (mass fraction) of hand wash detergent shall be added to the water in order to minimize the surface tension.

3.4
usable capacity
two thirds of the capacity

Note 1 to entry: The true usable capacity of the cookware varies with the food being cooked. The figure given here is an average value intended for use in test situations only and not as information to the consumer.

3.5
handle
projection integral with or affixed to the body of the cookware and intended to facilitate the carrying and holding of the article in normal use

3.6
knob
short projection integral with or affixed to the lid of the cookware to facilitate positioning or removal in normal use

3.7
shallow item
cookware of overall internal depth 1/3 or less of the interior diameter at the rim

3.8
furniture
handles and knobs

Documents
Document Sharing Hub

Full document details: BS EN 12983-1:2023

3.9
non-stick coating
coating applied to the interior of a cookware to achieve an anti-adherent effect during cooking and facilitate cleaning

3.10
exterior base diameter
dimension, measured on the exterior bottom of the cookware, across the maximum circumference of contact when placed on a flat surface

3.11
interior base diameter
diameter, measured on the inside of the cookware, excluding the radius of the body base to the body wall

3.12
glass
inorganic non-metallic material produced by the complete fusion of raw materials at a high temperature into a homogeneous liquid which is then cooled to a rigid condition essentially without crystallisation

3.13
ceramic
inorganic non-metallic material made by firing a mixture of raw materials at high temperature

Note 1 to entry: The firing temperature is high enough to give the necessary strength to the article, which is already shaped but is lower than the temperature which is necessary to achieve complete fusion of the mixture.

3.14
glass ceramic
inorganic, non-metallic material produced by the complete fusion of raw materials at high temperatures into a homogeneous liquid which is then cooled to a rigid material and heat treated to achieve a certain degree of crystallisation, mainly sub-microscopic small crystallites

3.15
organic coating
kind of polymer coating whose main or primary ingredients are based on compound from organic chemistry

3.16
ceramic coating
also nominated as sol-gel coating is an inorganic, non-metallic solid and inert film

Note 1 to entry: Mainly composed of silica and can contain some organic substances.

3.17
hard substrate
main material of the body shape

EXAMPLES Aluminium, cast iron, steel.

3.18
concavity
difference of the height between the outside base diameter and the outside base centre of the product

Documents
Document Sharing Hub
Full document details: BS EN 12983-1:2023

4 Materials

Cookware shall be made of materials of a type and purity that, under normal conditions of use, present no toxic hazards nor in any way affect the organoleptic qualities of food prepared in it.

NOTE There are European regulations in force regarding products intended to be used in contact with foodstuffs.

5 General conditions for testing

Unless otherwise specified, the tests shall be carried out at an ambient temperature of (23 ± 5) °C.

When a failure in a test could be caused by the stresses set up by a previous test, the failed test shall be repeated on a new product.

6 Construction

6.1 General

6.1.1 Stability

The product shall be stable (i.e. shall not tilt), the base shall be in intended contact with the surface (a slide could be accepted), when placed empty without lid on a (5 ± 0,5)° inclined surface in the least favourable position.

6.1.2 Hygiene

All surfaces intended to come into contact with food shall be easily cleanable under normal circumstances.

6.1.3 Mechanical hazards

All components shall be free from burrs, splinters or sharp edges that could cause injury or discomfort to the user.

6.2 Geometry

6.2.1 Dimensions

The points of measurement of any claimed dimensions shall be made clear to the consumer, e.g. by means of a simple sketch.

6.2.2 Capacity

If a capacity is claimed, the actual capacity shall be equal or greater than the claimed capacity, when measured with an accuracy of 0,05 l.

6.2.3 Diameters

Any diameter claimed for the base shall be within ±10 mm of the average of two measurements of the actual diameter taken at right angles to one another.

Any other claimed diameter shall be within ±5 mm of the average of two measurements of the actual diameter taken at right angles to one another.

6.2.4 Sizes for non-circular products

Every claimed size shall be within tolerance of ±10 mm.

AVA Documents
Document Sharing Hub

Full document details: BS EN 12983-1:2023

6.2.5 Base thickness

If a thickness is claimed for the base of a product, the average thickness of the base shall be greater than 85 % of the claimed thickness. The average thickness shall be calculated, by taking the average of the 8 points measured as described in Figure 1.

If more than 22 % of the base area is deliberately deformed for aesthetic or functional reasons, either internally or externally, no claim for base thickness shall be made.

Dimensions in millimetres

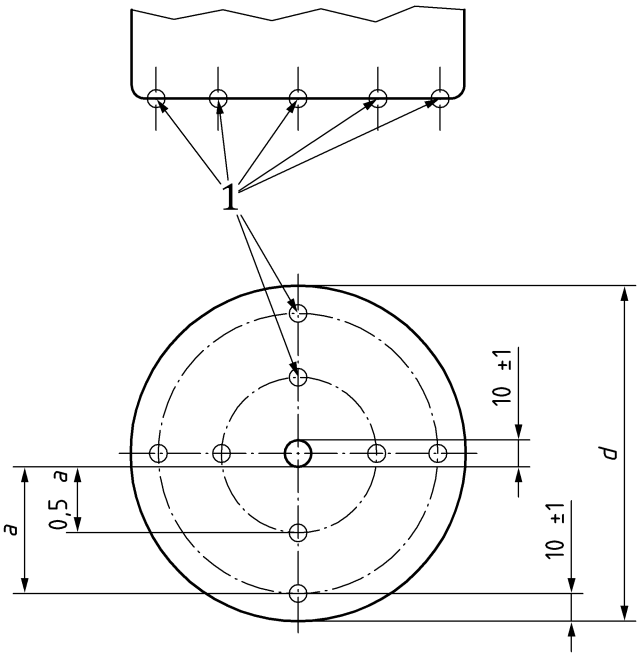

Key

1 measuring points

d base diameter

Figure 1 — Measuring points

6.2.6 Base form

The base, when viewed from the beneath, shall not be convex except for products whose intrinsic design features preclude them complying with this requirement, e.g. certain woks.

7 Furniture

7.1 General

It is not the intention that all these tests shall be passed in sequence. Except where otherwise stated each test shall stand alone.

7.2 Selection of handles

All cookware with a capacity greater than 3,75 l or a total weight of 5 kg when filled to capacity with water shall be fitted with two handles.

Documents
Document Sharing Hub
Full document details: BS EN 12983-1:2023

7.3 Handle position with respect to cookware

Handles shall be positioned above the centre of gravity of an item of cookware when filled with water to its capacity. For shallow items there shall be a minimum clearance of 30 mm between the handle and the horizontal projection of the base of the item of cookware at a point halfway along the handle assembly. In the case of side handles, the measurement is taken at the lowest point where they are held in normal use (see Figure 2).

Dimensions in millimetres

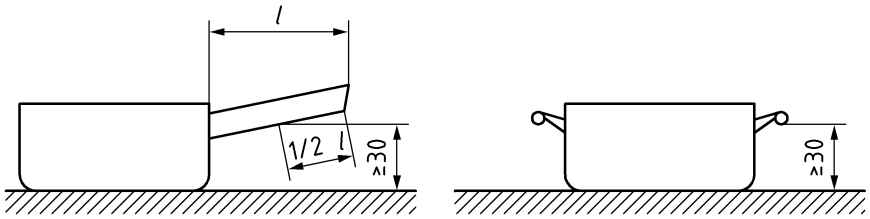

Figure 2 — Handle position

7.4 Knob design

It shall be possible to use the knob for its normal purposes without coming into contact with any surface whose temperature exceeds the values given in 7.12 for the relevant materials.

7.5 Lid design

The design of the lid shall be such that it shall be possible to remove it from the body using a force equal to the weight of the lid + 2 N in any position at a temperature of (23 ± 5) °C. This test shall be carried out both before and after bringing a quantity of water, equal to the usable capacity, to the boil and allowing it to cool to ambient temperature. The lid shall remain in place throughout the boiling and cooling stages. If the lid is fitted with a locking device, this test shall be carried out with the device disengaged.

NOTE For glass lid thermal resistance, see EN 12983-2:2023, Clause 5.

7.6 Resistance to burning

The underside of the handle or any insert or inlay there, consisting of organic material, shall not drip molten material or keep burning when tested according to Annex A. Any burning shall self-extinguish within 15 s of the removal of the flame. Once extinguished the handle material shall not spontaneously re-ignite. Each material shall be tested at its position.

7.7 Heat resistance

All furniture designed to be attached to the main body of a product shall be free from cracks and blisters after completion of the test described in Annex B for a temperature of (150 ± 5) °C for 1 h. Purely decorative features, e.g. thermoplastic inlays or sleeves, are exempt from this requirement.

7.8 Torque resistance

When tested in accordance with Annex C, the movement of the handle shall be no more than 10° in either direction. There shall be no damage affecting the function caused to the handle, ferrule or fixing system by this test.

Documents
Document Sharing Hub

Full document details: BS EN 12983-1:2023

7.9 Bending strength

No part of the handle or handle fixing system shall detach or break with a bending force of 100 N when tested as described in Annex D during 30 s.

7.10 Fatigue resistance

A handle assembly shall withstand 15 000 cycles, without permanent deformation or permanent loosening of the handle or its fixing system, when tested as described in Annex E. If any loosening of the handle is noticed it is acceptable to retighten as mentioned in the use and care manual. Distortion of less than 5 % of the handle length measured at the end of the handle is ignored unless it affects safety or function.

7.11 Resistance to pull off handle assembly

When tested as described in Annex M, a handle assembly shall withstand a dynamic impact of 1,5 Nm without any breakage nor reduction in the security of the handle nor the fixing system.

7.12 Thermal hazards

For the following materials, the maximum temperature shall not exceed:

a) metal 55 °C;

b) plastics 70 °C;

c) wood 89 °C;

d) ceramic, glass, stone 66 °C

when tested as described in Annex F.

If the values exceed these limits or the cookware is claimed to be suitable for deepfrying, the manufacturer shall indicate in the instructions (see 10.2) that the use of protection is required in order to ensure a safe handling of the cookware.

It shall not be possible to touch, with a spherical probe 14 mm in diameter, any metal part contained within the insulated portion of the furniture which exceeds 55 °C when tested as described in Annex F.

8 Coatings

8.1 Vitreous enamel and solgel on any substrate

8.1.1 Citric acid test at room temperature

When the interior enamel coat is tested in accordance with EN ISO 28706-2:2017, Clause 11, the maximum acceptable weight loss shall be 5,0 g/m^2 for the liquid phase and 10,0 g/m^2 for the vapour phase. The interior coating shall be tested in accordance with EN ISO 28706-1. For matte and glossy surfaces, the result is considered as successful if the sample is in class AA, A+.

8.1.2 Boiling water test

When the interior enamel coat is tested in accordance with EN ISO 28706-2:2017, Clause 14, the maximum acceptable weight loss shall be 1,5 g/m^2 for the liquid phase and 4,5 g/m^2 for the vapour.

8.1.3 Thermal shock test

When the coating is tested in accordance with ISO 2747, the minimum acceptable failure temperature shall be 280 °C.

Documents
Document Sharing Hub
Full document details: BS EN 12983-1:2023

8.1.4 Resistance to impact

When the coating is tested in accordance with ISO 4532, the coating shall resist a minimum impact of 20 N, showing no damage greater than 2 mm after 24 h.

8.1.5 Adhesion test for vitreous enamel on aluminium

When tested as described in Annex G, exposure of the base metal shall not exceed 3 mm from the test edge.

8.2 Hard anodized aluminium

8.2.1 Thickness

The minimum average thickness of an anodised layer shall be 25 µm when measured as specified in EN ISO 2064 and EN ISO 2360.

This check shall be carried out only where the hard anodised coating is not covered by a separate coat of a different material.

8.2.2 Stain resistance

When tested as described in Annex H, there shall be no staining visible on any surface intended to come into contact with food.

8.2.3 Alkali resistance

When tested as described in Annex I, there shall be no loss of the insulating properties of the coating of any surface intended to come into contact with food.

8.2.4 Hardness

Coatings claimed to be hard anodised shall have a hardness greater than 350 HV 0,5 or equivalent.

8.3 Organic external coatings

8.3.1 Cross-cut adhesion test

There shall be no removal of the coating greater than classification 2 when tested as described in EN ISO 2409:2020 for hard substrates, with the following modifications:

a) precondition the sample by immersing in continuously boiling water for 15 min, allowing it to cool at ambient temperature and wiping it dry;

b) repeat the test method described in A.2 of EN ISO 2409:2020 a further 3 times applying the tape at 90° to the previous application each time. The tape used shall have an adhesion performance from 360 cN/Cm to 440 cN/Cm.

8.3.2 Pencil hardness test

When tested on the base as described in Annex J, the minimum acceptable hardness shall be 2 H.

8.3.3 Pencil hardness test at elevated temperatures

When tested on the base (bottom) as described in Annex J, with the test surface held at 200 °C, the minimum acceptable hardness shall be H.

Extreme care should be taken in carrying out this test to avoid burns. Tests 8.3.2 and 8.3.3 are applicable only in case of flat surface.

Documents
Document Sharing Hub

Full document details: BS EN 12983-1:2023

8.4 Interior non-stick coatings

8.4.1 General

The requirements given in this clause apply to any surfaces which are claimed to be non-stick.

8.4.2 Cross-cut adhesion test on organic coating

There shall be no removal of the coating greater than classification 2 when tested as described in EN ISO 2409:2020 for hard substrates, with the following modifications:

1) precondition the test piece by immersing in continuously boiling water for 15 min, allowing it to cool at ambient temperature and wiping it dry;

2) repeat the test method described in A.2 of EN ISO 2409:2020 a further 3 times applying the tape at 90° to the previous application each time. The tape used shall have an adhesion performance from 360 cN/Cm to 440 cN/Cm.

8.4.3 Non-stick performance

When tested as described in Annex N, any surface claimed to be non-stick shall still have acceptable pancake release over 5 cooking cycles and shall not show wear through of the coating.

Acceptable pancake release means all food is released with a spatula with some effort (minimum requirement 50 points on all 5 tests).

8.4.4 Corrosion resistance

When tested as described in Annex O, any surface claimed to be non-stick shall show no blistering exceeding size 2 density 2 according to EN ISO 4628-2.

9 Performance

9.1 Pouring

When tested as described in Annex K, the liquid shall flow cleanly from the rim. There shall be no continuous dribbling, but individual droplets may flow back on to the sidewall.

Items of cookware provided with a pouring lip shall be tested to satisfy this requirement only at the pouring lip.

Shallow products, e.g. frypans and omelette pans, shall only be tested if they are provided with a pouring lip.

9.2 Base stability under shock conditions

When tested as described in Annex L, the base shall not become convex.

9.3 Heat distribution

When tested as described in Annex P, the temperature at the point where the sugar first melted (190 °C) shall not exceed 290 °C at the completion of the test.

An infrared camera could be used instead of the sugar. In this case, the point which first reaches a temperature of 190 °C shall not exceed a temperature of 290°C when the minimum temperature over the entire interior base reaches 190 °C.

Documents
Document Sharing Hub

Full document details: BS EN 12983-1:2023