BS EN 13209-1:2022

BSI Standards Publication

Child care articles — Child carriers — Safety requirements and test methods

Part 1: Framed back carrier

Documents
Document Sharing Hub

Full document details: BS EN 13209-1:2022

National foreword

This British Standard is the UK implementation of EN 13209-1:2022. It supersedes BS EN 13209-1:2021, which is withdrawn.

The UK participation in its preparation was entrusted to Technical Committee CW/1, Safety of child use and child care products.

A list of organizations represented on this committee can be obtained on request to its committee manager.

Contractual and legal considerations

This publication has been prepared in good faith, however no representation, warranty, assurance or undertaking (express or implied) is or will be made, and no responsibility or liability is or will be accepted by BSI in relation to the adequacy, accuracy, completeness or reasonableness of this publication. All and any such responsibility and liability is expressly disclaimed to the full extent permitted by the law.

This publication is provided as is, and is to be used at the recipient's own risk.

The recipient is advised to consider seeking professional guidance with respect to its use of this publication.

This publication is not intended to constitute a contract. Users are responsible for its correct application.

© The British Standards Institution 2022
Published by BSI Standards Limited 2022

ISBN 978 0 539 25276 7

ICS 97.190

Compliance with a British Standard cannot confer immunity from legal obligations.

This British Standard was published under the authority of the Standards Policy and Strategy Committee on 31 December 2022.

Amendments/corrigenda issued since publication

Date	Text affected

Documents
Document Sharing Hub

Full document details: BS EN 13209-1:2022

EUROPEAN STANDARD

NORME EUROPÉENNE

EUROPÄISCHE NORM

EN 13209-1

May 2022

ICS 97.190

Supersedes EN 13209-1:2021

English Version

Child care articles - Child carriers - Safety requirements and test methods - Part 1: Framed back carrier

Articles de puériculture - Porte-enfants - Exigences de sécurité et méthodes d'essai - Partie 1 : Porte-enfants dorsaux à armature

Artikel für Säuglinge und Kleinkinder - Kindertragen - Sicherheitstechnische Anforderungen und Prüfverfahren - Teil 1: Rückentragen mit Gestell

This European Standard was approved by CEN on 15 March 2022.

CEN members are bound to comply with the CEN/CENELEC Internal Regulations which stipulate the conditions for giving this European Standard the status of a national standard without any alteration. Up-to-date lists and bibliographical references concerning such national standards may be obtained on application to the CEN-CENELEC Management Centre or to any CEN member.

This European Standard exists in three official versions (English, French, German). A version in any other language made by translation under the responsibility of a CEN member into its own language and notified to the CEN-CENELEC Management Centre has the same status as the official versions.

CEN members are the national standards bodies of Austria, Belgium, Bulgaria, Croatia, Cyprus, Czech Republic, Denmark, Estonia, Finland, France, Germany, Greece, Hungary, Iceland, Ireland, Italy, Latvia, Lithuania, Luxembourg, Malta, Netherlands, Norway, Poland, Portugal, Republic of North Macedonia, Romania, Serbia, Slovakia, Slovenia, Spain, Sweden, Switzerland, Turkey and United Kingdom.

EUROPEAN COMMITTEE FOR STANDARDIZATION
COMITÉ EUROPÉEN DE NORMALISATION
EUROPÄISCHES KOMITEE FÜR NORMUNG

CEN-CENELEC Management Centre: Rue de la Science 23, B-1040 Brussels

© 2022 CEN All rights of exploitation in any form and by any means reserved worldwide for CEN national Members.

Ref. No. EN 13209-1:2022 E

Documents
Document Sharing Hub

Full document details: BS EN 13209-1:2022

Contents

Page

European foreword 4
1 Scope 5
2 Normative references 5
3 Terms and definitions 5
4 Test equipment 6
4.1 Small parts cylinder 6
4.2 Feeler gauge 6
4.3 Test torso 6
4.4 Test masses and dummy 8
4.4.1 Test mass A 8
4.4.2 Test mass B 8
4.4.3 Test mass C 8
4.4.4 Test mass D 8
4.4.5 Test dummy 8
4.5 Test platform 9
4.6 Test probes for finger entrapment 9
4.6.1 Finger probe with hemispherical end 9
4.6.2 Finger probe for mesh 10
4.6.3 Shape assessment probe 10
5 General requirements 11
5.1 Order of tests 11
5.2 Test conditions 11
5.3 Tolerances 11
6 Chemical hazards 12
6.1 Migration of certain elements 12
6.2 Formaldehyde 12
7 Thermal hazards 12
7.1 General 12
7.2 Flammability 13
7.2.1 Requirements 13
7.2.2 Test methods 13
8 Mechanical hazards 13
8.1 Entrapment of fingers 13
8.1.1 Requirement 13
8.1.2 Test method 13
8.2 Edges, projections and corners 13
8.3 Choking and ingestion hazards 14
8.3.1 Requirements 14
8.3.2 Test methods 14
8.4 Entanglement hazards 15
8.4.1 Requirements 15
8.4.2 Test methods 15
8.5 Stability 17
8.5.1 Requirements 17

Documents
Document Sharing Hub

Full document details: BS EN 13209-1:2022

8.5.2 Test method ... 17
8.6 Protective function ... 17
8.6.1 Child restraint system ... 17
8.6.2 Carer's attachment system ... 18
8.6.3 Structural integrity ... 18
9 Suffocation hazards from packaging materials ... 18
10 Product information ... 19
10.1 General ... 19
10.2 Purchase information ... 19
10.3 Marking ... 19
10.4 Instructions for use ... 19
10.4.1 Warnings ... 19
10.4.2 Additional information ... 20
Annex A (normative) Warnings ... 21
Annex B (informative) Rationales ... 26
B.1 General ... 26
B.2 Chemical hazards ... 26
B.3 Thermal hazards ... 26
B.4 Mechanical hazards ... 26
B.4.1 General ... 26
B.4.2 Entrapment of fingers ... 26
B.4.3 Choking and ingestion hazards ... 26
B.4.4 Entanglement hazards ... 27
B.4.5 Protective function ... 27
B.5 Suffocation hazards ... 27
Bibliography ... 28

Documents
Document Sharing Hub
Full document details: BS EN 13209-1:2022

European foreword

This document (EN 13209-1:2022) has been prepared by Technical Committee CEN/TC 252 “Child care articles”, the secretariat of which is held by AFNOR.

This European Standard shall be given the status of a national standard, either by publication of an identical text or by endorsement, at the latest by November 2022, and conflicting national standards shall be withdrawn at the latest by November 2022.

Attention is drawn to the possibility that some of the elements of this document may be the subject of patent rights. CEN shall not be held responsible for identifying any or all such patent rights.

This document supersedes EN 13209-1:2021.

This document has been prepared under a Standardization Request given to CEN by the European Commission and the European Free Trade Association.

Any feedback and questions on this document should be directed to the users’ national standards body. A complete listing of these bodies can be found on the CEN website.

According to the CEN-CENELEC Internal Regulations, the national standards organisations of the following countries are bound to implement this European Standard: Austria, Belgium, Bulgaria, Croatia, Cyprus, Czech Republic, Denmark, Estonia, Finland, France, Germany, Greece, Hungary, Iceland, Ireland, Italy, Latvia, Lithuania, Luxembourg, Malta, Netherlands, Norway, Poland, Portugal, Republic of North Macedonia, Romania, Serbia, Slovakia, Slovenia, Spain, Sweden, Switzerland, Turkey and the United Kingdom.

Documents
Document Sharing Hub

Full document details: BS EN 13209-1:2022

1 Scope

This document specifies the safety requirements and test methods for child back carriers with framed support to carry a child in a seated position. Framed back carriers are intended for children from 6 months of age up to a maximum weight of 18 kg and are designed to carry the child on the carer's back and be attached to a carer's torso allowing a hands-free operation, e.g. standing, walking.

NOTE The rationales for the inclusion of some of the requirements given in this document are given in Annex B.

This document does not cover framed back carriers designed for children with special needs.

If the framed back carrier has other functions not covered in this document, reference should be made to the relevant European Standard.

2 Normative references

The following documents are referred to in the text in such a way that some or all of their content constitutes requirements of this document. For dated references, only the edition cited applies. For undated references, the latest edition of the referenced document (including any amendments) applies.

EN 71-2:2020, *Safety of toys — Part 2: Flammability*

EN 71-3, *Safety of toys — Part 3: Migration of certain elements*

EN ISO 14184-1, *Textiles — Determination of formaldehyde — Part 1: Free and hydrolysed formaldehyde (water extraction method) (ISO 14184-1)*

3 Terms and definitions

For the purposes of this document, the following terms and definitions apply.

ISO and IEC maintain terminological databases for use in standardization at the following addresses:

— ISO Online browsing platform: available at https://www.iso.org/obp

— IEC Electropedia: available at https://www.electropedia.org/

3.1
framed back carrier
product with a framed support designed to carry the child on the carer's back and to be attached to the carer's torso

3.2
freestanding framed back carrier
framed back carrier designed to stand unsupported

3.3
carer's attachment system
fastenings, straps and/or belts or similar parts which are fitted to the framed back carrier for the purpose of securing the product to the carer's torso

3.4
child restraint system
system incorporated into the framed back carrier in order to retain the child in the product

Documents
Document Sharing Hub
Full document details: BS EN 13209-1:2022

4 Test equipment

4.1 Small parts cylinder

Small parts cylinder with the dimensions specified in Figure 1.

Dimensions in millimetres

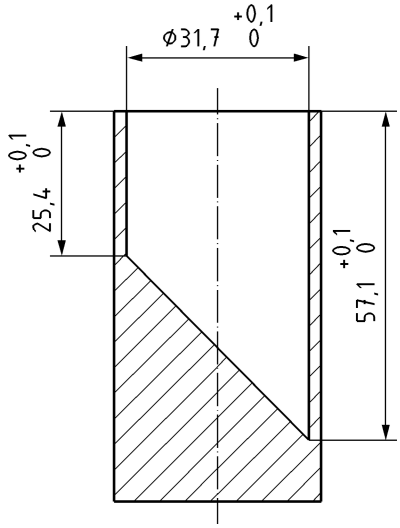

Figure 1 — Small parts cylinder

4.2 Feeler gauge

Gauge with thickness of (0,4 ± 0,02) mm, with the end to be inserted having a radius of approximately (3 ± 0,5) mm, see Figure 2.

Dimensions in millimetres

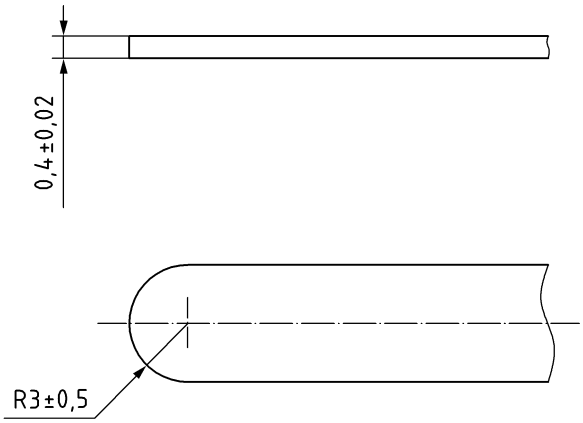

Figure 2 — Feeler gauge dimensions

4.3 Test torso

Rigid torso made from a hard smooth material with the dimensions specified in Figure 3 which is fitted on a rigid plate.

Documents
Document Sharing Hub
Full document details: BS EN 13209-1:2022

Dimensions in millimetres

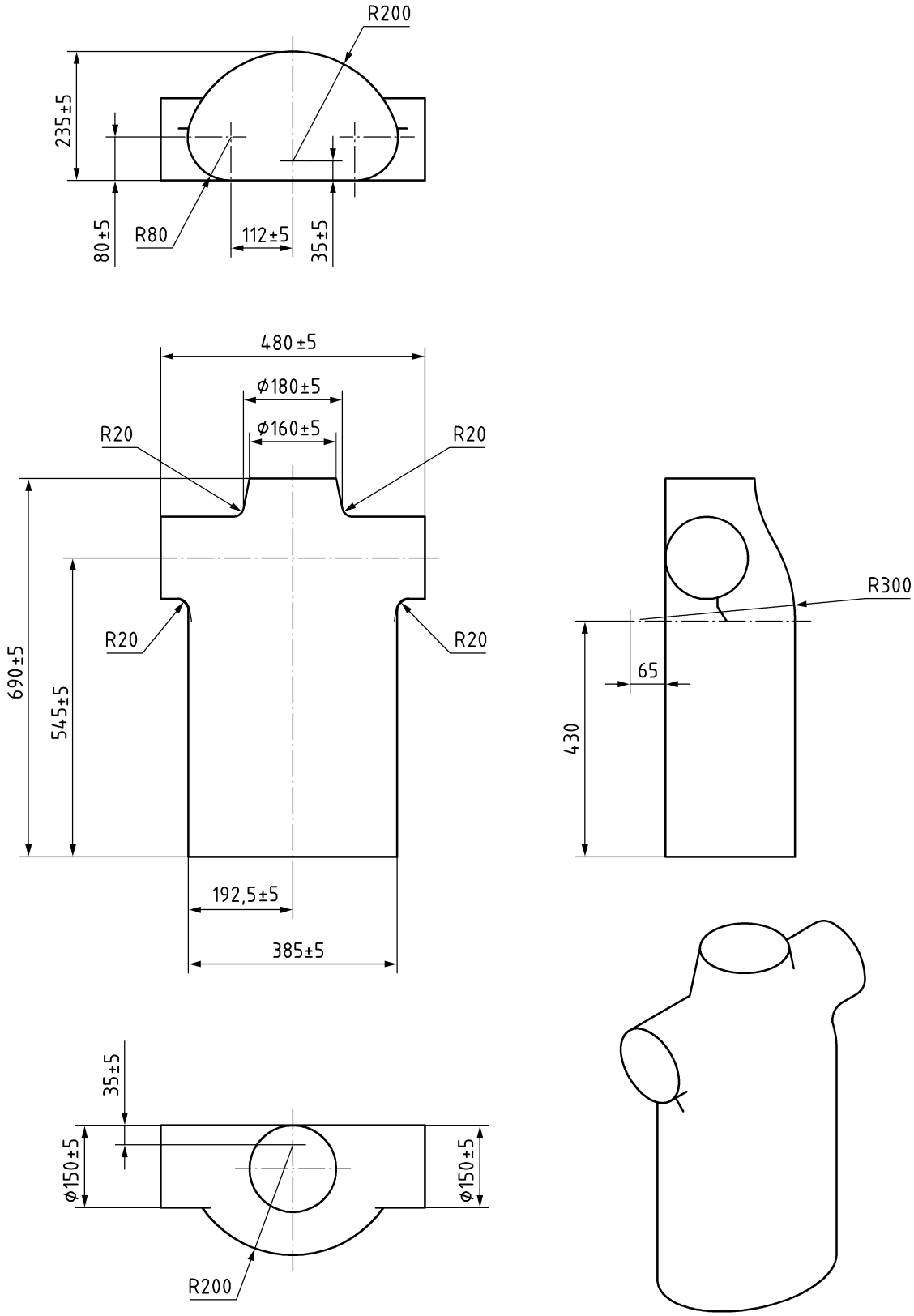

Figure 3 — Test torso

Documents
Document Sharing Hub
Full document details: BS EN 13209-1:2022

4.4 Test masses and dummy

4.4.1 Test mass A

Bag filled with sand to a total mass of 15 kg, the shape and size of which is adjustable so that it can be firmly restrained by the carrier.

4.4.2 Test mass B

Bag filled with sand to a total mass of 18 kg, the shape and size of which is adjustable so that it can be firmly restrained by the carrier.

4.4.3 Test mass C

Rigid cylinder (200 ± 5) mm in diameter and (300 ± 5) mm in height having a mass of (15 + 0,01/0) kg with its centre of gravity in the centre of the cylinder. All edges shall have a radius of (5 ± 1) mm. Two anchorage points shall be provided, positioned (150 ± 2,5) mm from the base and at 180° to each other around the circumference. See Figure 4.

Dimensions in millimetres

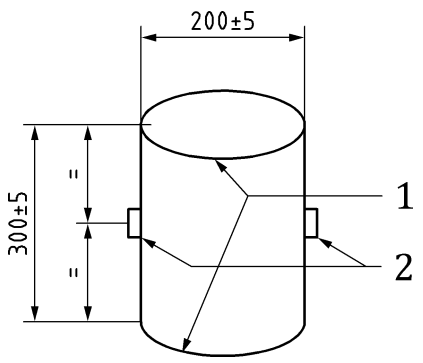

Key

1 radius (5 ± 1) mm

2 two anchorage points

Figure 4 — Test mass C

4.4.4 Test mass D

Rigid cylinder as shown in Figure 4 but (160 ± 5) mm in diameter and (300 ± 5) mm in height, having a mass of (9 + 0,01/0) kg and with its centre of gravity in the centre of the cylinder. All edges shall have a radius of (5 ± 1) mm. Two anchorage points shall be provided, positioned (150 ± 2,5) mm from the base and at 180° to each other around the circumference.

4.4.5 Test dummy

Made of a rigid material with a smooth finish with a total mass of (9 ± 0,1) kg (see Figure 5).

Documents
Document Sharing Hub
Full document details: BS EN 13209-1:2022