BS EN 13225:2013

BSI Standards Publication

Precast concrete products — Linear structural elements

bsi.

...making excellence a habit.™

Document Sharing Hub

Full document details: BS EN 13225:2013

National foreword

This British Standard is the UK implementation of EN 13225:2013. It supersedes BS EN 13225:2004, which is withdrawn.

The UK participation in its preparation was entrusted to Technical Committee B/524, Precast concrete products.

A list of organizations represented on this committee can be obtained on request to its secretary.

This publication does not purport to include all the necessary provisions of a contract. Users are responsible for its correct application.

© The British Standards Institution 2013.
Published by BSI Standards Limited 2013.

ISBN 978 0 580 72250 9

ICS 91.100.30

Compliance with a British Standard cannot confer immunity from legal obligations.

This British Standard was published under the authority of the Standards Policy and Strategy Committee on 30 April 2013.

Amendments issued since publication

Date	Text affected

Documents
Document Sharing Hub

Full document details: BS EN 13225:2013

EUROPEAN STANDARD

NORME EUROPÉENNE

EUROPÄISCHE NORM

EN 13225

April 2013

ICS 91.100.30

Supersedes EN 13225:2004

English Version

Precast concrete products - Linear structural elements

Produits préfabriqués en béton - Éléments de structure linéaires

Betonfertigteile - Stabförmige tragende Bauteile

This European Standard was approved by CEN on 19 January 2013.

CEN members are bound to comply with the CEN/CENELEC Internal Regulations which stipulate the conditions for giving this European Standard the status of a national standard without any alteration. Up-to-date lists and bibliographical references concerning such national standards may be obtained on application to the CEN-CENELEC Management Centre or to any CEN member.

This European Standard exists in three official versions (English, French, German). A version in any other language made by translation under the responsibility of a CEN member into its own language and notified to the CEN-CENELEC Management Centre has the same status as the official versions.

CEN members are the national standards bodies of Austria, Belgium, Bulgaria, Croatia, Cyprus, Czech Republic, Denmark, Estonia, Finland, Former Yugoslav Republic of Macedonia, France, Germany, Greece, Hungary, Iceland, Ireland, Italy, Latvia, Lithuania, Luxembourg, Malta, Netherlands, Norway, Poland, Portugal, Romania, Slovakia, Slovenia, Spain, Sweden, Switzerland, Turkey and United Kingdom.

EUROPEAN COMMITTEE FOR STANDARDIZATION
COMITÉ EUROPÉEN DE NORMALISATION
EUROPÄISCHES KOMITEE FÜR NORMUNG

Management Centre: Avenue Marnix 17, B-1000 Brussels

© 2013 CEN All rights of exploitation in any form and by any means reserved worldwide for CEN national Members.

Ref. No. EN 13225:2013: E

Documents
Document Sharing Hub

Full document details: BS EN 13225:2013

Contents

Page

The numbering of clauses is strictly related to EN 13369, *Common rules for precast concrete products*, at least for the first three digits. When a clause of EN 13369 is not relevant or included in a more general reference of this standard, its number is omitted and this may result in a gap on numbering.

Foreword 3

Introduction 5

1 Scope 6

2 Normative references 6

3 Terms and definitions 6

4 Requirements 6
4.1 Material requirements 6
4.2 Production requirements 7
4.3 Finished product requirements 7
4.3.1 Geometrical properties 7
4.3.2 Surface characteristics 10
4.3.3 Mechanical resistance 10
4.3.4 Resistance and reaction to fire 11
4.3.7 Durability 11
4.3.8 Other requirements 11
4.3.9 Dangerous substances 11

5 Test methods 11

6 Evaluation of conformity 11
6.1 General 11
6.2 Initial type testing 12
6.3 Factory production control 12

7 Marking 12

8 Technical documentation 13

Annex A (informative) **Precautions about lateral buckling of beams** 14

Annex ZA (informative) **Clauses of this European Standard addressing the provisions of the EU Constructions Products Directive** 16
ZA.1 Scope and relevant characteristics 16
ZA.2 Procedure for attestation of conformity of linear precast concrete structural elements 18
ZA.2.1 System of attestation of conformity 18
ZA.2.2 EC Certificate and Declaration of conformity 20
ZA.3 CE marking and labelling 21
ZA.3.1 General 21
ZA.3.2 Declaration of geometrical data and material properties (method 1) 22
ZA.3.3 Declaration of product properties (method 2) 25
ZA.3.4 Declaration of compliance with a design specification provided by the client (method 3a) 28
ZA.3.5 Declaration of compliance with a design specification provided by the manufacturer according to the client's order (method 3b) 30

Bibliography 33

Documents
Document Sharing Hub
Full document details: BS EN 13225:2013

Foreword

This document (EN 13225:2013) has been prepared by Technical Committee CEN/TC 229 “Precast concrete products”, the secretariat of which is held by AFNOR.

This European Standard shall be given the status of a national standard, either by publication of an identical text or by endorsement, at the latest by October 2013, and conflicting national standards shall be withdrawn at the latest by October 2013.

Attention is drawn to the possibility that some of the elements of this document may be the subject of patent rights. CEN [and/or CENELEC] shall not be held responsible for identifying any or all such patent rights.

This document supersedes EN 13225:2004.

This document has been prepared under a mandate given to CEN by the European Commission and the European Free Trade Association, and supports essential requirements of EU Directive(s).

For relationship with EU Directive(s), see informative Annex ZA, which is an integral part of this document.

Compared with the previous edition, the following changes have been made:

a) addition of lightweight concrete in the Scope;

b) change in subclause 4.3.3.3 Seismic behaviour;

c) addition of subclause 4.3.9 Dangerous substances;

d) changes referring to dangerous substances in Annex ZA.

This standard is one of a series of product standards for precast concrete products.

For common aspects reference is made to EN 13369 *Common rules for precast products*, from which also the relevant requirements of the EN 206-1 *Concrete — Part 1: Specification, performances, production and conformity* are taken.

The references to EN 13369 by CEN/TC 229 product standards are intended to make them homogeneous and to avoid repetitions of similar requirements.

This standard was examined by and agreed with a joint working group party appointed by the Liaison group CEN/TC 229 – CEN/TC 250, particularly for its compatibility with structural Eurocodes. Eurocodes are taken as a common reference for design aspects. The installation of some structural precast concrete products is dealt with by EN 13670 *Execution of concrete structures.*

The programme of standards for structural precast concrete products comprises the following standards, in some cases consisting of several parts:

— EN 1168, *Precast concrete products — Hollow core slabs*

— EN 12794, *Precast concrete products — Foundation piles*

— EN 12843, *Precast concrete products — Masts and poles*

— EN 13224, *Precast concrete products — Ribbed floor elements*

Documents
Document Sharing Hub
Full document details: BS EN 13225:2013

— EN 13225, *Precast concrete products — Linear structural elements*

— EN 13693, *Precast concrete products — Special roof elements*

— EN 13747, *Precast concrete products — Floor plates for floor systems*

— EN 13978, *Precast concrete products — Precast concrete garages*

— EN 14843, *Precast concrete products — Stairs*

— EN 14844, *Precast concrete products — Box culverts*

— EN 14991, *Precast concrete products — Foundation elements*

— EN 14992, *Precast concrete products — Wall elements*

— EN 15037, *Precast concrete products — Beam-and-block floor systems*

— EN 15258, *Precast concrete products — Retaining wall elements*

— EN 15050, *Precast concrete products — Bridge elements*

This standard defines in Annex ZA the application methods of CE marking to products designed using the relevant EN Eurocodes (EN 1992-1-1, EN 1992-1-2 and EN 1998-1). Where, in default of applicability conditions of EN Eurocodes to the works of destination, design provisions other than EN Eurocodes are used for mechanical strength and/or fire resistance, the conditions to affix CE marking to the product are described in ZA.3.4.

According to the CEN-CENELEC Internal Regulations, the national standards organisations of the following countries are bound to implement this European Standard: Austria, Belgium, Bulgaria, Croatia, Cyprus, Czech Republic, Denmark, Estonia, Finland, Former Yugoslav Republic of Macedonia, France, Germany, Greece, Hungary, Iceland, Ireland, Italy, Latvia, Lithuania, Luxembourg, Malta, Netherlands, Norway, Poland, Portugal, Romania, Slovakia, Slovenia, Spain, Sweden, Switzerland, Turkey and the United Kingdom.

Documents
Document Sharing Hub
Full document details: BS EN 13225:2013

Introduction

The evaluation of conformity given in this document refers to the completed precast elements which are supplied to the market and covers all the production operations carried out in the factory.

For design rules and resistance to fire, reference is made to EN 1992-1-1 and EN 1992-1-2. Additional complementary rules are provided where necessary.

In 4.3.3 and 4.3.4, this document includes specific provisions resulting from the application of EN 1992-1-1, EN 1998-1 and EN 1992-1-2 rules made specific for the concerned product. The use of these provisions is consistent with a design of works made with EN 1992-1-1 and EN 1992-1-2.

Documents
Document Sharing Hub
Full document details: BS EN 13225:2013

1 Scope

This European Standard identifies the requirements, the basic performance criteria and evaluation of conformity for precast linear elements (such as columns, beams and frame elements) made of reinforced or prestressed normal or lightweight concrete, used for the construction of the structures of buildings and other civil engineering works, except bridges.

This document covers terminology, performance criteria, tolerances, relevant physical properties, test methods, and aspects of transport and erection.

This document does not cover load bearing capacity determined by testing.

This standard does not cover lintels with length up to 4,5 m used in masonry walls.

2 Normative references

The following documents, in whole or in part, are normatively referenced in this document and are indispensable for its application. For dated references, only the edition cited applies. For undated references, the latest edition of the referenced document (including any amendments) applies.

EN 1992-1-1:2004, *Eurocode 2: Design of concrete structures — Part 1-1: General rules and rules for buildings*

EN 1998-1:2004, *Eurocode 8: Design of structures for earthquake resistance — Part 1: General rules, seismic actions and rules for buildings*

EN 13369:2013, *Common rules for precast concrete products*

3 Terms and definitions

For the purposes of this document, the terms and definitions given in EN 13369:2013 and the following apply.

NOTE In general, the term “product” refers to an element which is produced in large numbers.

3.1
beam
element, usually horizontal, for carrying loads primarily by flexure

3.2
column
vertical bearing element subject mainly to compression

3.3
frame
structure composed of two or more linear elements joined together to ensure stability

4 Requirements

4.1 Material requirements

For general aspects, constituent materials of concrete, reinforcing and prestressing steel, inserts and connectors, the relevant clauses of EN 13369:2013, 4.1 shall apply. In particular, the ultimate tensile and tensile yield strength of steel shall be considered.

Documents
Document Sharing Hub
Full document details: BS EN 13225:2013

4.2 Production requirements

For concrete production, hardened concrete and structural reinforcement, the relevant clauses of EN 13369:2013, 4.2 shall apply. In particular, the compressive strength of concrete shall be considered.

4.3 Finished product requirements

4.3.1 Geometrical properties

NOTE The missing numbers correspond to the clauses of EN 13369:2013 which are not relevant for the purposes of this document.

4.3.1.1 Production tolerances

4.3.1.1.1 General

4.3.1.1 of EN 13369:2013 and the following tolerances specific to linear elements shall apply.

The values refer to measurements taken according to 5.2 of EN 13369:2013.

Figures 1 and 2 describe, for columns and beams, the relevant tolerances, where Δh corresponds to ΔL of EN 13369:2013, 4.3.1.1.

4.3.1.1.2 Principal dimensions

For linear elements, the tolerances are given in Table 1.

Table 1 — Tolerances for linear elements

Measurement	Permitted deviation	Values
Angle deviation δ of end- or cross-sections	$\pm\ \delta$	$h/100 \geq 5$ mm
Bow misalignment ε in any principal plane	$\pm\ \varepsilon$	$L/700$

For cross-section dimensions, length and reinforcement placing, the corresponding permitted deviations Δh, ΔL and Δc are given in 4.3.1.1 of EN 13369:2013.

For the size of holes and openings 1,5 times the values of Δh and δ tolerances may be assumed. For the overall positioning of holes and inserts 1,5 times the values of ΔL and Δh tolerances may be assumed. Other values may be given in project specifications.

The values of the tolerances do not include the deformation effects of any applied load or of prestressing. In the verification of the measured deviations, such deformations shall be taken into account by computing their value for the test situation.

NOTE Bow misalignment corresponds to deviation from straightness. For beams in the vertical plane, it corresponds to camber.

4.3.1.1.3 Columns

For columns, tolerances of 4.3.1.1.2 are described in Figure 1.

Documents
Document Sharing Hub
Full document details: BS EN 13225:2013

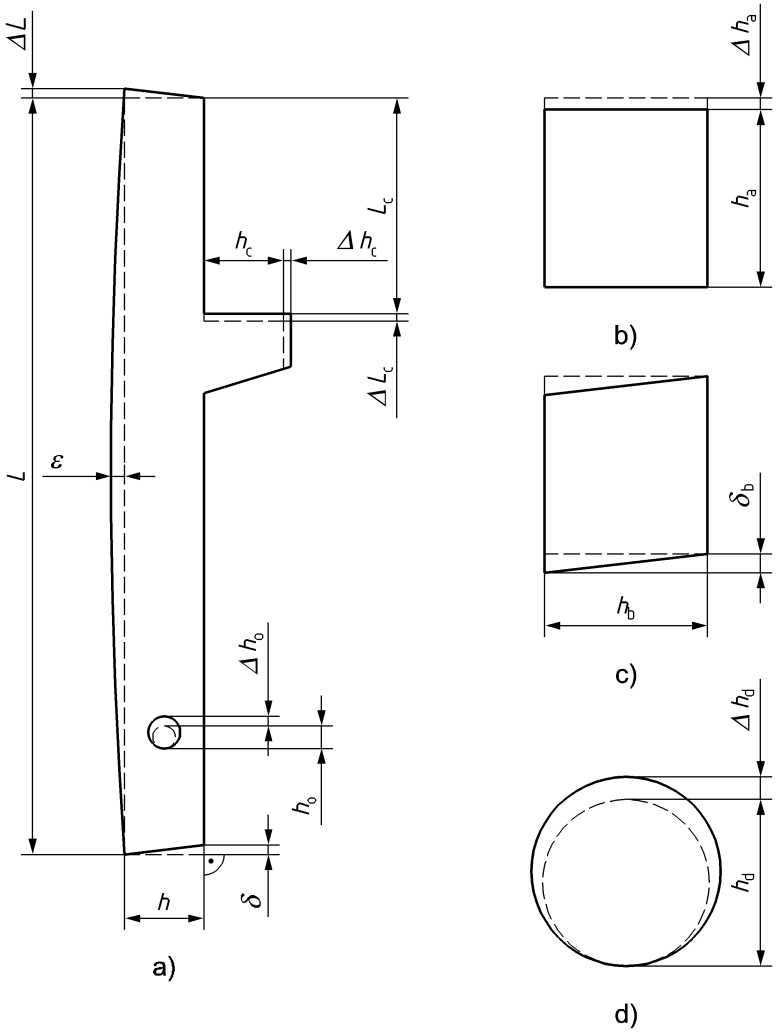

Key

a) lateral view: principal tolerances
b) cross section (linear deviation)
c) cross section (angle deviation)
d) circular cross section (linear deviation)

Figure 1 — Tolerances for columns

Documents
Document Sharing Hub
Full document details: BS EN 13225:2013

4.3.1.1.4 Beams

For beams, the tolerances, additional to those of 4.3.1.1.2, are given in Table 2 (see Figure 2).

Table 2 — Tolerances for beams

Measurement	Tolerance	Values
Skew θ of the vertical central plane	$\pm\ \theta$	$L/700$
Camber v in vertical plane	$\pm\ \Delta v$	$L/700$

For prestressed elements 1,5 times the value of Δv tolerance may be assumed; this includes the effects of prestressing tolerance.

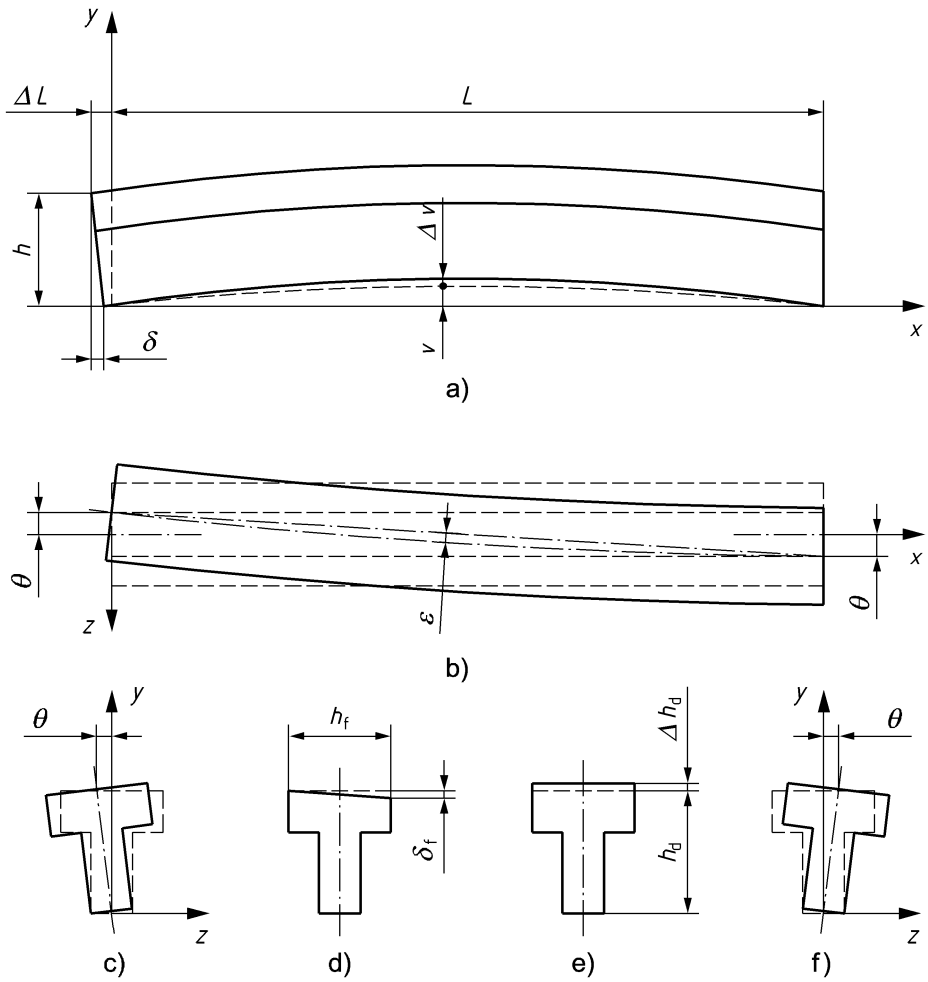

Key

a) lateral view: principal tolerances
b) in plan view: principal tolerances
c) cross section (skew)
d) cross section (angle deviation)
e) cross section (linear deviation)
f) cross section (skew)

Figure 2 — Tolerances for beams

Documents
Document Sharing Hub
Full document details: BS EN 13225:2013

4.3.1.1.5 Other elements

For other types of linear precast structural elements, such as frame elements (see Figure 3), all the production tolerances and the method for checking shall be defined in the project specifications, in a similar manner to that given in this document. The permitted deviations of cross sections shall be in accordance with Table 4 of EN 13369:2013.

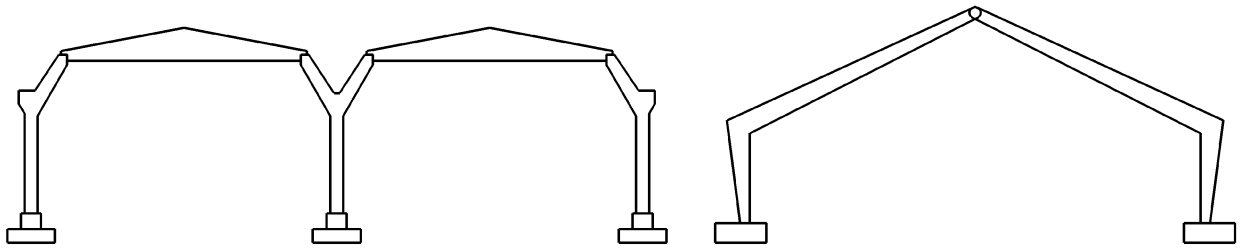

Figure 3 — Examples of frame elements

4.3.1.2 Minimum dimensions

4.3.1.2 of EN 13369:2013 shall apply.

4.3.2 Surface characteristics

4.3.2 of EN 13369:2013 shall apply.

4.3.3 Mechanical resistance

4.3.3.1 General

For requirements on mechanical strength, 4.3.3 of EN 13369:2013 (referring to EN 1992-1-1:2004) shall apply, except 4.3.3.4 dealing with verification by testing.

4.3.3.2 Transient situations

For transient situations, 4.3.3.6 of EN 13369:2013 shall apply.

In Annex A, important information is given for lateral buckling of slender beams during lifting, transportation and erection.

4.3.3.3 Seismic behaviour

Within the scope of 5.2.2 of EN 1998-1:2004, precast columns of one-storey buildings with hinged top connections to the beams belong to frame systems under the following conditions:

a) the columns are designed on the assumption that their tops are connected along both main directions of the building to the supported elements by structural connections as specified in 5.11.3.1(2) of EN 1998-1:2004;

b) the column normalised axial load (ratio between design axial action and corresponding design strength) does not exceed 0,3 in the seismic design situation;

c) the columns are based with full degree of support in foundations designed in accordance with 5.11.2.1.2 of EN 1998-1:2004;

Documents
Document Sharing Hub
Full document details: BS EN 13225:2013