BS EN 13322-1:2024

BSI Standards Publication

Transportable gas cylinders — Refillable welded steel gas cylinders — Design and construction

Part 1: Carbon steel

Documents
Document Sharing Hub

Full document details: BS EN 13322-1:2024

National foreword

This British Standard is the UK implementation of EN 13322-1:2024. It supersedes BS EN 13322-1:2003+A1:2006, which is withdrawn.

The UK participation in its preparation was entrusted to Technical Committee PVE/3, Gas containers.

A list of organizations represented on this committee can be obtained on request to its committee manager.

Contractual and legal considerations

This publication has been prepared in good faith, however no representation, warranty, assurance or undertaking (express or implied) is or will be made, and no responsibility or liability is or will be accepted by BSI in relation to the adequacy, accuracy, completeness or reasonableness of this publication. All and any such responsibility and liability is expressly disclaimed to the full extent permitted by the law.

This publication is provided as is, and is to be used at the recipient's own risk.

The recipient is advised to consider seeking professional guidance with respect to its use of this publication.

This publication is not intended to constitute a contract. Users are responsible for its correct application.

© The British Standards Institution 2024
Published by BSI Standards Limited 2024

ISBN 978 0 539 19514 9

ICS 23.020.35

Compliance with a British Standard cannot confer immunity from legal obligations.

This British Standard was published under the authority of the Standards Policy and Strategy Committee on 31 May 2024.

Amendments/corrigenda issued since publication

Date	Text affected

Documents
Document Sharing Hub

EUROPEAN STANDARD

NORME EUROPÉENNE

EUROPÄISCHE NORM

EN 13322-1

May 2024

ICS 23.020.35

Supersedes EN 13322-1:2003,
EN 13322-1:2003/A1:2006

English Version

Transportable gas cylinders - Refillable welded steel gas cylinders - Design and construction - Part 1: Carbon steel

Bouteilles à gaz transportables - Bouteilles à gaz rechargeables soudées en acier - Conception et construction - Partie 1 : Acier au carbone

Ortsbewegliche Gasflaschen - Wiederbefüllbare geschweißte Flaschen aus Stahl - Auslegung und Herstellung - Teil 1: Flaschen aus Kohlenstoffstahl

This European Standard was approved by CEN on 5 May 2024.

CEN members are bound to comply with the CEN/CENELEC Internal Regulations which stipulate the conditions for giving this European Standard the status of a national standard without any alteration. Up-to-date lists and bibliographical references concerning such national standards may be obtained on application to the CEN-CENELEC Management Centre or to any CEN member.

This European Standard exists in three official versions (English, French, German). A version in any other language made by translation under the responsibility of a CEN member into its own language and notified to the CEN-CENELEC Management Centre has the same status as the official versions.

CEN members are the national standards bodies of Austria, Belgium, Bulgaria, Croatia, Cyprus, Czech Republic, Denmark, Estonia, Finland, France, Germany, Greece, Hungary, Iceland, Ireland, Italy, Latvia, Lithuania, Luxembourg, Malta, Netherlands, Norway, Poland, Portugal, Republic of North Macedonia, Romania, Serbia, Slovakia, Slovenia, Spain, Sweden, Switzerland, Türkiye and United Kingdom.

EUROPEAN COMMITTEE FOR STANDARDIZATION
COMITÉ EUROPÉEN DE NORMALISATION
EUROPÄISCHES KOMITEE FÜR NORMUNG

CEN-CENELEC Management Centre: Rue de la Science 23, B-1040 Brussels

© 2024 CEN All rights of exploitation in any form and by any means reserved worldwide for CEN national Members.

Ref. No. EN 13322-1:2024 E

Documents
Document Sharing Hub

Full document details: BS EN 13322-1:2024

Contents

Page

European foreword 3
Introduction 5
1 Scope 6
2 Normative references 6
3 Terms and definitions 7
4 Materials and heat treatment 10
5 Design 10
6 Construction and workmanship 14
7 New design tests 17
8 Batch tests 20
9 Tests on every cylinder 27
10 Failure to meet test requirements 27
11 Records 28
12 Marking 28
Annex A (normative) Cylinder shells for acetylene service made from longitudinal seam high frequency induction (HFI) welded tube by spinning of the end 29
Annex B (normative) Radiographic examination of welds 31
Annex C (normative) Description, evaluation of manufacturing defects and conditions for rejection of welded steel gas cylinders at time of visual inspection 34
Annex D (informative) Examples of design and batch test certificates 37
Bibliography 44

Documents
Document Sharing Hub
Full document details: BS EN 13322-1:2024

European foreword

This document (EN 13322-1:2024) has been prepared by Technical Committee CEN/TC 23 “Transportable gas cylinders”, the secretariat of which is held by BSI.

This European Standard shall be given the status of a national standard, either by publication of an identical text or by endorsement, at the latest by November 2024, and conflicting national standards shall be withdrawn at the latest by November 2024.

Attention is drawn to the possibility that some of the elements of this document may be the subject of patent rights. CEN shall not be held responsible for identifying any or all such patent rights.

This document supersedes EN 13322-1:2003 and EN 13322-1:2003/A1:2006.

In comparison with the previous edition, the following technical modifications have been made:

— updating of the normative references;

— removal of the limit of a minimal water capacity of 0,5 l;

— addition of a new Clause 8.4.4 “Requirements for ductility testing of small cylinders”;

— modification of term 3.1 from yield stress to yield strength;

— update according to the latest requirements on standards to be proposed for ADR;

— clarification of the verbal forms for expression of provisions;

— removal of Annex E.

This document has been submitted for reference in:

— the RID [5] and

— the technical annexes of the ADR [4].

NOTE Attention is drawn to possible national/international legislation in relation to this document. It is emphasized that the the RID/ADR are being revised regularly at intervals of two years.

This document is one of a series of two standards concerning refillable welded steel gas cylinders of water capacities up to and including 150 l for compressed, liquefied and dissolved gases:

— Part 1: Carbon steel

— Part 2: Stainless steel

Annexes A, B and C are normative. Annex D is informative.

Any feedback and questions on this document should be directed to the users’ national standards body. A complete listing of these bodies can be found on the CEN website.

Documents
Document Sharing Hub
Full document details: BS EN 13322-1:2024

According to the CEN-CENELEC Internal Regulations, the national standards organisations of the following countries are bound to implement this European Standard: Austria, Belgium, Bulgaria, Croatia, Cyprus, Czech Republic, Denmark, Estonia, Finland, France, Germany, Greece, Hungary, Iceland, Ireland, Italy, Latvia, Lithuania, Luxembourg, Malta, Netherlands, Norway, Poland, Portugal, Republic of North Macedonia, Romania, Serbia, Slovakia, Slovenia, Spain, Sweden, Switzerland, Türkiye and the United Kingdom.

Documents
Document Sharing Hub

Full document details: BS EN 13322-1:2024

Introduction

The purpose of this document is to provide a specification for the design, manufacture, and testing of refillable, transportable, welded steel gas cylinders.

The specifications given are based on knowledge of, and experience with, materials, design requirements, manufacturing processes and control during manufacture, of cylinders in common use in the countries of the CEN members.

This document is based on the traditional calculation method. It does not cover other methods such as finite element analysis (F.E.A) methods or experimental methods.

Documents
Document Sharing Hub
Full document details: BS EN 13322-1:2024

1 Scope

This document specifies minimum requirements concerning material, design, construction and workmanship, manufacturing processes and testing of refillable transportable welded carbon steel gas cylinders of water capacities up to and including 150 l for compressed, liquefied and dissolved gases.

For acetylene service, additional requirements for the cylinder and basic requirements for the porous material are given in EN ISO 3807. For cylinder shells for acetylene service manufactured from high frequency induction (HFI) welded steel tubes by spinning of the end, the requirements are given in Annex A.

This document is primarily applicable to industrial gases other than LPG but can also be applied for LPG. However for dedicated LPG cylinders, see EN 1442.

2 Normative references

The following documents are referred to in the text in such a way that some or all of their content constitutes requirements of this document. For dated references, only the edition cited applies. For undated references, the latest edition of the referenced document (including any amendments) applies.

EN 10028-1, *Flat products made of steels for pressure purposes - Part 1: General requirements*

EN 10028-3, *Flat products made of steels for pressure purposes - Part 3: Weldable fine grain steels, normalized*

EN 10028-5, *Flat products made of steels for pressure purposes - Part 5: Weldable fine grain steels, thermomechanically rolled*

EN 10120, *Steel sheet and strip for welded gas cylinders*

EN 13445-2, *Unfired pressure vessels - Part 2: Materials*

EN ISO 148-1, *Metallic materials - Charpy pendulum impact test - Part 1: Test method (ISO 148-1)*

EN ISO 683-1, *Heat-treatable steels, alloy steels and free-cutting steels - Part 1: Non-alloy steels for quenching and tempering (ISO 683-1)*

EN ISO 683-2, *Heat-treatable steels, alloy steels and free-cutting steels - Part 2: Alloy steels for quenching and tempering (ISO 683-2)*

EN ISO 3183, *Petroleum and natural gas industries - Steel pipe for pipeline transportation systems (ISO 3183)*

EN ISO 5173, *Destructive tests on welds in metallic materials - Bend tests*

EN ISO 5817, *Welding - Fusion-welded joints in steel, nickel, titanium and their alloys (beam welding excluded) - Quality levels for imperfections (ISO 5817)*

EN ISO 6892-1, *Metallic materials - Tensile testing - Part 1: Method of test at room temperature (ISO 6892-1)*

EN ISO 6892-2, *Metallic materials - Tensile testing - Part 2: Method of test at elevated temperature (ISO 6892-2)*

EN ISO 9606-1, *Qualification testing of welders - Fusion welding - Part 1: Steels (ISO 9606-1)*

EN ISO 9712, *Non-destructive testing - Qualification and certification of NDT personnel (ISO 9712)*

AVA Documents
Document Sharing Hub

Full document details: BS EN 13322-1:2024

EN ISO 9809-3:2019, *Gas cylinders - Design, construction and testing of refillable seamless steel gas cylinders and tubes - Part 3: Normalized steel cylinders and tubes (ISO 9809-3:2019)*

EN ISO 10675-1, *Non-destructive testing of welds - Acceptance levels for radiographic testing - Part 1: Steel, nickel, titanium and their alloys (ISO 10675-1)*

EN ISO 11114-1, *Gas cylinders - Compatibility of cylinder and valve materials with gas contents - Part 1: Metallic materials (ISO 11114-1)*

EN ISO 11117:2019, *Gas cylinders - Valve protection caps and guards - Design, construction and tests (ISO 11117:2019)*

EN ISO 13769, *Gas cylinders - Stamp marking (ISO 13769)*

EN ISO 15607, *Specification and qualification of welding procedures for metallic materials - General rules (ISO 15607)*

EN ISO 15609-1, *Specification and qualification of welding procedures for metallic materials - Welding procedure specification - Part 1: Arc welding (ISO 15609-1)*

EN ISO 15614-1, *Specification and qualification of welding procedures for metallic materials - Welding procedure test - Part 1: Arc and gas welding of steels and arc welding of nickel and nickel alloys (ISO 15614-1)*

EN ISO 17636-1:2022, *Non-destructive testing of welds - Radiographic testing - Part 1: X- and gamma-ray techniques with film (ISO 17636-1:2022)*

EN ISO 17636-2:2022, *Non-destructive testing of welds - Radiographic testing - Part 2: X- and gamma-ray techniques with digital detectors (ISO 17636-2:2022)*

EN ISO 17637, *Non-destructive testing of welds - Visual testing of fusion-welded joints (ISO 17637)*

3 Terms, definitions and symbols

For the purposes of this document, the terms and definitions given in EN ISO 10286 and the following apply.

ISO and IEC maintain terminological databases for use in standardization at the following addresses:

- IEC Electropedia: available at https://www.electropedia.org/
- ISO Online browsing platform: available at https://www.iso.org/obp

3.1 Terms and definitions

3.1.1
yield strength
stress corresponding to the point reached during the test at which plastic deformation occurs without any increase in the force, in case the metallic material exhibits a yield phenomenon

3.1.2
normalizing
heat treatment in which a cylinder is heated to a uniform temperature above the upper critical point of the steel and then cooled in a controlled atmosphere

Note 1 to entry: Upper critical point is A_3, as specified in EN ISO 4885.

AVA Documents Document Sharing Hub

Full document details: BS EN 13322-1:2024

3.1.3
stress relieving
heat treatment given to the finished cylinder, the object of which is to reduce the residual stresses without altering the metallurgical structure of the steel, by heating to a uniform temperature below the lower critical point of the steel and cooling in a still atmosphere

Note 1 to entry: Lower critical point is A_1, as specified in EN ISO 4885.

3.1.4
batch
quantity of finished cylinders made consecutively during the same or consecutive days to the same design, size and material specifications and from the same material supplier for each pressure containing part on the same automatic welding machines and heat-treated under the same conditions of temperature and duration

Note 1 to entry: This definition allows different suppliers to be used for the different pressure containing parts within a batch, e.g. one supplier for heads, another for bases.

3.1.5
design stress factor
F
ratio of equivalent wall stress at test pressure (p_h) to guaranteed minimum yield strength (R_e)

3.1.6
test valve
valve used for the drop test to qualify the shroud as a valve protection device

3.1.7
permitted mass
mass of the cylinder and valve plus its maximum contents as used in the drop test

3.1.8
shroud
integral part of a welded cylinder design for valve protection during transport, handling and storage

Documents
Document Sharing Hub

Full document details: BS EN 13322-1:2024

3.2 Symbols

a	Calculated minimum thickness, in millimetres, of the cylindrical shell
a'	Guaranteed minimum thickness, in millimetres, of the cylindrical shell (including any corrosion allowance see 7.1)
a_1	Calculated value of a used in the calculation of b (see 5.3.2)
A	Percentage elongation after fracture
b	Calculated minimum thickness, in millimetres, of the cylinder end (see Figure 1)
b'	Guaranteed minimum thickness, in millimetres, of the cylinder end (see 7.1)
C	Shape factor of dished ends
D	Outside diameter, in millimetres, of the cylinder (see Figure 1)
D_f	Diameter of former in millimetres (see Figure 11)
F	Design stress factor (see 3.1.5)
h	Height, in millimetres, of the cylindrical part of the end (see Figure 1)
H	Outside height, in millimetres, of the domed part of the end (see Figure 1)
J	Stress reduction factor (see Annex B)
L	Length, in millimetres, of the cylinder
n	Ratio of diameter of bend test former (D_f) to the thickness of the test piece (t)
p_b	Measured burst pressure, in bar[1], above atmospheric pressure, in the burst test
p_h	Hydraulic test pressure, in bar, above atmospheric pressure
r	Inside radius of knuckle end, in millimetres (see Figure 1)
R	Inside radius of the dished end, in millimetres (see Figure 1)
R_e	Yield strength, in megapascals, as defined in 3.1.1 and used for design calculation
R_{ea}	Value of the actual yield strength in megapascals determined by the tensile test
R_{eH}	Minimum value of the upper yield strength, in megapascals, guaranteed by the cylinder manufacturer for the finished cylinder, in accordance with EN ISO 6892-1
R_{eL}	Minimum value of the lower yield strength, in megapascals, guaranteed by the cylinder manufacturer for the finished cylinder, in accordance with EN ISO 6892-1
R_g	Minimum value of tensile strength, in megapascals, guaranteed by the cylinder manufacturer for the finished cylinder
R_m	Actual value of tensile strength, in megapascals, determined by the tensile test (see 8.4)
S_o	Original cross-sectional area of tensile test piece, in square millimetres, according to EN ISO 6892-1
t	Actual thickness of the test specimen, in millimetres (see Figure 7)

[1] 1 bar = 10^5 Pa = 0,1 MPa

Documents
Document Sharing Hub
Full document details: BS EN 13322-1:2024

4 Materials and heat treatment

4.1 General

4.1.1 Materials supplied for shells and end pressing shall conform to EN 10120, or EN 10028-1 and EN 10028-3, or EN 10028-1 and EN 10028-5.

4.1.2 Materials supplied for bosses shall conform to EN ISO 683-1 and EN ISO 683-2.

4.1.3 Grades of steel used for the manufacture shall be compatible with the intended gas service (e.g. corrosive gases, embrittling gases) in accordance with EN ISO 11114-1.

4.1.4 All parts welded to the cylinder (e.g. shroud, footring) shall be made of compatible weldable material.

4.1.5 The welding consumables shall be such that they are capable of giving consistent welds with minimum tensile strength at least equal to that specified for the parent material in the finished cylinder.

4.1.6 The manufacturer shall obtain and provide certificates of the ladle analysis of the steel supplied for the construction of the pressure retaining parts of the cylinder.

4.1.7 The manufacturer shall be able to guarantee cylinder steel casting traceability for each cylinder.

4.1.8 Cylinders for acetylene service shall be manufactured with materials compatible with the manufacturing process of the porous mass, or an internal coating shall be applied.

4.2 Heat treatment

Cylinders shall be delivered in either the normalized or the stress-relieved condition. The cylinder manufacturer shall certify that the cylinders have been heat-treated after completion of all welding and shall certify the process of heat treatment applied. Localized heat treatment of cylinders is not permitted, nor in the case of repaired cylinders.

The actual temperature of heat treatment to which a type of steel is subjected for a given tensile strength shall not deviate by more than 30 °C from the temperature specified by the manufacturer for the cylinder type.

5 Design

5.1 General requirements

5.1.1 The calculation of the wall thickness of the pressure parts shall be related to the yield strength of the parent material.

5.1.2 For calculation purposes, the value of the yield strength R_e is limited to a maximum of 0,85 R_g.

5.1.3 The internal pressure upon which the calculation of gas cylinders is based shall be the test pressure p_h.

5.1.4 A fully dimensioned drawing including the specification of the material shall be produced.

5.1.5 Cylinders for acetylene service shall be designed to allow for a test pressure of at least 60 bar.

5.1.6 Cylinders for acetylene service shall be designed and manufactured to ensure that conditions are safe for the eventual filling of the porous mass, e.g. preventing sharp edges and voids.

Documents
Document Sharing Hub

Full document details: BS EN 13322-1:2024

5.2 Calculation of cylindrical wall thickness

The wall thickness of the cylindrical shell shall be not less than that calculated using the formula

$$a = \frac{D}{2} \cdot \left(1 - \sqrt{\frac{10.F.J.R_e - \sqrt{3}.p_h}{10.F.J.R_e}} \right)$$

where the value of F is the lesser of $\frac{0,65}{(Re/Rg)}$ or 0,77.

R_e/R_g shall not exceed 0,85.

The value of J shall be selected in accordance with Annex B.

The minimum wall thickness shall also satisfy the requirements of 5.4.

5.3 Design of convex ends (see Figure 1)

5.3.1 The shape of ends of gas cylinders shall be such that the following conditions are fulfilled:

— for torispherical ends (see Figure 1a):

$R \leq D$;

$r \geq 0,1\ D$;

$h \geq 4b$.

— for ellipsoidal ends (see Figure 1b):

$H \geq 0,192\ D$;

$h \geq 4b$.

5.3.2 The wall thickness of the ends of gas cylinders shall be not less than that calculated using the formula:

$b = a_1 \times C$

where

a_1 is the value of a calculated in accordance with 5.2 using J = 1,0;

C is a shape factor, whose value shall be obtained from the graphs given in Figures 2 and 3.

Documents
Document Sharing Hub
Full document details: BS EN 13322-1:2024

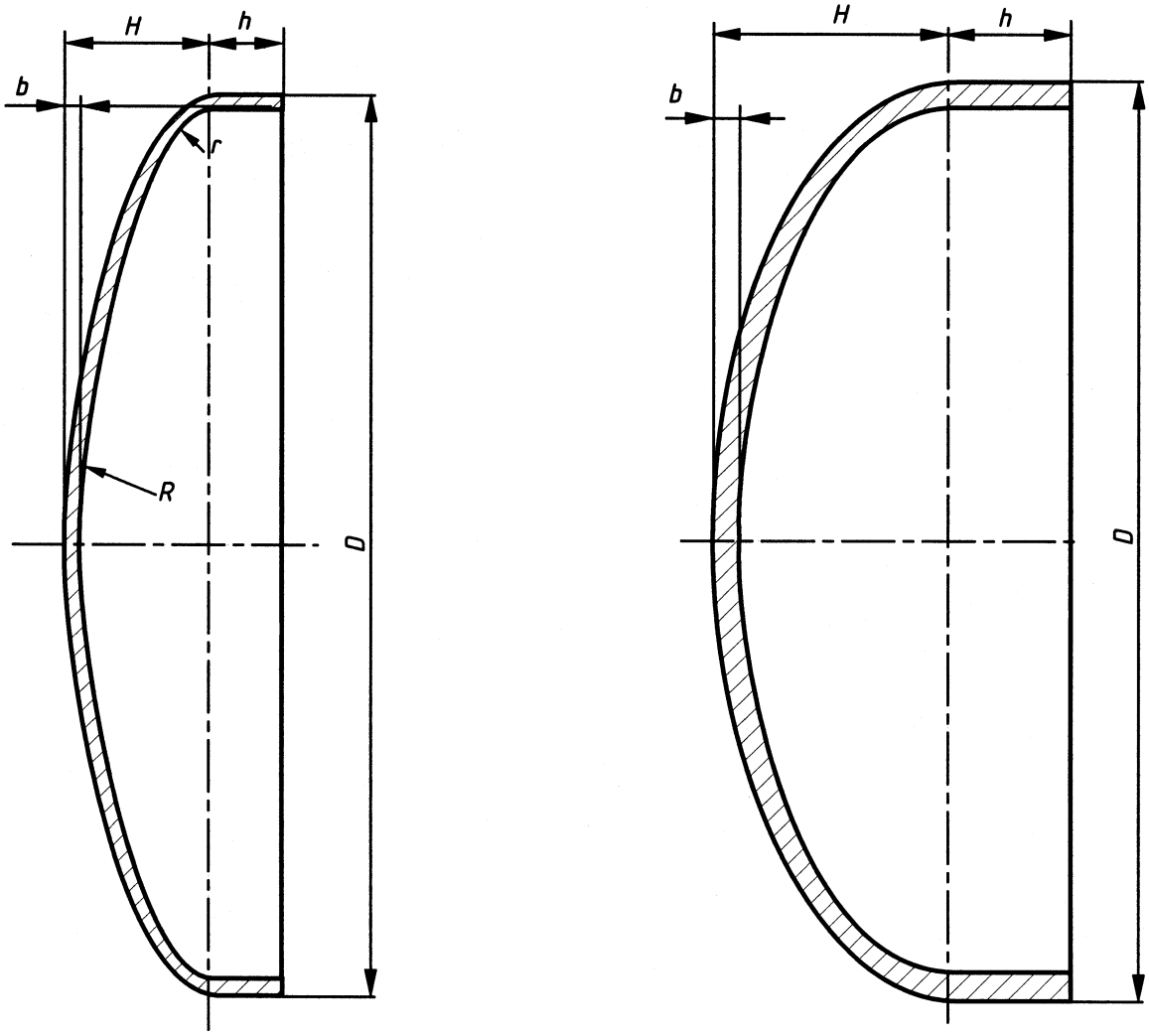

a) b)

a) Torispherical **b) Ellipsoidal**

Figure 1 — Illustration of cylinder ends

Documents
Document Sharing Hub
Full document details: BS EN 13322-1:2024

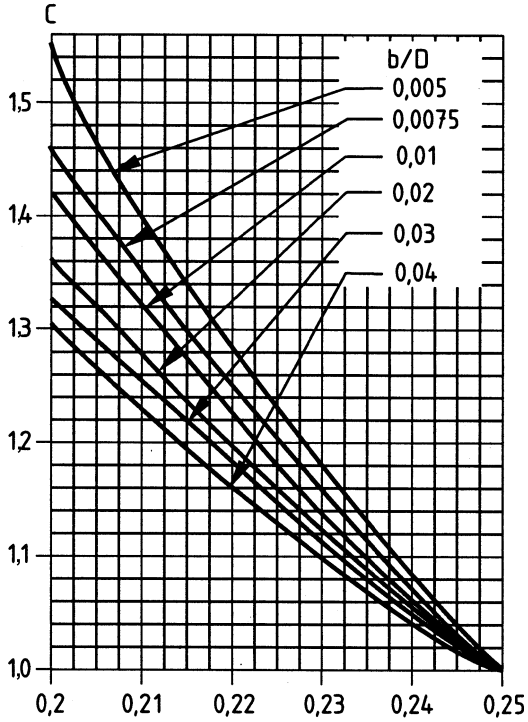

Figure 2 — Values of shape factor C for *H/D* between 0,2 and 0,25

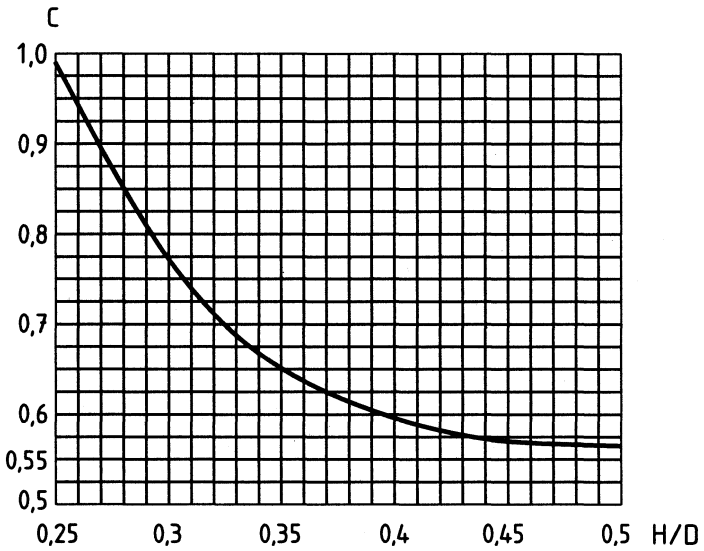

Figure 3 — Values of shape factor C for *H/D* between 0,25 and 0,5

5.4 Minimum wall thickness

5.4.1 The minimum wall thickness of the cylindrical shell a and end b shall be not less than the value derived from the appropriate one of the following formulae:

for $D \leq 100$ mm, $a = b = 1{,}1$ mm;

for 100 mm $< D \leq 150$ mm, $a = b = 1{,}1 + 0{,}008(D - 100)$ mm;

for $D > 150$ mm, $a = b = \frac{D}{250} + 0{,}7$ mm, with an absolute minimum of 1,5 mm.

Documents
Document Sharing Hub
Full document details: BS EN 13322-1:2024