BS EN 13373:2020

BSI Standards Publication

Natural stone test methods — Determination of geometric characteristics on units

Documents
Document Sharing Hub

Full document details: BS EN 13373:2020

National foreword

This British Standard is the UK implementation of EN 13373:2020. It supersedes BS EN 13373:2003, which is withdrawn.

The UK participation in its preparation was entrusted to Technical Committee B/545, Natural stone.

A list of organizations represented on this committee can be obtained on request to its secretary.

This publication does not purport to include all the necessary provisions of a contract. Users are responsible for its correct application.

© The British Standards Institution 2020
Published by BSI Standards Limited 2020

ISBN 978 0 539 00145 7

ICS 73.020; 91.100.15

Compliance with a British Standard cannot confer immunity from legal obligations.

This British Standard was published under the authority of the Standards Policy and Strategy Committee on 31 January 2020.

Amendments/corrigenda issued since publication

Date	Text affected

Documents
Document Sharing Hub

Full document details: BS EN 13373:2020

EUROPEAN STANDARD

NORME EUROPÉENNE

EUROPÄISCHE NORM

EN 13373

January 2020

ICS 91.100.15

Supersedes EN 13373:2003

English Version

Natural stone test methods - Determination of geometric characteristics on units

Méthodes d'essai pour pierres naturelles - Détermination des dimensions et autres caractéristiques géométriques

Prüfverfahren für Naturstein - Bestimmung geometrischer Merkmale von Gesteinen

This European Standard was approved by CEN on 15 April 2019.

CEN members are bound to comply with the CEN/CENELEC Internal Regulations which stipulate the conditions for giving this European Standard the status of a national standard without any alteration. Up-to-date lists and bibliographical references concerning such national standards may be obtained on application to the CEN-CENELEC Management Centre or to any CEN member.

This European Standard exists in three official versions (English, French, German). A version in any other language made by translation under the responsibility of a CEN member into its own language and notified to the CEN-CENELEC Management Centre has the same status as the official versions.

CEN members are the national standards bodies of Austria, Belgium, Bulgaria, Croatia, Cyprus, Czech Republic, Denmark, Estonia, Finland, France, Germany, Greece, Hungary, Iceland, Ireland, Italy, Latvia, Lithuania, Luxembourg, Malta, Netherlands, Norway, Poland, Portugal, Republic of North Macedonia, Romania, Serbia, Slovakia, Slovenia, Spain, Sweden, Switzerland, Turkey and United Kingdom.

EUROPEAN COMMITTEE FOR STANDARDIZATION
COMITÉ EUROPÉEN DE NORMALISATION
EUROPÄISCHES KOMITEE FÜR NORMUNG

CEN-CENELEC Management Centre: Rue de la Science 23, B-1040 Brussels

© 2020 CEN All rights of exploitation in any form and by any means reserved worldwide for CEN national Members.

Ref. No. EN 13373:2020 E

Documents
Document Sharing Hub

Full document details: BS EN 13373:2020

Contents

Page

European foreword 4
1 Scope 5
2 Normative references 5
3 Terms and definitions 5
4 Measurement of the dimensions of squared rough blocks 5
4.1 Measurement of the gross dimensions of squared rough blocks 5
4.1.1 Principle 5
4.1.2 Apparatus 5
4.1.3 Measurement procedure 5
4.1.4 Expression of the results 6
4.2 Measurement of net dimensions of rough blocks 6
4.2.1 Principle 6
4.2.2 Apparatus 6
4.2.3 Measurement procedure 6
4.2.4 Expression of the results 7
5 Measurement of the dimensions of rough slabs 7
5.1 Measurement of the gross in-plane dimensions of rough slabs 7
5.1.1 Principle 7
5.1.2 Apparatus 7
5.1.3 Measurement procedure 8
5.1.4 Expression of the results 8
5.2 Measurement of the net in-plane dimensions of rough slabs 8
5.2.1 Principle 8
5.2.2 Apparatus 8
5.2.3 Measurement procedure 9
5.2.4 Expression of the results 9
5.3 Measurement of the thickness of a rough slab 9
5.4 Measurement of the flatness of a rough slab 9
6 Measurement of the dimensions and measurement of other geometric characteristics of finished products with sawn edges 10
6.1 Principle 10
6.2 Apparatus 10
6.3 Measurement of in-plane dimensions of finished products with sawn edges 10
6.3.1 Measurement procedure 10
6.3.2 Expression of the results 11
6.4 Measurement of the thickness and surface irregularities of finished products with sawn edges 11
6.4.1 Measurement of the rough thickness 11
6.4.2 Expression of the results 12
6.4.3 Measurement of surface irregularities 12
6.4.4 Expression of results 14
6.4.5 Measurement of the nominal thickness 14
6.5 Measurement of flatness 15
6.5.1 Measurement of the flatness for a regular surface finish 15
6.5.2 Measurement of the flatness for an irregular surface finish 19

Documents
Document Sharing Hub
Full document details: BS EN 13373:2020

6.6 Measurement of the straightness of arrises 19
6.6.1 Principle 19
6.6.2 Apparatus 20
6.6.3 Measurement procedure 20
6.6.4 Expression of the results 21
6.7 Measurement of the squareness of visible faces 21
6.7.1 Principle 21
6.7.2 Angular measurement 21
6.7.3 Measurement in percentage 23
6.8 Measurement of the squareness of edges 25
6.8.1 Principle 25
6.8.2 Apparatus 26
6.8.3 Measurement procedure 26
6.8.4 Expression of the results 28
6.9 Measurement of the shape of non-rectangular elements 28
6.9.1 Principle 28
6.9.2 Apparatus 29
6.9.3 Measurement procedure 29

7 Measurement of the dimensions and other geometric characteristics of finished products with cleft / riven / hewn edges 31
7.1 Measurement of dimensions 31
7.2 Measurement of thickness and surface irregularities 32
7.3 Measurement of undercut and overcut 32
7.3.1 General 32
7.3.2 Apparatus 32
7.3.3 Measurement procedure 32
7.3.4 Expression of the results 33
7.4 Measurement of the flatness 33
7.5 Measurement of the straightness 33
7.6 Measurement of the squareness of seen face 33

8 Measurement of the shape of non-rectangular elements 33

9 Measurement of the geometrical characteristics of fixing holes of slabs for cladding 34
9.1 Principle 34
9.2 Depth of the hole 34
9.2.1 Apparatus 34
9.2.2 Measurement procedure 34
9.2.3 Expression of the results 34
9.3 Position of the hole 35
9.3.1 Apparatus 35
9.3.2 Measurement procedure 35
9.3.3 Expression of the results 35
9.4 Diameter of the hole 35
9.4.1 Apparatus 35
9.4.2 Measurement procedure 35
9.4.3 Expression of the results 35
9.5 Inclination of the hole 35
9.5.1 Apparatus 35
9.5.2 Measurement procedure 35
9.5.3 Expression of the results 36

10 Test report 36

Bibliography 38

Documents
Document Sharing Hub

Full document details: BS EN 13373:2020

European foreword

This document (EN 13373:2020) has been prepared by Technical Committee CEN/TC 246 “Natural stones”, the secretariat of which is held by UNI.

This European Standard shall be given the status of a national standard, either by publication of an identical text or by endorsement, at the latest by July 2020, and conflicting national standards shall be withdrawn at the latest by July 2020.

Attention is drawn to the possibility that some of the elements of this document may be the subject of patent rights. CEN shall not be held responsible for identifying any or all such patent rights.

This document supersedes EN 13373:2003.

The significant changes with respect to the previous edition are listed below:

— figures have been revised;

— editorial changes have been made.

According to the CEN-CENELEC Internal Regulations, the national standards organisations of the following countries are bound to implement this European Standard: Austria, Belgium, Bulgaria, Croatia, Cyprus, Czech Republic, Denmark, Estonia, Finland, France, Germany, Greece, Hungary, Iceland, Ireland, Italy, Latvia, Lithuania, Luxembourg, Malta, Netherlands, Norway, Poland, Portugal, Republic of North Macedonia, Romania, Serbia, Slovakia, Slovenia, Spain, Sweden, Switzerland, Turkey and the United Kingdom.

Documents
Document Sharing Hub
Full document details: BS EN 13373:2020

1 Scope

This document describes methods for verifying the geometric characteristics of products of natural stone such as rough blocks, rough slabs, finished products for cladding, flooring, stairs and modular tiles and paving units (slabs, setts and kerbs). These methods can be applied in the case of a dispute between two parties, they are not compulsory for production control.

Other measuring equipment can be used as long as their precision can be demonstrated to be equal or better than the ones mentioned here.

It is essential that all weighing, measuring and testing equipment are calibrated or retraceable to measurement standards and regularly inspected according to documented procedures, frequencies and criteria. It is important that the expression of the dimensional characteristics is in accordance with the appropriate class of the measured product.

2 Normative references

There are no normative references in this document.

3 Terms and definitions

No terms and definitions are listed in this document.

ISO and IEC maintain terminological databases for use in standardization at the following addresses:

— IEC Electropedia: available at http://www.electropedia.org/

— ISO Online browsing platform: available at http://www.iso.org/obp

4 Measurement of the dimensions of squared rough blocks

4.1 Measurement of the gross dimensions of squared rough blocks

4.1.1 Principle

Measurement of the dimensions of the smallest rectangular cuboid with straight edges that contains a rough block.

4.1.2 Apparatus

— A rigid ruler of appropriate length graduated in 0,01 m.

4.1.3 Measurement procedure

The gross length x_{gross}, the gross width y_{gross} and the gross height z_{gross} of the block are measured in the following manner:

— Define the smallest cuboid that can encompass the rough block.

— Estimate by projection the gross dimensions of the block x_{gross}, y_{gross} and z_{gross} (see Figure 1).

— Take measurements expressed in metres to the nearest 0,01 m at i places (minimum 3) for each direction x_i, y_i, z_i where visually the largest dimensions occur.

Documents
Document Sharing Hub
Full document details: BS EN 13373:2020

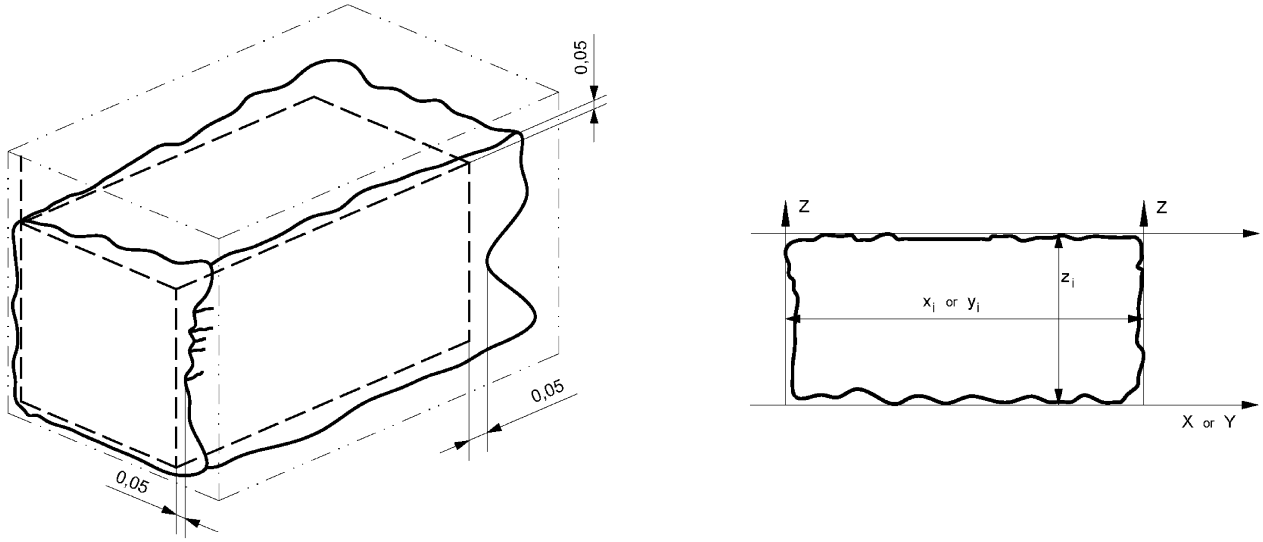

Figure 1 — Measurement of the gross length x_{gross} (or of the gross width y_{gross}) of a face of a rough block

4.1.4 Expression of the results

The average gross dimension is expressed for each direction to the nearest 0,01 m.

4.2 Measurement of net dimensions of rough blocks

4.2.1 Principle

Measurement of the dimensions of the largest rectangular cuboid with straight edges that can be inscribed within a rough block.

4.2.2 Apparatus

— A rigid ruler of appropriate size graduated in 1 mm.

4.2.3 Measurement procedure

The net length x_{net}, the net width y_{net} and the net height z_{net} of the block are measured in the following manner:

— Define the largest cuboid that can still be inscribed within the rough block.

— Estimate and trace the net dimensions of the block x_{net}, y_{net} and z_{net} (see Figure 2).

Documents
Document Sharing Hub
Full document details: BS EN 13373:2020

— Take measurements expressed in metres to the nearest 0,01 m at i places (minimum 3) for each direction x_i, y_i, z_i where visually the smallest dimensions occur.

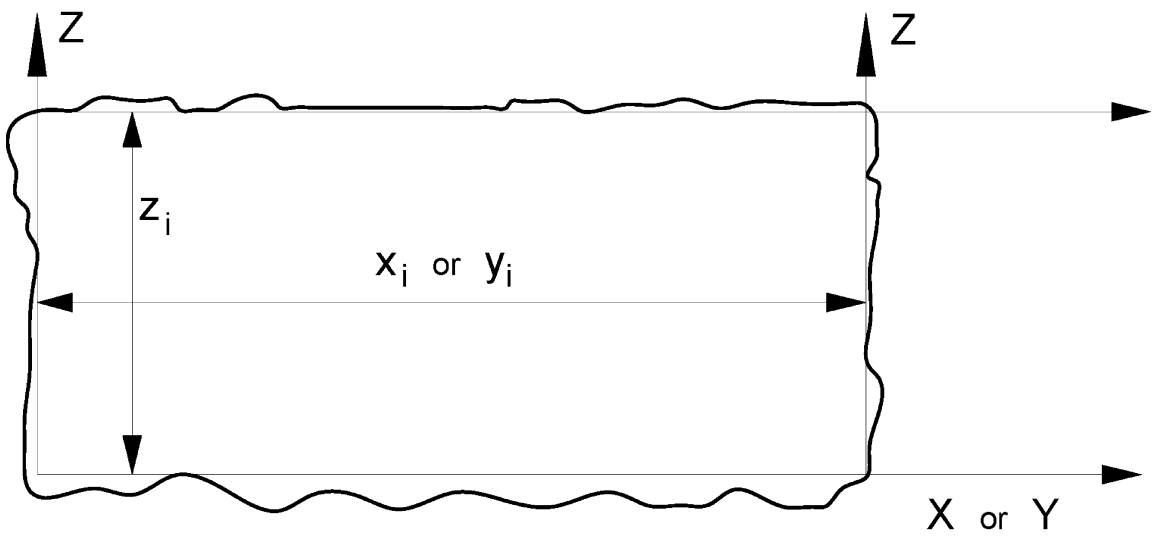

Figure 2 — Measurement of the net length x_{net} (or of the net width y_{net}) of a face of a rough block

4.2.4 Expression of the results

The average net dimension is expressed for each direction to the nearest 0,01 m.

5 Measurement of the dimensions of rough slabs

5.1 Measurement of the gross in-plane dimensions of rough slabs

5.1.1 Principle

Measurement of the dimensions of the smallest rectangle that contains a slab.

5.1.2 Apparatus

— A rigid ruler of appropriate size graduated in 0,001 m.

Documents
Document Sharing Hub
Full document details: BS EN 13373:2020

5.1.3 Measurement procedure

The gross length x_{gross} and the gross width z_{gross} of the slab are measured in the following manner:

— Define the smallest rectangle that can encompass the rough slab.

— Estimate by projection the gross dimensions of the slab x_{gross} and z_{gross} (see Figure 3).

— Take measurements expressed in metres to the nearest 0,01 m at i places (minimum 3) for each direction x_i and z_i where visually the largest dimensions occur.

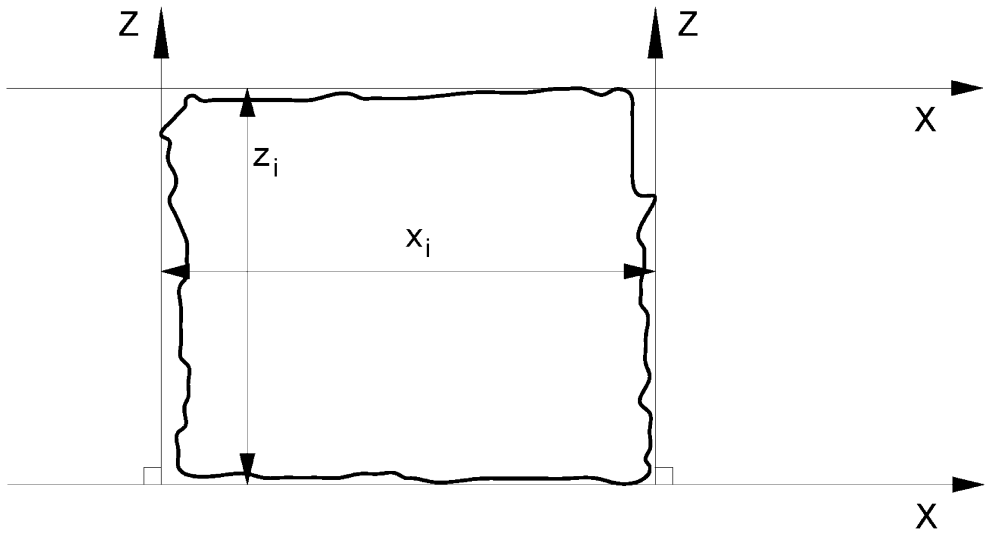

Figure 3 — Measurement of the gross length x_{gross} and gross width z_{gross} of a rough slab

5.1.4 Expression of the results

The average gross dimension is expressed for each direction to the nearest 0,01 m.

5.2 Measurement of the net in-plane dimensions of rough slabs

5.2.1 Principle

Measurement of the dimensions of the largest rectangle that can be inscribed within a slab.

5.2.2 Apparatus

— A rigid ruler of appropriate size graduated in 0,001 m.

Documents
Document Sharing Hub
Full document details: BS EN 13373:2020

5.2.3 Measurement procedure

— The net length x_{net} and the net height z_{net} of the slab are measured in the following manner:

— Define the largest rectangle that can still be inscribed within the rough slab.

— Estimate and trace the net dimensions of the slab x_{net} and z_{net} (see Figure 4).

— Take measurements expressed in metres to the nearest 0,01 m at i places (minimum 3) for each direction x_i and z_i where visually the smallest dimensions occur.

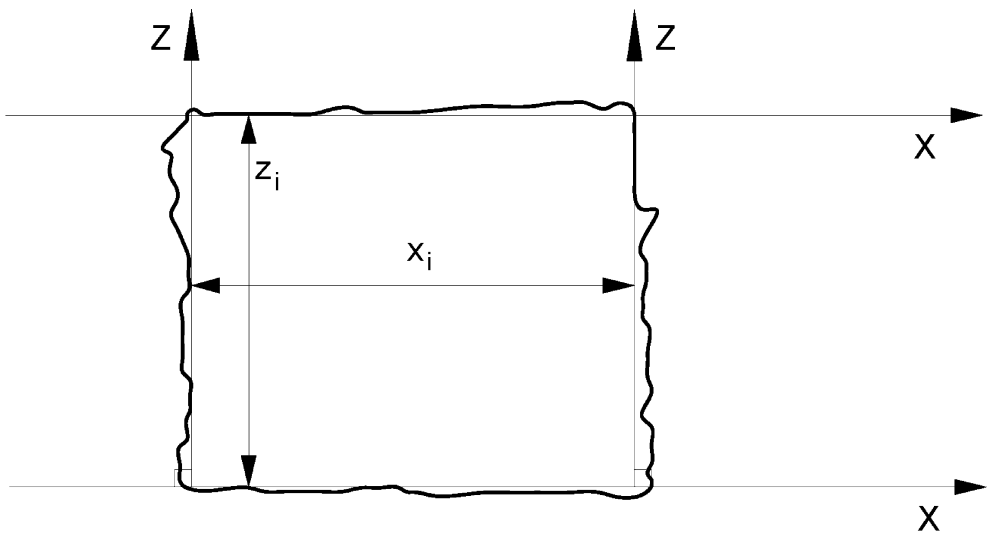

Figure 4 — Measurement of the net length X_{net} and the net width Z_{net} of a rough slab

5.2.4 Expression of the results

The average net dimension is expressed for each direction to the nearest 0,01 m.

5.3 Measurement of the thickness of a rough slab

See 6.4 (Measurement of the thickness and surface irregularities of finished products with sawn edges) or 7.2 (Measurement of thickness and surface irregularities).

5.4 Measurement of the flatness of a rough slab

See 6.5.

Documents
Document Sharing Hub
Full document details: BS EN 13373:2020

6 Measurement of the dimensions and measurement of other geometric characteristics of finished products with sawn edges

6.1 Principle

Measurement of the length, width and other dimension of rectangular elements with sawn edges.

6.2 Apparatus

— A measurement device with a measuring range of at least the largest dimension of the measured element and with the precision given by Table 1.

Table 1 — Measurement precision of the device

Tolerance on the dimension being measured mm	**Measuring precision** mm
< 1	0,1
≥ 1 and < 5	0,1
≥ 5	0,5

If the tolerance class of the dimension being measured is not known then the measuring precision of the device shall be not more than 0,1 mm.

6.3 Measurement of in-plane dimensions of finished products with sawn edges

6.3.1 Measurement procedure

All the measurements shall be recorded according to Table 1. For the length and width, measurements per visible face are taken according to Figure 5 and the following requirements:

— At least 1 measurement at the centre if dimension ≤ 70 mm

— At least 2 measurements (at 1/3 and 2/3) if dimension > 70 mm and ≤ 600 mm

— At least 3 measurements (see Figure 5) if dimension > 600 mm

Documents
Document Sharing Hub
Full document details: BS EN 13373:2020

Dimensions in millimetres

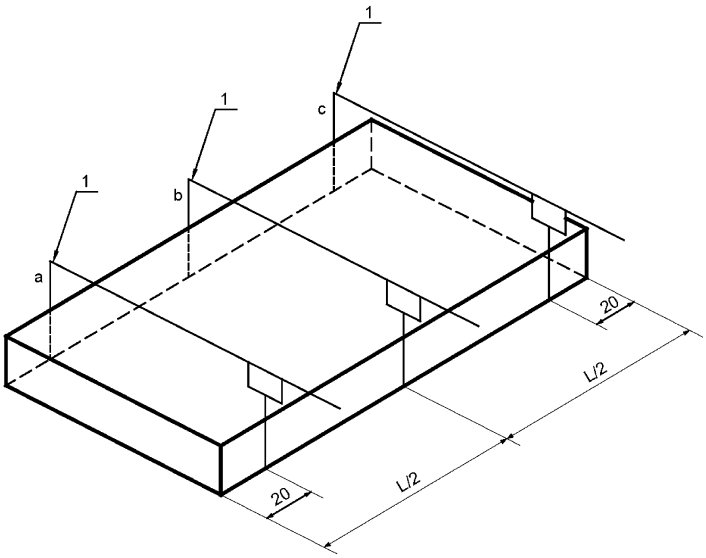

Key

1 measuring device as described in 6.2

L length of the element

Figure 5 — Measurement of the length of finished products at 3 points (for L > 600 mm)

6.3.2 Expression of the results

The average dimension is expressed for each direction at 1 mm.

6.4 Measurement of the thickness and surface irregularities of finished products with sawn edges

6.4.1 Measurement of the rough thickness

All the measurements shall be recorded according to Table 1. For each side, the thickness is measured according to Figure 6 and the following requirements:

— At least 1 measurement at the centre if dimension ≤ 120 mm

— At least 2 measurements (at 1/3 and 2/3) if dimension > 120 and ≤ 600 mm

— At least 3 measurements (see Figure 6) if dimension > 600 mm

Documents
Document Sharing Hub

Full document details: BS EN 13373:2020