BS EN 134:2024

BSI Standards Publication

Respiratory protective devices — Nomenclature of component

Documents
Document Sharing Hub

Full document details: BS EN 134:2024

National foreword

This British Standard is the UK implementation of EN 134:2024. It supersedes BS EN 134:1998, which is withdrawn.

The UK participation in its preparation was entrusted to Technical Committee PH/4, Respiratory protection.

A list of organizations represented on this committee can be obtained on request to its committee manager.

Contractual and legal considerations

This publication has been prepared in good faith, however no representation, warranty, assurance or undertaking (express or implied) is or will be made, and no responsibility or liability is or will be accepted by BSI in relation to the adequacy, accuracy, completeness or reasonableness of this publication. All and any such responsibility and liability is expressly disclaimed to the full extent permitted by the law.

This publication is provided as is, and is to be used at the recipient's own risk.

The recipient is advised to consider seeking professional guidance with respect to its use of this publication.

This publication is not intended to constitute a contract. Users are responsible for its correct application.

© The British Standards Institution 2024
Published by BSI Standards Limited 2024

ISBN 978 0 539 12485 9

ICS 01.040.13; 13.340.30

Compliance with a British Standard cannot confer immunity from legal obligations.

This British Standard was published under the authority of the Standards Policy and Strategy Committee on 31 March 2024.

Amendments/corrigenda issued since publication

Date	Text affected

Documents
Document Sharing Hub

Full document details: BS EN 134:2024

EUROPEAN STANDARD

NORME EUROPÉENNE

EUROPÄISCHE NORM

EN 134

March 2024

ICS 13.340.30

Supersedes EN 134:1998

English Version

Respiratory protective devices - Nomenclature of components

Appareils de protection respiratoire - Nomenclature des composants

Atemschutzgeräte - Benennungen von Einzelteilen

This European Standard was approved by CEN on 3 March 2023.

CEN members are bound to comply with the CEN/CENELEC Internal Regulations which stipulate the conditions for giving this European Standard the status of a national standard without any alteration. Up-to-date lists and bibliographical references concerning such national standards may be obtained on application to the CEN-CENELEC Management Centre or to any CEN member.

This European Standard exists in three official versions (English, French, German). A version in any other language made by translation under the responsibility of a CEN member into its own language and notified to the CEN-CENELEC Management Centre has the same status as the official versions.

CEN members are the national standards bodies of Austria, Belgium, Bulgaria, Croatia, Cyprus, Czech Republic, Denmark, Estonia, Finland, France, Germany, Greece, Hungary, Iceland, Ireland, Italy, Latvia, Lithuania, Luxembourg, Malta, Netherlands, Norway, Poland, Portugal, Republic of North Macedonia, Romania, Serbia, Slovakia, Slovenia, Spain, Sweden, Switzerland, Türkiye and United Kingdom.

EUROPEAN COMMITTEE FOR STANDARDIZATION
COMITÉ EUROPÉEN DE NORMALISATION
EUROPÄISCHES KOMITEE FÜR NORMUNG

CEN-CENELEC Management Centre: Rue de la Science 23, B-1040 Brussels

© 2024 CEN All rights of exploitation in any form and by any means reserved worldwide for CEN national Members.

Ref. No. EN 134:2024 E

Documents
Document Sharing Hub

Full document details: BS EN 134:2024

Contents

Page

European foreword 3
1 Scope 4
2 Normative references 4
3 Terms and definitions 4
Bibliography 25

Documents
Document Sharing Hub
Full document details: BS EN 134:2024

European foreword

This document (EN 134:2024) has been prepared by Technical Committee CEN/TC 79 “Respiratory protective devices”, the secretariat of which is held by DIN.

This European Standard shall be given the status of a national standard, either by publication of an identical text or by endorsement, at the latest by September 2024, and conflicting national standards shall be withdrawn at the latest by September 2024.

Attention is drawn to the possibility that some of the elements of this document may be the subject of patent rights. CEN shall not be held responsible for identifying any or all such patent rights.

This document supersedes EN 134:1998.

The main changes compared to the previous edition are listed below:

— keys have been updated.

Any feedback and questions on this document should be directed to the users’ national standards body. A complete listing of these bodies can be found on the CEN website.

According to the CEN-CENELEC Internal Regulations, the national standards organisations of the following countries are bound to implement this European Standard: Austria, Belgium, Bulgaria, Croatia, Cyprus, Czech Republic, Denmark, Estonia, Finland, France, Germany, Greece, Hungary, Iceland, Ireland, Italy, Latvia, Lithuania, Luxembourg, Malta, Netherlands, Norway, Poland, Portugal, Republic of North Macedonia, Romania, Serbia, Slovakia, Slovenia, Spain, Sweden, Switzerland, Türkiye and the United Kingdom.

Documents
Document Sharing Hub
Full document details: BS EN 134:2024

1 Scope

This document specifies the nomenclature for typical components of respiratory protective devices. It does not specify which or how many components are used and where they are located in the apparatus.

The illustrations used are given as examples only for the identification of the different parts and the corresponding terms for facilitating the application. The terms and definitions used are given in EN ISO 16972:2020 and EN 135:1998.

The terms are given in the three official CEN languages.

2 Normative references

The following documents are referred to in the text in such a way that some or all of their content constitutes requirements of this document. For dated references, only the edition cited applies. For undated references, the latest edition of the referenced document (including any amendments) applies.

EN 135:1998, *Respiratory protective devices — List of equivalent terms*

EN ISO 16972:2020, *Respiratory protective devices — Vocabulary and graphical symbols (ISO 16972:2020)*

3 Terms and definitions

For the purposes of this document, the terms and definitions given in EN ISO 16972:2020 and EN 135:1998 and the following apply.

ISO and IEC maintain terminology databases for use in standardization at the following addresses:

— ISO Online browsing platform: available at https://www.iso.org/obp

— IEC Electropedia: available at https://www.electropedia.org/

Documents
Document Sharing Hub

Full document details: BS EN 134:2024

3.1	**facepiece**	**pièces faciales**	**Atemanschlüsse**
3.1.1	**full face mask (EN 136)**	**masque complet (EN 136)**	**Vollmaske (EN 136)**

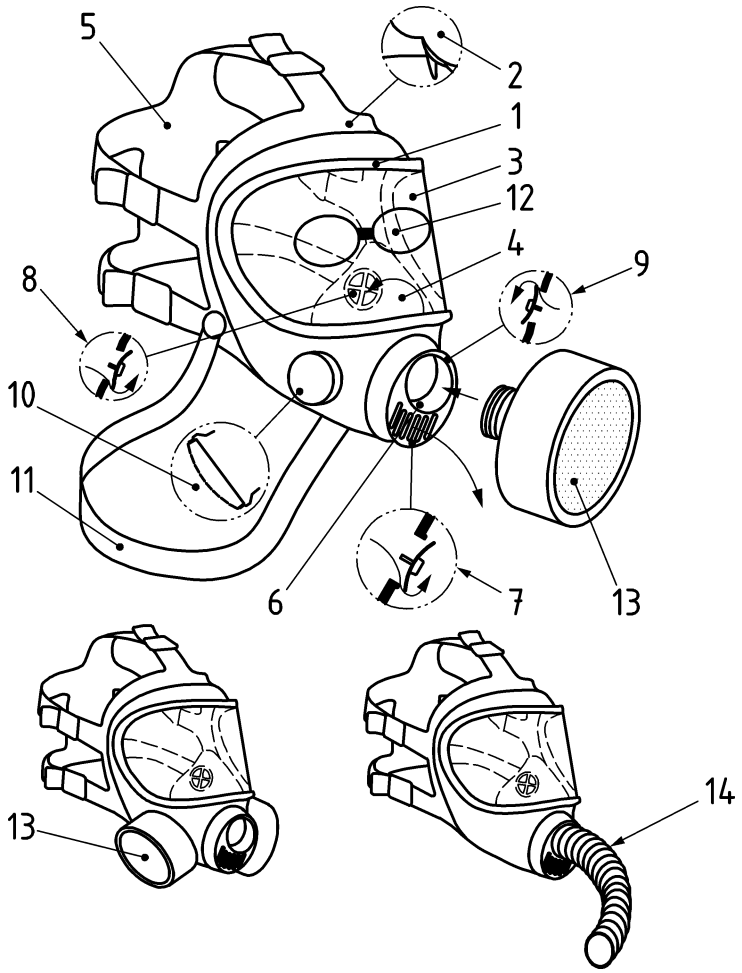

Key

1	faceblank	1	jupe de masque	1	Maskenkörper
2	facepiece seal	2	joint facial	2	Maskendichtrahmen
3	visor	3	oculaire	3	Sichtscheibe
4	inner mask	4	masque intérieur	4	Innenmaske
5	head harness	5	jeu de brides	5	Kopfbänderung
6	equipment connector	6	raccord à l'équipement	6	Geräteanschlussstück
7	exhalation valve	7	soupape expiratoire	7	Ausatemventil
8	check valve	8	soupape inspiratoire du masque intérieur	8	Steuerventil
9	inhalation valve	9	soupape inspiratoire	9	Einatemventil
10	speech diaphragm	10	membrane phonique	10	Sprechmembran
11	carrying strap	11	bretelle de transport	11	Trageband
12	(spectacles)	12	(lunettes)	12	(Maskenbrille)
13	filter	13	filtre	13	Filter
14	breathing hose	14	tuyau respiratoire	14	Atemschlauch

Figure 1

AVA Documents
Document Sharing Hub

Full document details: BS EN 134:2024

3.1.2	**half mask** **quarter mask** **(EN 140)**	**demi-masque** **quart de masque** **(EN 140)**	**Halbmaske** **Viertelmaske** **(EN 140)**

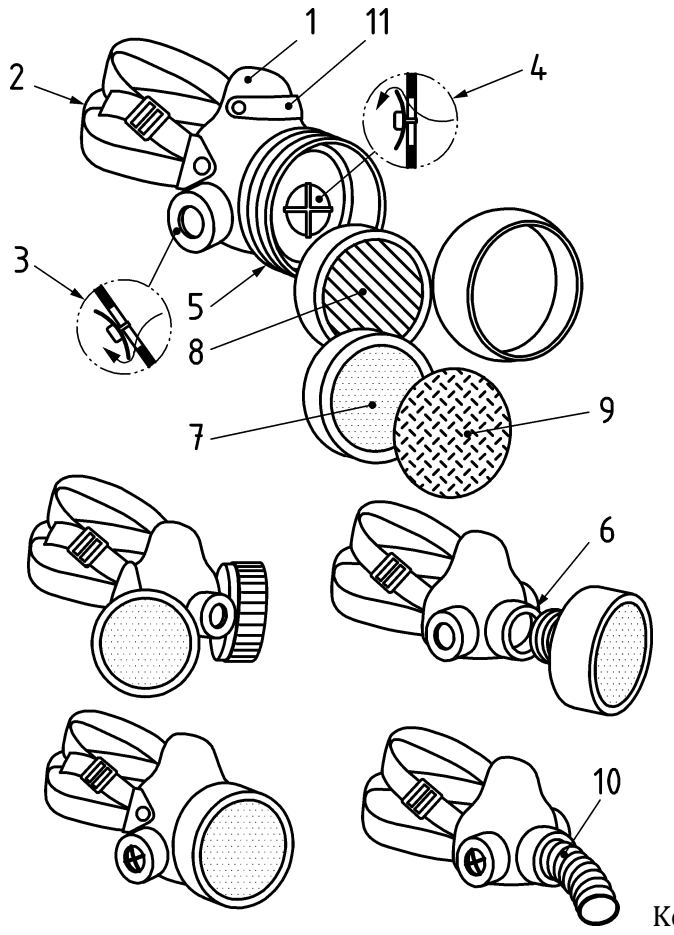

Key

1	faceblank	1	jupe de masque	1	Maskenkörper
2	head harness	2	jeu de brides	2	Kopfbänderung
3	exhalation valve	3	soupape expiratoire	3	Ausatemventil
4	inhalation valve	4	soupape inspiratoire	4	Einatemventil
5	filter housing	5	boîtier de filtre	5	Filteraufnahme
6	equipment connector	6	raccord à l'équipement	6	Geräteanschlußstück
7	particle filter (EN 143)	7	filtre à particules (EN 143)	7	Partikelfilter (EN 143)
8	gas filter (EN 14387)	8	filtre anti-gaz (EN 14387)	8	Gasfilter (EN 14387)
9	prefilter	9	préfiltre	9	Vorfilter
10	breathing hose	10	tuyau respiratoire	10	Atemschlauch
11	nosepiece	11	barrette nasale	11	Nasenbügel

Figure 2

Documents
Document Sharing Hub
Full document details: BS EN 134:2024

3.1.3	**mouthpiece assembly for filtering devices and open- circuit breathing apparatus (EN 142)**	**ensemble embout buccal pour appareils filtrants et appareils de protection respiratoire à circuit ouvert (EN 142)**	**Mundstückgarnitur für Filter-, Schlauch-und Behältergeräte (EN 142)**

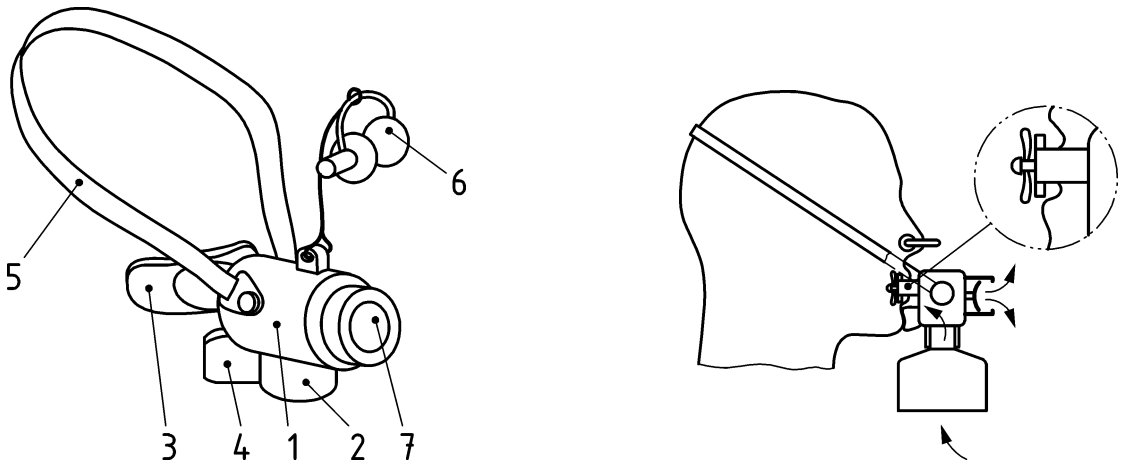

Key

1	mouthpiece body	1	corps d'embout buccal	1	Mundstückkörper
2	equipment connector	2	raccord à l'équipement	2	Geräteanschlussstück
3	mouthpiece	3	embout buccal	3	Mundstück
4	chin support	4	mentonnière	4	Kinnstütze
5	head harness	5	jeu de brides	5	Kopfbänderung
6	nose clip	6	pince-nez	6	Nasenklemme
7	exhalation valve	7	soupape expiratoire	7	Ausatemventil

Figure 3

Documents
Document Sharing Hub
Full document details: BS EN 134:2024