BS EN 13480-4:2024

BSI Standards Publication

Metallic industrial piping

Part 4: Fabrication and installation

Documents
Document Sharing Hub

Full document details: BS EN 13480-4:2024

National foreword

This British Standard is the UK implementation of EN 13480-4:2024. It supersedes BS EN 13480-4:2017+A2:2023, which is withdrawn.

The UK participation in its preparation was entrusted to Technical Committee PVE/10, Piping systems.

A list of organizations represented on this committee can be obtained on request to its committee manager.

Contractual and legal considerations

This publication has been prepared in good faith, however no representation, warranty, assurance or undertaking (express or implied) is or will be made, and no responsibility or liability is or will be accepted by BSI in relation to the adequacy, accuracy, completeness or reasonableness of this publication. All and any such responsibility and liability is expressly disclaimed to the full extent permitted by the law.

This publication is provided as is, and is to be used at the recipient's own risk.

The recipient is advised to consider seeking professional guidance with respect to its use of this publication.

This publication is not intended to constitute a contract. Users are responsible for its correct application.

This publication has been prepared under a mandate given to the European Standards Organizations by the European Commission and the European Free Trade Association. It is intended to support requirements of the EU legislation detailed in the European Foreword. A European Annex, usually Annex ZA or ZZ, describes how this publication relates to that EU legislation.

For the Great Britain market (England, Scotland and Wales), if UK Government has designated this publication for conformity with UKCA marking (or similar) legislation, it may contain an additional National Annex. Where such a National Annex exists, it shows the correlation between this publication and the relevant UK legislation. If there is no National Annex of this kind, the relevant Annex ZA or ZZ in the body of the European text will indicate the relationship to UK regulation applicable in Great Britain. References to EU legislation may need to be read in accordance with the UK designation and the applicable UK law. Further information on designated standards can be found at www.bsigroup.com/standardsandregulation.

For the Northern Ireland market, UK law will continue to implement relevant EU law subject to periodic confirmation. Therefore Annex ZA/ZZ in the European text, and references to EU legislation, are still valid for this market.

UK Government is responsible for legislation. For information on legislation and policies relating to that legislation, consult the relevant pages of www.gov.uk.

© The British Standards Institution 2024
Published by BSI Standards Limited 2024

ISBN 978 0 539 33029 8

AVA Documents
Document Sharing Hub

Full document details: BS EN 13480-4:2024

ICS 23.040.01

Compliance with a British Standard cannot confer immunity from legal obligations.

This British Standard was published under the authority of the Standards Policy and Strategy Committee on 31 August 2024.

Amendments/corrigenda issued since publication

Date	Text affected

Documents
Document Sharing Hub

Documents
Document Sharing Hub

EUROPEAN STANDARD

NORME EUROPÉENNE

EUROPÄISCHE NORM

EN 13480-4

July 2024

ICS 23.040.01

Supersedes EN 13480-4:2017

English Version

Metallic industrial piping - Part 4: Fabrication and installation

Tuyauteries industrielles métalliques - Partie 4: Fabrication et installation

Metallische industrielle Rohrleitungen - Teil 4: Fertigung und Verlegung

This European Standard was approved by CEN on 9 July 2024.

CEN members are bound to comply with the CEN/CENELEC Internal Regulations which stipulate the conditions for giving this European Standard the status of a national standard without any alteration. Up-to-date lists and bibliographical references concerning such national standards may be obtained on application to the CEN-CENELEC Management Centre or to any CEN member.

This European Standard exists in three official versions (English, French, German). A version in any other language made by translation under the responsibility of a CEN member into its own language and notified to the CEN-CENELEC Management Centre has the same status as the official versions.

CEN members are the national standards bodies of Austria, Belgium, Bulgaria, Croatia, Cyprus, Czech Republic, Denmark, Estonia, Finland, France, Germany, Greece, Hungary, Iceland, Ireland, Italy, Latvia, Lithuania, Luxembourg, Malta, Netherlands, Norway, Poland, Portugal, Republic of North Macedonia, Romania, Serbia, Slovakia, Slovenia, Spain, Sweden, Switzerland, Türkiye and United Kingdom.

EUROPEAN COMMITTEE FOR STANDARDIZATION
COMITÉ EUROPÉEN DE NORMALISATION
EUROPÄISCHES KOMITEE FÜR NORMUNG

CEN-CENELEC Management Centre: Rue de la Science 23, B-1040 Brussels

© 2024 CEN All rights of exploitation in any form and by any means reserved worldwide for CEN national Members.

Ref. No. EN 13480-4:2024 E

Documents
Document Sharing Hub

Full document details: BS EN 13480-4:2024

Contents

Page

European foreword ... 5
1 Scope ... 7
2 Normative references ... 7
3 Terms and definitions ... 8
4 Symbols ... 9
5 General ... 9
5.1 Requirements on the manufacturer ... 9
5.2 Requirements on fabricators and installers of piping and supports ... 9
5.3 Requirements for fabrication and installation ... 9
5.4 Classification of piping ... 10
5.5 Material grouping ... 10
5.6 Tolerances ... 10
6 Cutting and bevelling ... 10
6.1 General ... 10
6.2 Identification of pressure parts ... 10
7 Bending and other forming ... 11
7.1 General ... 11
7.2 Heat treatment after cold forming ... 13
7.2.1 Flat products ... 13
7.2.2 Pipes ... 13
7.3 Heat treatment after hot forming ... 15
7.3.1 Material groups 1, 3, 4, 5 and 6 ... 15
7.3.2 Material groups 8.1 and 8.2 ... 15
7.3.3 Heat treatment after hot forming for material group 10 ... 17
7.3.4 Heat treatment after hot forming for clad materials ... 17
7.4 Tolerances ... 17
7.4.1 Out-of-roundness of bends under internal pressure equal to, or greater than, the external pressure ... 17
7.4.2 Out-of-roundness of bends under external pressure and vacuum ... 18
7.4.3 Waves at bends ... 18
7.4.4 Start-up bulge of induction bends ... 19
7.5 Surface finish ... 19
8 Installation of piping ... 19
8.1 Fixing and alignment ... 19
8.2 Field run piping ... 20
8.3 Flanged or similar mechanical connections ... 21
8.3.1 Flange connections ... 21
8.3.2 Threaded connections ... 22
8.3.3 Couplings and compression fittings ... 22
8.4 Protection of ends of piping components ... 22
9 Welding ... 22
9.1 Welding personnel ... 22
9.2 Welding procedure specifications ... 22
9.3 Welding procedures ... 23
9.3.1 Verification of suitability ... 23

AVA Documents
Document Sharing Hub
Full document details: BS EN 13480-4:2024

9.3.2 Application ... 24
9.4 Filler metals and auxiliary materials ... 24
9.5 Climatic conditions ... 24
9.6 Cleaning before and after welding ... 24
9.7 Joint preparation ... 25
9.8 Edge protection ... 25
9.9 Assembly for welding ... 25
9.10 Earthing ... 25
9.11 Performance of welding ... 26
9.11.1 Preheating ... 26
9.11.2 Striking marks ... 26
9.11.3 External welds ... 26
9.11.4 Dissimilar joints ... 26
9.12 Backing rings ... 26
9.13 Attachments ... 27
9.13.1 General ... 27
9.13.2 Temporary attachments ... 27
9.13.3 Permanent attachments ... 27
9.14 Post-weld heat treatment ... 27
9.14.1 General ... 27
9.14.2 Equipment ... 31
9.14.3 Temperature measurements ... 31
9.14.4 Controlling thickness ... 31
9.14.5 Rate of heating ... 33
9.14.6 Local heat treatment ... 33
9.14.7 Insulation ... 34
9.15 Weld identification ... 34

10 Adjustment and repair ... 34
10.1 General ... 34
10.2 Adjustment ... 34
10.2.1 Cold hammering ... 34
10.2.2 Adjustments by means of heat ... 34
10.2.3 Adjustment by welding ... 35
10.2.4 Adjustment by local forging ... 35
10.3 Weld repair ... 35

11 Marking and documentation ... 35
11.1 Marking of spools and components for installation ... 35
11.2 Marking and identification of installed piping ... 35
11.2.1 General ... 35
11.2.2 CE Marking of installed piping ... 36
11.2.3 Technical identification of installed piping ... 36

12 Additional requirements ... 37
12.1 Cleaning ... 37
12.2 Temporary preservation ... 37
12.3 External corrosion protection ... 37
12.4 Thermal and acoustic insulation ... 37
12.5 Connections for static electricity ... 38

Annex A (informative) Contamination and surface quality of stainless steel ... 39
A.1 Introduction ... 39
A.2 Protection ... 39
A.2.1 Handling ... 39
A.2.2 During fabrication and installation ... 39
A.3 Controlled cleaning methods ... 40

AVA Documents
Document Sharing Hub

Full document details: BS EN 13480-4:2024

A.4 Chemical treatments ... **40**
A.4.1 Acid pickling ... **40**
A.4.2 Decontamination, passivation ... **40**
A.5 Preparing for shipment ... **41**

Annex B (normative) **Dimensional tolerances for fabricated spools** ... **42**

Annex C (informative) **Example for the extension of the P value** ... **44**

Annex Y (informative) **History of EN 13480-4** ... **46**
Y.1 Differences between EN 13480-4:2017 and EN 13480-4:2024 ... **46**

Annex ZA (informative) **Relationship between this European Standard and the Essential Requirements of EU Directive 2014/68/EU aimed to be covered** ... **47**

Bibliography ... **49**

Documents
Document Sharing Hub
Full document details: BS EN 13480-4:2024

European foreword

This document (EN 13480-4:2024) has been prepared by Technical Committee CEN/TC 267 "Industrial piping and pipelines", the secretariat of which is held by AFNOR.

This European Standard shall be given the status of a national standard, either by publication of an identical text or by endorsement, at the latest by December 2024, and conflicting national standards shall be withdrawn at the latest by December 2024.

Attention is drawn to the possibility that some of the elements of this document may be the subject of patent rights. CEN shall not be held responsible for identifying any or all such patent rights.

This document supersedes EN 13480-4:2017.

This new edition incorporates the Amendments which have been approved previously by CEN members, and the corrected pages up to Issue 1 without any further technical change. Annex Y provides details of significant technical changes between this European Standard and the previous edition.

This document has been prepared under a standardization request addressed to CEN by the European Commission. The Standing Committee of the EFTA States subsequently approves these requests for its Member States.

For the relationship with EU Legislation, see informative Annex ZA, which is an integral part of this document.

This European Standard EN 13480 for metallic industrial piping consists of eight interdependent and not dissociable Parts which are:

- *Part 1: General;*
- *Part 2: Materials;*
- *Part 3: Design and calculation;*
- *Part 4: Fabrication and installation;*
- *Part 5: Inspection and testing;*
- *Part 6: Additional requirements for buried piping;*
- *CEN/TR 13480-7, Guidance on the use of conformity assessment procedures;*
- *Part 8: Additional requirements for aluminium and aluminium alloy piping.*

Although these Parts may be obtained separately, it should be recognized that the Parts are inter-dependant. As such the manufacture of metallic industrial piping requires the application of all the relevant Parts in order for the requirements of the Standard to be satisfactorily fulfilled.

This European Standard will be maintained by a Maintenance MHD working group whose scope of working is limited to corrections and interpretations related to EN 13480. The contact to submit queries can be found at https://unm.fr/en/maintenance-agencies/maintenance-agency-en-13480/.
A form for submitting questions can be downloaded from the link to the MHD website. After subject experts have agreed an answer, the answer will be communicated to the questioner. Interpretation sheets will be posted on the website of the MHD.

AVA Documents
Document Sharing Hub

Full document details: BS EN 13480-4:2024

Amendments to this new edition may be issued from time to time and then used immediately as alternatives to rules contained herein. These amendments will be consolidated within EN 13480:2024 in accordance with the maintenance system of EN 13480 series approved by CEN/BT Decision C172/2021.

Any feedback and questions on this document should be directed to the users' national standards body. A complete listing of these bodies can be found on the CEN website.

According to the CEN-CENELEC Internal Regulations, the national standards organizations of the following countries are bound to implement this European Standard: Austria, Belgium, Bulgaria, Croatia, Cyprus, Czech Republic, Denmark, Estonia, Finland, France, Germany, Greece, Hungary, Iceland, Ireland, Italy, Latvia, Lithuania, Luxembourg, Malta, Netherlands, Norway, Poland, Portugal, Republic of North Macedonia, Romania, Serbia, Slovakia, Slovenia, Spain, Sweden, Switzerland, Türkiye and the United Kingdom.

Documents
Document Sharing Hub

Full document details: BS EN 13480-4:2024

1 Scope

This document specifies the requirements for fabrication and installation of piping systems, including supports, designed in accordance with EN 13480-3:2024.

2 Normative references

The following documents are referred to in the text in such a way that some or all of their content constitutes requirements of this document. For dated references, only the edition cited applies. For undated references, the latest edition of the referenced document (including any amendments) applies.

EN 10204:2004, *Metallic products — Types of inspection documents*

EN 12952-5:2021, *Water-tube boilers and auxiliary installations — Part 5: Workmanship and construction of pressure parts of the boiler*

EN 13480-1:2024, *Metallic industrial piping — Part 1: General*

EN 13480-2:2024, *Metallic industrial piping — Part 2: Materials*

EN 13480-3:2024, *Metallic industrial piping — Part 3: Design and calculation*

EN 13480-5:2024, *Metallic industrial piping — Part 5: Inspection and testing*

EN ISO 3834-3:2021, *Quality requirements for fusion welding of metallic materials — Part 3: Standard quality requirements (ISO 3834-3:2021)*

EN ISO 4063:2023, *Welding, brazing, soldering and cutting — Nomenclature of processes and reference numbers (ISO 4063:2023)*

EN ISO 5817:2023, *Welding — Fusion-welded joints in steel, nickel, titanium and their alloys (beam welding excluded) — Quality levels for imperfections (ISO 5817:2023)*

EN ISO 9606-1:2017, *Qualification testing of welders — Fusion welding — Part 1: Steels (ISO 9606-1:2012, including Cor 1:2012 and Cor 2:2013)*

EN ISO 13920:1996, *Welding — General tolerances for welded constructions — Dimensions for lengths and angles — Shape and position (ISO 13920:1996)*

EN ISO 14732:2013, *Welding personnel — Qualification testing of welding operators and weld setters for mechanized and automatic welding of metallic materials (ISO 14732:2013)*

EN ISO 15609-1:2019, *Specification and qualification of welding procedures for metallic materials — Welding procedure specification — Part 1: Arc welding (ISO 15609-1:2019)*

EN ISO 15609-2:2019, *Specification and qualification of welding procedures for metallic materials — Welding procedure specification — Part 2: Gas welding (ISO 15609-2:2019)*

EN ISO 15609-3:2004, *Specification and qualification of welding procedures for metallic materials — Welding procedure specification — Part 3: Electron beam welding (ISO 15609-3:2004)*

EN ISO 15609-4:2009, *Specification and qualification of welding procedures for metallic materials — Welding procedure specification — Part 4: Laser beam welding (ISO 15609-4:2009)*

AVA Documents
Document Sharing Hub

Full document details: BS EN 13480-4:2024

EN ISO 15609-5:2011, *Specification and qualification of welding procedures for metallic materials — Welding procedure specification — Part 5: Resistance welding (ISO 15609-5:2011, Corrected version 2011-12-01)*

EN ISO 15609-6:2013, *Specification and qualification of welding procedures for metallic materials — Welding procedure specification — Part 6: Laser-arc hybrid welding (ISO 15609-6:2013)*

EN ISO 15610:2024, *Specification and qualification of welding procedures for metallic materials — Qualification based on tested welding consumables (ISO 15610:2024)*

EN ISO 15611:2024, *Specification and qualification of welding procedures for metallic materials — Qualification based on previous welding experience (ISO 15611:2024)*

EN ISO 15612:2018, *Specification and qualification of welding procedures for metallic materials — Qualification by adoption of a standard welding procedure specification (ISO 15612:2018)*

EN ISO 15613:2004, *Specification and qualification of welding procedures for metallic materials — Qualification based on pre-production welding test (ISO 15613:2004)*

EN ISO 15614-1:2017,[1] *Specification and qualification of welding procedures for metallic materials - Welding procedure test - Part 1: Arc and gas welding of steels and arc welding of nickel and nickel alloys (ISO 15614-1:2017)*

EN ISO 17663:2009, *Welding — Quality requirements for heat treatment in connection with welding and allied processes (ISO 17663:2009)*

CEN ISO/TR 15608:2017, *Welding — Guidelines for a metallic materials grouping system (ISO/TR 15608:2017)*

3 Terms and definitions

For the purposes of this document, the terms and definitions given in EN 13480-1:2024 and the following apply.

3.1
field run piping
piping installed without preplanning by drawings of the piping routing and the support points

Note 1 to entry: Typical dimensions are DN 50 or smaller.

3.2
spool (with or without overlength)
prefabricated assembly of components which forms part of a piping system

3.3
cold forming
forming at ambient temperature, but not below + 5 °C

3.4
hot forming
for ferritic steels, forming at temperatures at or above the maximum permissible temperature for post-weld heat treatment; for austenitic and austenitic-ferritic steels at temperatures above 300 °C

[1] As impacted by EN ISO 15614-1:2017/A1:2019.

Documents
Document Sharing Hub
Full document details: BS EN 13480-4:2024

4 Symbols

For the purposes of this document, the symbols given in EN 13480-1:2024 apply. Additional symbols are defined in appropriate clauses of this Part.

5 General

5.1 Requirements on the manufacturer

The manufacturer shall be responsible for the fabrication and the installation, even if this work will be sub-contracted to other fabricators and/or installers.

5.2 Requirements on fabricators and installers of piping and supports

5.2.1 The fabricators and/or installers shall ensure the correct transport, handling, storage, fabrication, installation and testing of all piping components including supports.

5.2.2 The fabricators and installers shall have access to facilities which enable them to handle the piping components including supports correctly and to carry out the required tests.

5.2.3 The fabricators and/or installers shall employ their own responsible supervisors and competent personnel. If sub-contractors are employed, the fabricator and/or installer remain responsible for their competence and the compliance with this European Standard.

NOTE The task and responsibilities of a welding co-ordinator are described in EN ISO 14731:2019.

5.2.4 All stages of fabrication and installation shall be supervised in such a way as to maintain the design integrity of the finished system.

5.2.5 Co-ordination between those responsible for design and those responsible for fabrication and/or installation and testing shall be maintained at all times, to ensure that fabrication, installation and testing is carried out in accordance with the design specification.

5.2.6 The fabricator and/or installer of the piping shall fulfil the requirements of EN ISO 3834-3:2021.

5.3 Requirements for fabrication and installation

5.3.1 Prior to any operation, a check shall be made to ensure that the spools and components supplied are in accordance with the relevant documents (specifications, drawings, certificates etc.).

5.3.2 Prefabricated spools and components shall be protected during handling, transport, and storage.

5.3.3 When joining spools or components, they shall not be strained nor deformed other than as may be required by the design. Designer's installation instructions, if any, shall be observed.

NOTE 5.3.3 is deemed to be fulfilled, when the quality characteristics of the material are not impaired by cold or hot forming, e.g. by cutting, grinding, straightening or bending, of the components and when the different components have been joined such that stresses and deformations which can impair the safety of the piping are excluded.

5.3.4 Any temporary supports or restraints used as an aid during transport, installation or testing shall be removed prior to commissioning.

5.3.5 Appropriate measures shall be taken to avoid corrosion-inducing contamination of stainless steel and non-ferrous materials. If contamination occurs, it shall be properly removed as soon as practicable, notwithstanding any final treatment.

AVA Documents
Document Sharing Hub

Full document details: BS EN 13480-4:2024

NOTE Recommended methods for the prevention and removal of contamination on stainless steel are given in Annex A.

5.3.6 Piping for fluids which are likely to cause condensation shall be installed with adequate slopes and traps.

5.4 Classification of piping

The piping systems shall be classified into different categories depending on the fluid carried, diameter and pressure. These are given in EN 13480-1:2024.

5.5 Material grouping

Material grouping is given in EN 13480-2:2024.

5.6 Tolerances

Tolerances shall comply with EN ISO 13920:1996, class C and class G, except where other classes are specified in this European Standard or by design.

Angular tolerances for fabricated pipework shall be determined by the dimensional tolerance for the terminal points of the finished part.

Alternative tolerances for fabrication and installation of pipework shall be determined and in all cases these shall be identified in the specification. Dimensional tolerances for fabricated spools shall comply with Annex B.

6 Cutting and bevelling

6.1 General

Cutting and bevelling by machining shall be permitted for all materials.

Flame cutting shall be permitted for material groups 1, 2, 3, 4 and 5 only with preheating as specified for welding.

NOTE Flame cutting for material groups 1 and 2 can be used for bevelling, if the required bevel forms and tolerances can be achieved and the heat affected zone has no detrimental effects on the quality of the weld.

For material groups 3, 4 and 5, the heat affected zone shall be removed by machining or grinding.

Plasma cutting shall be permitted for all material groups given in this European Standard. Plasma cutting shall be preceded by preheating, as specified for welding.

Other cutting and bevelling processes are permitted, provided their suitability is demonstrated.

6.2 Identification of pressure parts

For pressure parts, identification of materials shall remain possible, either by retaining or by transferring the mark stipulated by the product standard, or by using a unique code kept in the records of the piping fabricator.

Stamping shall not introduce a notching effect, therefore low-stress stamping is recommended.

If any method of marking other than hard-stamping, edging or engraving (vibrograph) is used, the fabricator shall ensure that confusion between different materials is not possible.

Documents
Document Sharing Hub
Full document details: BS EN 13480-4:2024

7 Bending and other forming

7.1 General

7.1.1 Fabricators of formed pressure parts shall have adequate procedures, equipment and tools for the forming and the subsequent heat treatment.

The procedure for bending shall be qualified according to EN 12952-5:2021, Annex A, with regard to examination and range of qualification.

Pipes with internal coating such as glass, rubber or plastics shall not be formed unless it has been demonstrated that the forming process is not detrimental to the lining.

NOTE There are two kinds of forming within the scope of this European Standard: cold forming and hot forming.

The thickness after bending or forming shall be not less than that required by the design.

Longitudinal welds should be located at the neutral zone. The range of the neutral zone after bending is given in Figure 7.1.1-1.

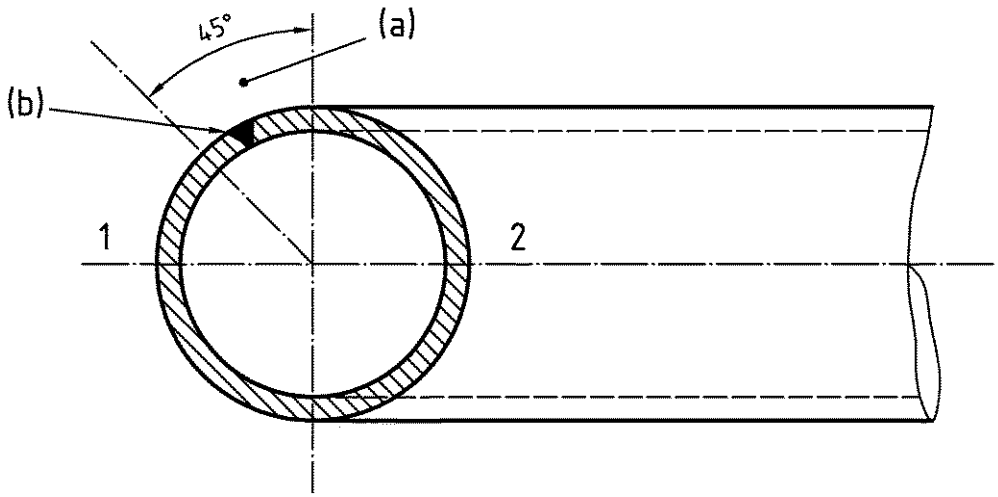

Key
1 extrados
2 intrados
(a) optimal range for the longitudinal weld at bending
(b) weld

Figure 7.1.1-1 — Optimal range for the longitudinal weld at bending

7.1.2 The forming and post-forming heat treatment of thermomechanical steels shall be given individual consideration. Account shall be taken of the recommendations of the steelmakers.

Pipes whose properties have been generated by thermomechanical means such as controlled rolling can be formed by cold methods. Such materials may be substantially changed by the forming process and require particular consideration to ensure that the specified properties are recovered after forming.

7.1.3 The following formulae shall be used for the calculation of the percentage deformation for cold formed cylinders and cone products made by rolling (see Figure 7.1.3-1):

a) For cylinders and cones rolled from flat materials (see Figures 7.1.3-1a) and 7.1.3-1c)):

Documents
Document Sharing Hub

Full document details: BS EN 13480-4:2024

$$V_d = \frac{50\, e_{ord}}{r_{mf}} \qquad (7.1.3\text{-}1)$$

b) For cylinders and cones rolled from intermediate product (see Figures 7.1.3-1b) and 7.1.3-1c)):

$$V_d = \frac{50\, e_{int}}{r_{mf}} \left(1 - \frac{r_{mf}}{r_{mi}}\right) \qquad (7.1.3\text{-}2)$$

where

e_{ord} is the ordered thickness;

e_{int} is the thickness of the intermediate product;

r_{mf} is the average radius of the finished product;

r_{mi} is the average radius of the intermediate product;

V_d is the deformation as a percentage.

NOTE If no intermediate quality heat treatment is applied between individual forming steps, the deformation is the total amount of deformation of the individual steps. If intermediate quality heat treatment is applied between the forming steps, the deformation is that deformation applied after the last treatment.

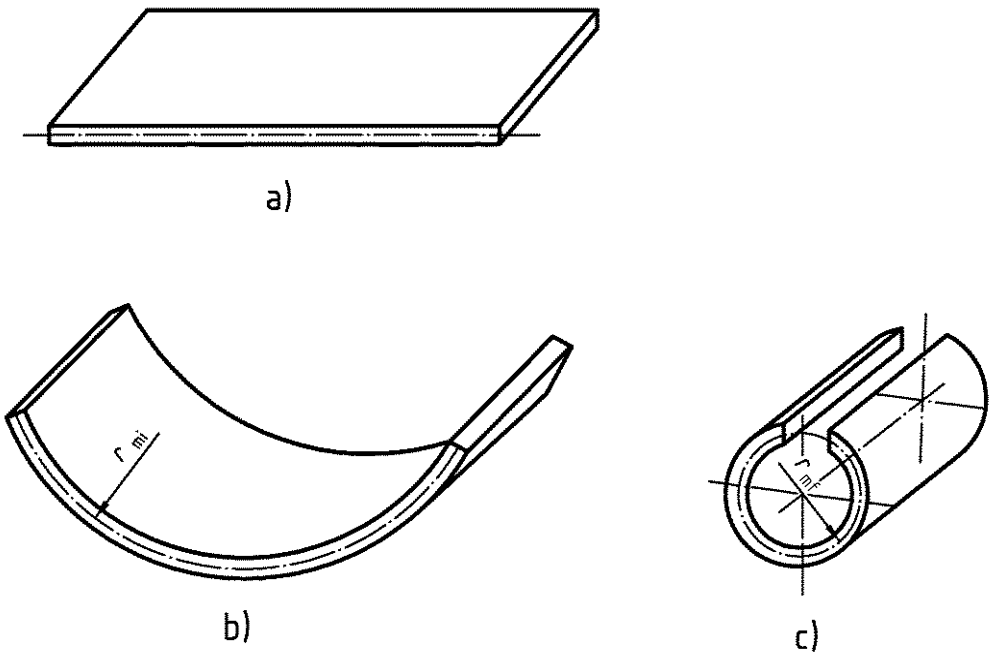

a) Initial product b) Intermediate product c) Finished product

Figure 7.1.3-1 — Forming of cylinders and cones

7.1.4 Tools and equipment used for forming shall be maintained to ensure a smooth profile free from stress-raising defects, e.g. scores.

7.1.5 Heat treatment after forming shall be in accordance with the respective material standard.

7.1.6 Welding on to formed areas shall not be performed until heat treatment is complete.

Documents
Document Sharing Hub
Full document details: BS EN 13480-4:2024

7.2 Heat treatment after cold forming

7.2.1 Flat products

Flat products shall be heat treated after cold forming as required in Table 7.2.1-1.

For special design reasons, for example cyclic loading or stress corrosion cracking, heat treatment in excess of that in Table 7.2.1-1 may be specified after cold forming.

No heat treatment for austenitic steels is required:

a) For austenitic steels having a documented minimum value of elongation after fracture (rupture) A_5 equal to or greater than 30 %, a maximum level of 15 % cold deformation shall be acceptable.

   A greater deformation may be accepted if the evidence is supplied that there is a minimum elongation after fracture (rupture) of 15 % after cold forming.

   Such evidence shall be deemed supplied, if the acceptance certificate shows that elongation after fracture (rupture) A_5 is not less than 30 %. This shall be applicable only in cases where there is no risk of stress corrosion cracking;

b) For austenitic steels having a required minimum value of elongation after fracture (rupture) A_5 less than 30 %, evidence shall be supplied that there is a minimum elongation of 15 % after cold forming;

c) Deformation shall not exceed 10 % if the working temperature is below -196 °C.

Table 7.2.1-1 — Heat treatment after cold forming of flat products

Material groups according to CEN ISO/TR 15608:2017	Deformation	Heat treatment
1.1, 1.2, 1.3, 2.1, 2.2 [a], 3, 4 [b], 5.1, 5.2[b], 5.3 [b], 5.4 [b], 6 [b], 7.1, 7.2, 7.3, 9.1, 9.2, 10	≤ 5 %	no
	> 5 %	yes
8.1, 8.2	c	d

a If not heat treated, qualification tests are required to demonstrate that the material properties are not impaired.

b Heat treatment required in accordance with the material standards where the minimum metal temperature is below - 10 °C.

c See 7.2.1 a), b) and c).

d Solution annealed and quenched or stabilised materials do not require heat treatment after cold forming.

7.2.2 Pipes

Pipes shall be heat treated after cold forming in accordance with Table 7.2.2-1.

For special reasons, for example cyclic loading or stress corrosion, heat treatment may be specified after cold forming.

AVA Documents
Document Sharing Hub

Full document details: BS EN 13480-4:2024