BRITISH STANDARD

BS EN 13567:2002 +A1:2007

Protective clothing — Hand, arm, chest, abdomen, leg, genital and face protectors for fencers — Requirements and test methods

ICS 13.340.01

NO COPYING WITHOUT BSI PERMISSION EXCEPT AS PERMITTED BY COPYRIGHT LAW

BSI Documents Document Sharing Hub British Standards

Full document details: BS EN 13567:2002+A1:2007

National foreword

This British Standard is the UK implementation of EN 13567:2002+A1:2007. It supersedes BS EN 13567:2002, which is withdrawn.

The start and finish of text introduced or altered by amendment is indicated in the text by tags. Tags indicating changes to CEN text carry the number of the CEN amendment. For example, text altered by CEN amendment A1 is indicated by ▶A1⟩ ⟨A1◀.

The UK participation in its preparation was entrusted by Technical Committee PH/3, Protective clothing, to Subcommittee PH/3/11, Protective equipment for sports players.

A list of organizations represented on this subcommittee can be obtained on request to its secretary.

This publication does not purport to include all the necessary provisions of a contract. Users are responsible for its correct application.

Compliance with a British Standard cannot confer immunity from legal obligations.

This British Standard was published under the authority of the Standards Policy and Strategy Committee on 5 August 2002

© BSI 2008

ISBN 978 0 580 61983 0

Amendments/corrigenda issued since publication

Date	Comments
30 May 2008	Implementation of CEN amendment A1:2007

Documents
Document Sharing Hub

Full document details: BS EN 13567:2002+A1:2007

EUROPEAN STANDARD

NORME EUROPÉENNE

EUROPÄISCHE NORM

EN 13567:2002+A1

June 2007

ICS 13.340.10

Supersedes EN 13567:2002

English Version

Protective clothing - Hand, arm, chest, abdomen, leg, genital and face protectors for fencers - Requirements and test methods

Vêtements de protection - Protection des mains, des bras, de la piotrine, de l'abdomen, des jambes, génitales et de la face pour les escrimeurs - Exigences et méthodes d'essai

Schutzkleidung - Hand-, Arm-, Brustkorb-, Unterleibs-, Bein-, Genital- und Gesichtsschützer für Fechter - Anforderungen und Prüfverfahren

This European Standard was approved by CEN on 25 March 2002 and includes Amendment 1 approved by CEN on 10 May 2007.

CEN members are bound to comply with the CEN/CENELEC Internal Regulations which stipulate the conditions for giving this European Standard the status of a national standard without any alteration. Up-to-date lists and bibliographical references concerning such national standards may be obtained on application to the CEN Management Centre or to any CEN member.

This European Standard exists in three official versions (English, French, German). A version in any other language made by translation under the responsibility of a CEN member into its own language and notified to the CEN Management Centre has the same status as the official versions.

CEN members are the national standards bodies of Austria, Belgium, Bulgaria, Cyprus, Czech Republic, Denmark, Estonia, Finland, France, Germany, Greece, Hungary, Iceland, Ireland, Italy, Latvia, Lithuania, Luxembourg, Malta, Netherlands, Norway, Poland, Portugal, Romania, Slovakia, Slovenia, Spain, Sweden, Switzerland and United Kingdom.

EUROPEAN COMMITTEE FOR STANDARDIZATION
COMITÉ EUROPÉEN DE NORMALISATION
EUROPÄISCHES KOMITEE FÜR NORMUNG

Management Centre: rue de Stassart, 36 B-1050 Brussels

© 2007 CEN All rights of exploitation in any form and by any means reserved worldwide for CEN national Members.

Ref. No. EN 13567:2002+A1:2007: E

Documents
Document Sharing Hub

Full document details: BS EN 13567:2002+A1:2007

Contents

page

Foreword 3

Introduction 4

1 Scope 4

2 Normative references 4

3 Terms and definitions 5

4 Requirements 9
4.1 General 9
4.2 Innocuousness 9
4.3 Ergonomic requirements 9
4.4 Restraint requirements 9
4.5 Sizing 9
4.6 Minimum dimensions of zones of protection 10
4.7 Construction materials and construction details 18
4.8 Penetration resistance 20
4.9 Burst strength of seams 22

5 Test methods 22
5.1 Instruments 22
5.2 Products for testing 22
5.3 Conditioning of products 23
5.4 Innocuousness 23
5.5 Ergonomic testing 23
5.6 Sizing 24
5.7 Examination of zones of protection 24
5.8 Restraint testing of masks 24
5.9 Bib attachment testing 25
5.10 Penetration testing 26
5.11 Burst testing 35

6 Marking 36

7 Information to be supplied by the manufacturer 36

Annex A (informative) Information about determining the chemical innocuousness of protective clothing and equipment 38
A.1 General 38
A.2 Evidence of innocuousness 38
A.3 Possible specific innocuousness testing 38

Annex B (informative) Levels of protection 40
B.1 Performance levels 40
B.2 Performance of combinations 40
B.3 Fencing jackets, breeches and underpants 40
B.4 Masks - bibs 41

Annex C (informative) Visors and masks made of material other than steel wire mesh 42

Annex ZA (informative) Clauses of this European Standard addressing essential requirements or other provisions of EU Directives 43

Bibliography 44

Documents
Document Sharing Hub

Full document details: BS EN 13567:2002+A1:2007

Foreword

This document (EN 13567:2002+A1:2007) has been prepared by Technical Committee CEN/TC 162 "Protective clothing including hand and arm protection and lifejackets", the secretariat of which is held by DIN.

This document shall be given the status of a national standard, either by publication of an identical text or by endorsement, at the latest by December 2007 and conflicting national standards shall be withdrawn at the latest by December 2007.

This document includes Amendment 1, approved by CEN on 2007-05-10.

This document supersedes EN 13567:2002.

The start and finish of text introduced or altered by amendment is indicated in the text by tags A1 A1.

This document has been prepared under a mandate given to CEN by the European Commission and the European Free Trade Association, and supports essential requirements of EU Directive(s).

For relationship with EU Directive(s), see informative Annex ZA, which is an integral part of this document.

According to the CEN/CENELEC Internal Regulations, the national standards organizations of the following countries are bound to implement this European Standard: Austria, Belgium, Bulgaria, Cyprus, Czech Republic, Denmark, Estonia, Finland, France, Germany, Greece, Hungary, Iceland, Ireland, Italy, Latvia, Lithuania, Luxembourg, Malta, Netherlands, Norway, Poland, Portugal, Romania, Slovakia, Slovenia, Spain, Sweden, Switzerland and United Kingdom.

Documents
Document Sharing Hub

Full document details: BS EN 13567:2002+A1:2007

Introduction

Fencing by virtue of being a combat sport in which body contact by the weapon occasionally (but usually inadvertently) occurs outside the zones of protection, is by its nature dangerous. Protective clothing and equipment for fencers is intended as far as possible to prevent injuries, or in the worst cases to reduce the severity of injuries, particularly by the point of the weapon.

Broken blades pose a particular threat. The circumstances of the breakage of blades may result in high tip velocities and consequent high energy impacts by the broken blade. Broken blades have been known to penetrate protective equipment with fatal consequences. No practical clothing is capable of withstanding all broken blade impacts.

In this standard the concept of the 'optimum level of protection' has been taken into account. This concept is that the level of protection specified should be as high as it can be, without causing such unacceptable discomfort or impediment to fencing movements that fencers would not use the protective clothing.

The clothing specified in this standard provides two levels of protection perceived by the organisers and participants in the sport to be appropriate. Its use is expected to reduce risks of injuries to fencers to a tolerable level.

1 Scope

This European Standard specifies the general requirements for ergonomics, sizing, coverage and performance of protective clothing and equipment for use in the sport of fencing. Requirements for the marking of clothing and equipment and the information to be supplied by the manufacturer are given. Test methods are described and performance levels are defined.

2 Normative references

This European Standard incorporates by dated or undated reference, provisions from other publications. These normative references are cited at the appropriate places in the text, and the publications are listed hereafter. For dated references, subsequent amendments to or revisions of any of these publications apply to this European Standard only when incorporated in it by amendment or revision. For undated references the latest edition of the publication referred to applies (including amendments).

EN 166:2001, *Personal eye-protection — Specifications.*

EN 388, *Protective gloves against mechanical risks.*

EN 420, *General requirements for gloves.*

EN 1082-1:1996, *Protective clothing — Gloves and arm guards protecting against cuts and stabs by hand knives — Part 1: Chain mail gloves and arm guards.*

EN ISO 5084:1996, *Textiles — Determination of thickness of textiles and textile products (ISO 5084:1996).*

EN 13546:2002, *Protective clothing — Hand, arm, chest, abdomen, leg, foot and genital protectors for field hockey goal keepers, and shin protectors for field players — Requirements and test methods.*

EN 13595-3:2002, *Protective clothing for professional motorcycle riders — Jackets, trousers and one-piece or divided suits — Part 3: Test method for determination of burst strength.*

EN ISO 13938-1:1999, *Textiles — Bursting properties of fabrics — Part 1: Hydraulic method for determination of bursting strength and bursting distension (ISO 13938-1:1999).*

Documents
Document Sharing Hub

Full document details: BS EN 13567:2002+A1:2007

EN ISO 13938-2:1999, *Textiles — Bursting properties of fabrics — Part 2: Pneumatic method for determination of bursting strength and bursting distension (ISO 13938-2:1999).*

A1 *deleted text* A1

ISO 3758, *Care labelling code using symbols.*

ISO 6330:2000, *Textiles — Domestic washing and drying procedures for textile testing.*

ISO 7500-1:1999, *Metallic materials — Verification of static uniaxial testing machines — Part 1: Torsion/compression testing machines – Verification and calibration of the force-measuring system.*

ISO 8559:1989, *Garment construction and anthropometric surveys — Body dimensions.*

3 Terms and definitions

For the purposes of this European Standard, the following terms and definitions apply.

3.1
protective clothing and equipment
clothing and specific devices worn on the body, arms, hands and legs and over the face and neck, that are intended to reduce the severity of injuries from fencing weapons

3.2
zone of protection
area of protective equipment that is intended to provide protection, and is subject to specific testing

3.3
coverage
area of the fencer's body covered by the whole item of protective clothing or equipment and its attachments

3.4
garment
unit of clothing which itself has an integral zone of protection replacing or in addition to an article of non-protective clothing

3.5
handedness
designs and the markings on equipment that relate to its intended use by fencers holding their weapons in the right hands or left hands or whether the equipment is for ambidextrous use by right or left handed fencers

3.6
performance level
number designating the level of the protection that it is intended the product should provide. This number is used in designating the test severity to which the product is to be subjected. For non-normative guidance on performance levels and the choice of equipment see annex B

3.7
fencing
International and Olympic sport based on European duelling with swords and embracing disciplines characterised by the relevant weapons

3.8
weapon
collective term covering the following specific swords used in fencing

Documents
Document Sharing Hub

Full document details: BS EN 13567:2002+A1:2007

3.8.1
foil
rectangular section blade conventional duelling weapon with which hits are scored with the point only. The target is the anterior of the torso including the abdomen and the posterior torso down to the waist. The head, arms and legs are excluded, but are often hit

3.8.2
epee
traditional duelling weapon of V section blade with which hits are scored only with the point, and for which the target is the whole body, including the head and feet

3.8.3
sabre
weapon derived from the Cavalry sabre with a blunt cutting edge. Hits are scored with any part of the blade. The target is the whole body above the waist with the exception of the hands

3.9
point
expanded and/or flattened end of the blade of a weapon so designed as to reduce the possibility of the perforation of the protective clothing

3.10
fencing mask
protective device covering the face and sides of the head and the front of the neck. The parts are illustrated in

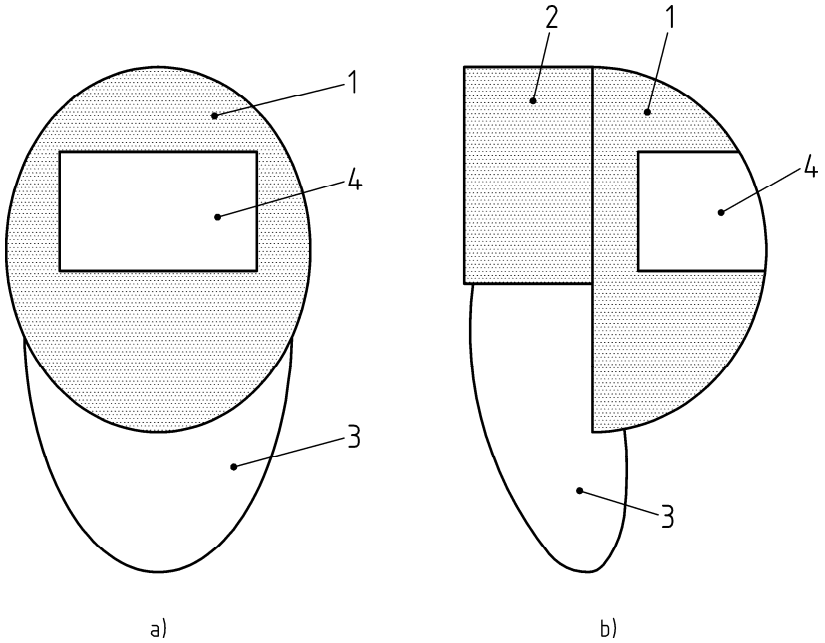

Key

A1
a) Front view
b) Side view
A1
1 Hard shell
2 Lateral protection
3 Bib
4 Visor (optional)

Figure 1 — Component parts of a fencing mask

Documents
Document Sharing Hub
Full document details: BS EN 13567:2002+A1:2007

3.10.1
hard shell
framework, part of which is see-through covering the face of the head

3.10.2
lateral protection
framework, part of which can be see-through covering the sides of the head and meeting over the top of the head

3.10.3
mask bib
protective element covering the front of the neck

3.10.4
visor
optional transparent area of the mask replacing part or all of the hard shell

3.10.5
join
any junction between the hard shell and visor, or hard shell or visor and the lateral protection

3.10.6
see-through area
region of the hard shell through which a fencer is able to see their opponent

3.11
fencing clothing
clothing designed specifically for the sport of fencing

3.11.1
fencing jacket
garment covering the full length of both arms from the wrist to the shoulder, the chest and at least the upper part of the abdomen

3.11.2
fencing breeches (trousers)
garment covering the abdomen, thighs and knees (and occasionally the lower leg)

3.11.3
fencing underpants
protective garment covering the abdomen and upper half of the thigh. If used, this garment is worn inside the trousers

3.11.4
(fencing) under plastron
one armed garment worn under a jacket covering at least part of the weapon arm, the axilla (armpit) of the weapon arm and part of the chest wall on the same side

NOTE There are two-armed under plastrons which cover both of the fencer's arms. These are generally used by sabre fencers to reduce bruising.

3.11.5
fencing gloves
clothing covering the hand, wrist and part of the forearm of the fencer

3.11.6
long fencing socks
garments covering the feet and the lower part of the leg to just above the knee

Documents
Document Sharing Hub

Full document details: BS EN 13567:2002+A1:2007

3.12
fencing breast protector
device worn over the breasts by lady fencers. The devices may be in one part or may consist of two, or may be elements for fitting into the inside of the front of the jacket or into the brassiere, or other garment

3.13
genital protector
device worn inside the trousers to protect the genitalia

3.14
body dimensions
3.14.1
stature (height)
vertical distance between the crown of the head and the ground measured with the subject standing upright without shoes and with their feet together

3.14.2
chest girth
maximum horizontal girth measured during normal breathing with the subject standing upright and the tape measure passed over the scapulae under the arm pits and across the chest

3.14.3
bust girth
maximum horizontal girth measured during normal breathing with the subject standing upright and the tape-measure passed over the scapulae under the armpits and across the breasts: normal underclothing to be worn

3.14.4
under bust girth
horizontal girth of the body immediately below the breasts measured as for the bust girth

3.14.5
waist girth
maximum horizontal girth measured during normal breathing with the subject standing upright and the tape-measure passed around the body in the plane of the waist, 50 mm above the supra-cristal plane which is at the level of the highest points of the iliac crests. The dimension 50 mm refers to a subject of 1 780 mm tall and should be scaled pro-rata with the height of the actual subject

3.14.6
outside leg length
distance from the waist to the ground, measured with the tape-measure following the contour of the hip

A1 3.14.7
vertical circumference of the head
circumference of the head measured with the measuring tape from the crown of the head, past the front of the ears and the rear of the jaw bone to meet underneath the jaw at the point where it joins the throat

NOTE See Figure 2.

Figure 2 — Illustration of the circumference of the head A1

Documents
Document Sharing Hub
Full document details: BS EN 13567:2002+A1:2007

4 Requirements

4.1 General

Protective clothing and equipment for fencers shall meet a general requirement that the product is safe to use and fit for its purpose and shall also meet the following specific requirements.

4.2 Innocuousness

Protective clothing and equipment for fencers shall be designed and manufactured to provide protection when used according to the manufacturer's instructions, without endangering the user or other players. There shall not be hard or sharp edges, seams, buckles or other items on the surfaces of the products that could harm the user or other players during normal use. Examination shall be made according to 5.4.

Construction materials and incorporated substances shall not harm those coming into contact with them. The manufacturer shall list in the information supplied with the product, the substances used in the main components of the product, and shall label any product containing substances or preparations generally known to be hazardous. Information about determining the chemical innocuousness of protective clothing and equipment is given in informative annex A.

4.3 Ergonomic requirements

Fencers' protective equipment shall be designed to minimise discomfort and impediment while wearing it. Fabrics in contact with the skin shall be wettable and not impermeable. The designs should permit normal fencing movements. The mask and visor shall not unduly distort the view of the user. The bib shall not cause the mask to be displaced when the user flexes their neck. The equipment shall be assessed according to 5.5.

4.4 Restraint requirements

Fencers' protective equipment shall be designed so that it should remain in place during normal use and during impacts. This restraint may be achieved using integral straps with buckles, touch and close fasteners, separate 'harness' or other items of protective equipment or clothing. The manufacturer shall give details of how adequate restraint of the equipment may be achieved in the information supplied by the manufacturer, see clause 7.

Fencers' masks shall not be pulled off a test subject's head when a force of 20 N is applied as described in 5.8, nor brought into contact with a test subject's face when tested with a force of 50 N as described in 5.8.

4.5 Sizing

Protective equipment shall be marked with its size (see clause 6). The size shall be related to the body dimensions of the fencers the equipment should fit, and this shall be explained in the information supplied by the manufacturer (see clause 7). The following body dimensions shall be used in sizing the protective equipment. Other dimensions may be used in addition. Definitions of some body dimensions are given in [A1⟩ 3.14 ⟨A1]; others shall be determined by reference to ISO 8559:1989.

Jackets and under plastrons shall be sized against the users' chest or bust girth and stature.

Breeches and fencing underpants shall be sized against the users' waist girth and stature or outside leg measurement.

Gloves shall be sized against the users' hand length and hand breadth as described in EN 1082-1:1996, annex B, Table B1.

Socks shall be sized against the users' shoe size.

Breast protectors shall be sized according to brassiere and brassiere cup sizes as defined in ISO 8559, or against the user's bust girth or under bust girth.

Documents
Document Sharing Hub

Full document details: BS EN 13567:2002+A1:2007

Fencing masks shall be sized according to their circumference as specified in Table 1 and measured according to 5.7.

Genital protectors shall be sized as specified in EN 13546:2002 for hard genital protectors.

4.6 Minimum dimensions of zones of protection

4.6.1 General

All protective equipment shall have a zone or zones, of protection, the dimensions of which shall be related to the size of the user. The dimensions and position of the zones of protection relative to the coverage provided by the whole equipment shall be given in the information supplied by the manufacturer (see clause 7). Where the dimensions of the coverage exceed those of the zone of protection by more than 15 mm in any direction, the outline of the zone of protection shall be clearly displayed. This may be by a line or a colour boundary on the inside or the outside of the equipment, or by a pictogram permanently attached to the equipment. It shall be possible to display the extent of the zone of protection where the garment is offered for sale.

Documents
Document Sharing Hub

Full document details: BS EN 13567:2002+A1:2007

The dimensions of the zones of protection of clothing and equipment shall be measured as described in 5.7.

4.6.2 Masks

Fencing masks shall have dimensions as shown in Table 1, and illustrated in Figure [A1⟩ 3 ⟨A1]. If a transparent visor is fitted there shall be a height of at least 40 mm of transparent material above the horizontal plane through the hard shell at the level of the mid point of dimension *B*, and at least 30mm of transparent material below this plane.

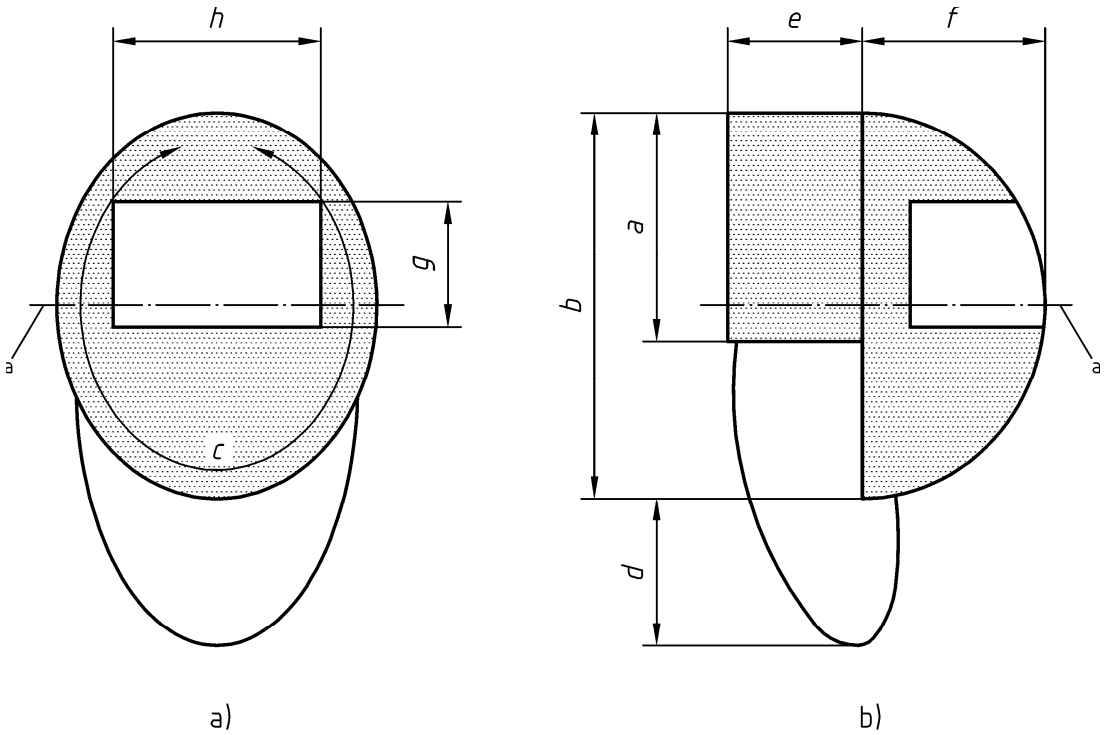

Key

[A1⟩

a) Front view

b) Side view

⟨A1]

a/*b* The ratio of the vertical height of the lateral protection to the vertical height of the hard shell

a Horizontal plane at the level of the mid point of dimension B

c The internal circumference of the hard shell measured on the inner surface of the padding

d The depth of the bib

e The width of the lateral protection

f The front to back internal depth of the hard shell

g The minimum vertical height of the transparent area of a visor if present

h The minimum horizontal width of the transparent area of a visor if present

[A1⟩ *deleted text* ⟨A1]

Figure [A1⟩ 3 ⟨A1] — Fencing mask - Dimensions of component parts

AVA Documents
Document Sharing Hub

Full document details: BS EN 13567:2002+A1:2007

Table 1 — Fencing mask – Dimensions of component parts

[A1]

Vertical circumference of the head i[a]	a/b	c	d	e	f	g	h
mm		mm	mm	mm	mm	mm	mm
$i = i_{min}$ to i_{max}	> $^2/_3$	$i_{max} < c < (i_{max} + 40)$	> 100	> 100	> 70	> 70	> 130
i_{min} = minimum dimension of the vertical circumference of the head of the user i_{max} = maximum dimension of the vertical circumference of the head of the user The difference between i_{max} and i_{min} shall be ≤ 80 mm.							
[a] Also dimension for the nominal size.							

[A1]

4.6.3 Fencing clothing

4.6.3.1 General

The specific zone of protection as well as the coverage provided by protective clothing for the trunk is determined by the particular discipline involved. It is also determined by whether the wearer is left or right handed. In all cases it is a requirement that each item of protective clothing shall be plainly marked with the particular fencing disciplines for which the clothing is suitable, as well as the ”handedness” for which it is intended (see clause **6**). When the correct size of garment is worn the user should have certain areas of the body covered by protective material when making all normal fencing movements (see **annex B**):

4.6.3.2 Coverage by fencing jackets, breeches and underpants

Jackets – From 30 mm above the neck line down to within 50 mm of the wrist, to the waist all round the torso, and in jackets for epee over the anterior surface of the abdomen (dimension *D*, Figure [A1] 4a [A1]).

Breeches – From at least 100 mm above the waist to at least 75 mm below the plane of the knee joint, all round the abdomen and thighs.

Underpants – The anterior 50 % of the circumference of the abdomen and thighs from the waist to at least halfway down the thighs.

4.6.3.3 Dimensions of the zones of protection of fencing jackets, breeches and underpants

The dimensions of the zones of protection shall be determined by the values given in the information supplied by the manufacturer for the relevant control dimensions of the largest user the garment is intended to fit. The dimensions of the zones of protection shall not be less than those defined by Table 2 and illustrated in Figure [A1] 4 [A1].

Documents
Document Sharing Hub

Full document details: BS EN 13567:2002+A1:2007

Table 2 — The minimum dimensions of the zones of protection of jackets, breeches and underpants

Dimensions of the zones of protection as percentages of the control dimensions, or as a minimum value in millimetres											
		Jacket					Breeches			Under pants	
		a %	*b* %	*c* mm	*d* %	*e* %	*f* %	*g* mm	*h* %	*i* %	*j* %
Control dimension	Height	-	29	-	9	29	-	-	36	-	20
	Chest girth	51	-	-	-	-	-	-	-	-	-
	Waist girth	-	-	-	-	-	51	-	-	51	-
minimum value		-	-	30	-	-	-	100	-	-	-
For with " - " characterized fields are not determined control dimensions or minimum values											

AVA Documents
Document Sharing Hub

Full document details: BS EN 13567:2002+A1:2007