BS EN 13823:2020+A1:2022

BSI Standards Publication

Reaction to fire tests for building products — Building products excluding floorings exposed to the thermal attack by a single burning item

Documents
Document Sharing Hub

Full document details: BS EN 13823:2020+A1:2022

National foreword

This British Standard is the UK implementation of EN 13823:2020+A1:2022. It supersedes EN 13823:2020, which is withdrawn.

The start and finish of text introduced or altered by amendment is indicated in the text by tags. Tags indicating changes to CEN text carry the number of the CEN amendment. For example, text altered by CEN amendment A1 is indicated by ▌A1⟩ ⟨A1▌.

The UK participation in its preparation was entrusted to Technical Committee FSH/21, Reaction to fire tests.

A list of organizations represented on this committee can be obtained on request to its committee manager.

Contractual and legal considerations

This publication has been prepared in good faith, however no representation, warranty, assurance or undertaking (express or implied) is or will be made, and no responsibility or liability is or will be accepted by BSI in relation to the adequacy, accuracy, completeness or reasonableness of this publication. All and any such responsibility and liability is expressly disclaimed to the full extent permitted by the law.

This publication is provided as is, and is to be used at the recipient's own risk.

The recipient is advised to consider seeking professional guidance with respect to its use of this publication.

This publication is not intended to constitute a contract. Users are responsible for its correct application.

© The British Standards Institution 2023
Published by BSI Standards Limited 2023

ISBN 978 0 539 25540 9

ICS 13.220.50; 91.060.01; 91.100.01

Compliance with a British Standard cannot confer immunity from legal obligations.

This British Standard was published under the authority of the Standards Policy and Strategy Committee on 31 May 2020.

Amendments/corrigenda issued since publication

Date	Text affected
31 January 2023	Implementation of CEN amendment A1:2022

AVA Documents
Document Sharing Hub

Full document details: BS EN 13823:2020+A1:2022

EUROPEAN STANDARD

NORME EUROPÉENNE

EUROPÄISCHE NORM

EN 13823:2020+A1

July 2022

ICS 13.220.50; 91.060.01; 91.100.01

Supersedes EN 13823:2020

English Version

Reaction to fire tests for building products - Building products excluding floorings exposed to the thermal attack by a single burning item

Essais de réaction au feu des produits de construction - Produits de construction à l'exclusion des revêtements de sol exposés à une sollicitation thermique provoquée par un objet isolé en feu

Prüfungen zum Brandverhalten von Bauprodukten - Thermische Beanspruchung durch einen einzelnen brennenden Gegenstand für Bauprodukte mit Ausnahme von Bodenbelägen

This European Standard was approved by CEN on 17 February 2020 and includes Amendment 1 approved by CEN on 8 May 2022.

CEN members are bound to comply with the CEN/CENELEC Internal Regulations which stipulate the conditions for giving this European Standard the status of a national standard without any alteration. Up-to-date lists and bibliographical references concerning such national standards may be obtained on application to the CEN-CENELEC Management Centre or to any CEN member.

This European Standard exists in three official versions (English, French, German). A version in any other language made by translation under the responsibility of a CEN member into its own language and notified to the CEN-CENELEC Management Centre has the same status as the official versions.

CEN members are the national standards bodies of Austria, Belgium, Bulgaria, Croatia, Cyprus, Czech Republic, Denmark, Estonia, Finland, France, Germany, Greece, Hungary, Iceland, Ireland, Italy, Latvia, Lithuania, Luxembourg, Malta, Netherlands, Norway, Poland, Portugal, Republic of North Macedonia, Romania, Serbia, Slovakia, Slovenia, Spain, Sweden, Switzerland, Türkiye and United Kingdom.

EUROPEAN COMMITTEE FOR STANDARDIZATION
COMITÉ EUROPÉEN DE NORMALISATION
EUROPÄISCHES KOMITEE FÜR NORMUNG

CEN-CENELEC Management Centre: Rue de la Science 23, B-1040 Brussels

© 2022 CEN All rights of exploitation in any form and by any means reserved worldwide for CEN national Members.

Ref. No. EN 13823:2020+A1:2022 E

Documents
Document Sharing Hub

Full document details: BS EN 13823:2020+A1:2022

Contents

Page

European foreword 4
Introduction 5
1 Scope 6
2 Normative references 6
3 Terms and definitions 6
4 Test facility 8
4.1 General 8
4.2 Test room 8
4.3 Materials 9
4.4 Test apparatus 10
4.5 Smoke exhaust system 12
4.6 General measurement section equipment 12
4.7 Other general equipment 13
5 Test specimen 14
5.1 Dimensions of specimen 14
5.2 Mounting of specimen 15
5.3 Installation of the specimen wings in the trolley 17
5.4 Number of specimens 18
6 Conditioning 18
7 Principle 18
8 Test procedure 19
8.1 General 19
8.2 Testing operations 19
8.3 Visual observation and manual recording of data 20
8.4 Automated recording of data 22
8.5 Early termination of test 23
9 Expression of results 23
10 Test report 24
Annex A (normative) Calculation procedures 25
A.1 General 25
A.2 Synchronization of data 26
A.3 Checking equipment response 28
A.4 Exposure period 29
A.5 Heat output 29
A.6 Smoke production 34
A.7 Calculations for calibrations – Propane heat release 39
Annex B (informative) Precision of test method 40
B.1 General remarks and results 40
B.2 Calculation of test results 41

Documents
Document Sharing Hub
Full document details: BS EN 13823:2020+A1:2022

B.3 Statistical analysis 41
B.4 Statistical results 42
Annex C (normative) Calibration procedures 47
C.1 Procedures for separate pieces of equipment 47
C.2 System response calibrations 49
Annex D (informative) Calibration procedures 59
D.1 Procedures for separate pieces of equipment 59
D.2 Check of the thermal attack on the specimens 61
Annex E (normative) Design drawings 62
Annex F (informative) Data file format 97
Annex G (informative) Record sheet 100
Bibliography 101

Documents
Document Sharing Hub

Full document details: BS EN 13823:2020+A1:2022

European foreword

This document (EN 13823:2020+A1:2022) has been prepared by Technical Committee CEN/TC 127 “Fire safety in buildings”, the secretariat of which is held by BSI.

This European Standard shall be given the status of a national standard, either by publication of an identical text or by endorsement, at the latest by January 2023, and conflicting national standards shall be withdrawn at the latest by January 2023.

Attention is drawn to the possibility that some of the elements of this document may be the subject of patent rights. CEN shall not be held responsible for identifying any or all such patent rights.

This document includes Amendment 1 approved by CEN on 8 May 2022.

This document supersedes [A1⟩ EN 13823:2020 ⟨A1].

The start and finish of text introduced or altered by amendment is indicated in the text by tags [A1⟩ ⟨A1].

This document has been prepared under a Standardization Request given to CEN by the European Commission and the European Free Trade Association.

Any feedback and questions on this document should be directed to the users’ national standards body. A complete listing of these bodies can be found on the CEN website.

According to the CEN-CENELEC Internal Regulations, the national standards organizations of the following countries are bound to implement this European Standard: Austria, Belgium, Bulgaria, Croatia, Cyprus, Czech Republic, Denmark, Estonia, Finland, France, Germany, Greece, Hungary, Iceland, Ireland, Italy, Latvia, Lithuania, Luxembourg, Malta, Netherlands, Norway, Poland, Portugal, Republic of North Macedonia, Romania, Serbia, Slovakia, Slovenia, Spain, Sweden, Switzerland, Türkiye and the United Kingdom.

Documents
Document Sharing Hub

Full document details: BS EN 13823:2020+A1:2022

Introduction

The classification of the reaction to fire performance of construction products established by Delegated Regulation (EU) 2016/364 defines the reaction to fire classes for building products excluding floorings. The relevant test methods for determining the reaction to fire are being prepared by CEN/TC 127.

Safety warning

The attention of all persons concerned with managing and carrying out the tests described in this document is drawn to the fact that fire testing can be hazardous and that toxic and/or harmful smoke and gases can be produced during the test.

An assessment of all potential hazards and risks to health should be made and safety precautions should be identified and provided. Smoke and gases should be removed from the workplace. Written safety instructions should be issued. Appropriate training should be given to relevant personnel. Laboratory personnel should ensure that they follow written safety instructions at all times.

Special precautions are required for the propane gas supply system.

— The equipment, for example tubes, couplings, flow meters, should be approved for propane.

— The burner should be equipped with a remote-controlled ignition device, for example a pilot flame or a glow wire. There should be a warning system for leaking gas and a valve for immediate and automatic cut-off of the gas supply in case of extinction of the ignition flame. The pilot flames can be ignited directly by an operator in the test room, however, no one should be present in the test room during ignition of a burner.

— It should be possible to operate the switch between auxiliary and main (primary) burner and the preceding main valve (to open or stop the propane supply) from outside the test room.

Special precautions are required for the extinction of burning specimens.

When the extinction is carried out because of intensive combustion of the specimens, it is recommended that a second operator is ready to intervene. Means for extinguishing should be available (e.g. since the heat output during intensive combustion can damage the apparatus).

Documents
Document Sharing Hub
Full document details: BS EN 13823:2020+A1:2022

1 Scope

This document specifies a method of test for determining the reaction to fire performance of construction products excluding floorings, and excluding products which are indicated in Delegated Regulation (EU) 2016/364, when exposed to thermal attack by a single burning item (SBI). The calculation procedures are given in Annex A. Information on the precision of the test method is given in Annex B. The calibration procedures are given in Annexes C and D, of which Annex C is a normative annex.

NOTE This document has been developed to determine the reaction to fire performance of essentially flat products. The treatment of some families of products, e.g. linear products (pipes, ducts, cables etc.), can need special rules.

2 Normative references

The following documents are referred to in the text in such a way that some or all of their content constitutes requirements of this document. For dated references, only the edition cited applies. For undated references, the latest edition of the referenced document (including any amendments) applies.

EN 13238, *Reaction to fire tests for building products - Conditioning procedures and general rules for selection of substrates*

EN 13501-1:2018, *Fire classification of construction products and building elements - Part 1: Classification using data from reaction to fire tests*

EN 60584-1:2013, *Thermocouples — Part 1: EMF specifications and tolerances*

EN ISO 13943:2017, *Fire safety — Vocabulary (ISO 13943:2017)*

3 Terms and definitions

For the purposes of this document, the terms and definitions given in EN ISO 13943:2017 and EN 13501-1:2018 and the following apply.

ISO and IEC maintain terminological databases for use in standardization at the following addresses:

— IEC Electropedia: available at https://www.electropedia.org/

— ISO Online browsing platform: available at https://www.iso.org/obp/ui

3.1
backing board
calcium silicate panel used to back the specimen that can be placed directly against a free-standing test specimen or at a distance from it

3.2
specimen
piece of a product, which is to be tested

Note 1 to entry: This can include the mounting technique used in its end-use application. This also can include an air gap and/or a substrate where appropriate.

Documents
Document Sharing Hub
Full document details: BS EN 13823:2020+A1:2022

3.3
substrate
product which is used immediately beneath the product about which information is required

3.4
***THR*$_{600s}$**
total heat release from the specimen in the first 600 s of exposure to the main (primary) burner flames

3.5
LFS
lateral flame spread on the long specimen wing

Note 1 to entry: The *LFS* is defined in more detail in 8.3.3.

3.6
***TSP*$_{600s}$**
total smoke production from the specimen in the first 600 s of exposure to the main (primary) burner flames

3.7
***FIGRA*$_{0,2\ MJ}$**
fire growth rate index
maximum of the quotient of heat release rate from the specimen and the time of its occurrence using a THR-threshold of 0,2 MJ

Note 1 to entry: The *FIGRA*$_{0,2\ MJ}$ is described in more detail in A.5.3.

3.8
***FIGRA*$_{0,4\ MJ}$**
fire growth rate index
maximum of the quotient of heat release rate from the specimen and the time of its occurrence using a THR threshold of 0,4 MJ

Note 1 to entry: The *FIGRA*$_{0,4\ MJ}$ is described in more detail in A.5.3.

3.9
SMOGRA
smoke growth rate index
maximum of the quotient of smoke production rate from the specimen and the time of its occurrence

Note 1 to entry: The *SMOGRA* is described in more detail in A.6.3.

3.10
sustained flaming
persistence of flame on or over a surface for a minimum period of time

[SOURCE: EN ISO 13943:2017]

Documents
Document Sharing Hub
Full document details: BS EN 13823:2020+A1:2022

4 Test facility

4.1 General

The SBI test facility shall consist of a test room, the test apparatus (trolley, frame, burners, hood, collector and ducting), the smoke exhaust system and general measuring equipment. These components are specified in 4.2 to 4.7. Design drawings are given in Annex E. Dimensions given in the drawings are nominal unless tolerances are given in the text.

The air supply to the test room entering below the trolley should be fresh, uncontaminated air.

4.2 Test room

4.2.1 The test room shall have an inner height of (2,4 ± 0,05) m and an inner floor area of (3,0 ± 0,05) m in both directions. The walls shall be made of stone type building blocks (e.g. cellular concrete), gypsum boards, calcium silicate boards or other boards classified as class A1 or A2.

4.2.2 One wall of the test room shall have an opening to insert the trolley from the surrounding laboratory into the test room. The opening shall be at least 1 470 mm wide and 2 450 mm high (dimensions of the frame). Windows shall be placed in the two walls facing the front side of the two perpendicular specimen planes. To be able to handle the SBI apparatus and the specimen when the trolley is in place, an additional door is needed.

4.2.3 With the trolley in place in the test room, the distance between the long wing specimen surface touching the U-profile and the wall of the test room shall be (2,1 ± 0,05) m. This distance shall be measured perpendicularly to the wall facing the long wing. The areas of the openings in the test room, excluding the air inlet at the bottom of the trolley and the smoke exhaust opening in the hood, shall not exceed a total of 0,05 m^2.

4.2.4 Both left-orientated arrangements, as shown in Figure 1, and right-orientated arrangements (the trolley shown in Figure 1 mirrored around a vertical line) are allowed.

To be able to remove side plates of the hood without removing the collector, attention should be paid to the connection between the frame of the SBI apparatus and the ceiling of the room. It should be possible to move the side plate outwards at the bottom.

NOTE The relative position of the frame in the test room depends on the details of the connection between room and frame.

Documents
Document Sharing Hub
Full document details: BS EN 13823:2020+A1:2022

Dimensions in metres

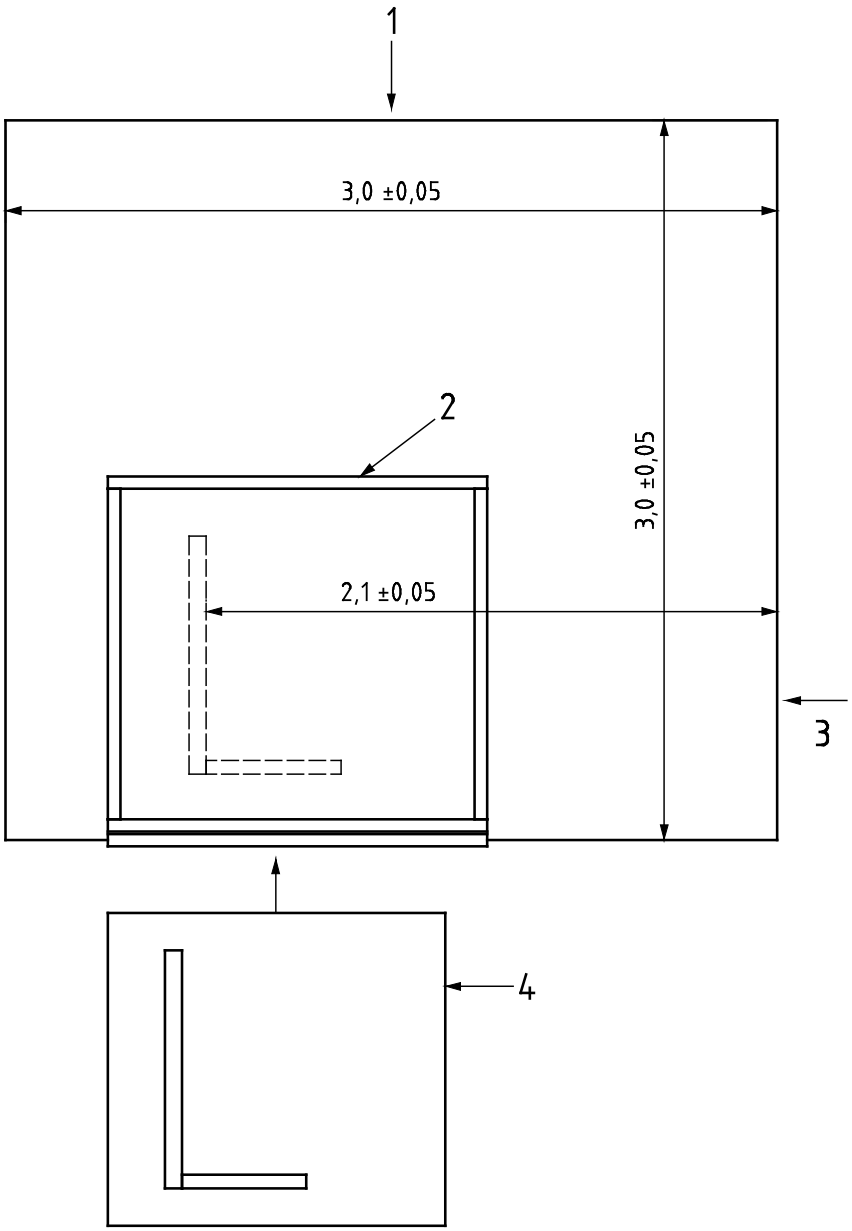

Key

1 visual observation

2 fixed frame

3 visual observation (left orientated specimen)

4 trolley (with left orientated specimen)

NOTE Both left orientated and right oriented specimens are acceptable. For right orientated specimens the figure is mirrored around a vertical line.

Figure 1 — Top view of the SBI test room design (schematic drawing)

4.3 Materials

Commercial propane, of minimum purity 95 %.

Documents
Document Sharing Hub
Full document details: BS EN 13823:2020+A1:2022

4.4 Test apparatus

NOTE See Figures E.1 to E.35.

4.4.1 Trolley, on which two perpendicular specimen parts are placed, with a sandbox burner at the bottom of the vertical corner.

The trolley is put in place with its back side closing the opening in the wall of the test room; the air inlet under the floor of the trolley is provided with perforated plates (open area to total area 40 % to 60 %; perforation diameter 8 mm to 12 mm) to produce an evenly distributed flow along the floor of the test room.

Using a spirit level placed in the gully, periodically check the level of the L profile (behind the burner) and the C profile (in front of the specimen) to ensure they are horizontal. This will ensure that any material which melts and flows from the specimen will remain in the gulley during the test.

In addition, periodically measure the level of the platform in front of the burner to ensure this is also horizontal.

4.4.2 Fixed frame, in which the trolley is pushed and which supports the hood; a second burner is fixed to the frame.

4.4.3 Hood, on top of the frame, which collects the combustion gases.

4.4.4 Collector, on top of the hood with baffles and a horizontal outlet for the exhaust duct.

4.4.5 Exhaust duct, circular tube of inner diameter (315 ± 5) mm, and insulated with 50 mm high temperature resistant mineral wool, with the following parts (in flow direction):

— connection to the collector;

— ducting, of length 500 mm with four thermocouple mountings (for optional temperature measurements) at a distance of at least 400 mm from the collector (drawing E25 part A; optional);

— ducting, of length 1 000 mm (drawing E25 part B; optional);

— two 90° bends, (radius of curvature of axis 400 mm) (drawing E25 part C and D; optional);

connection to the collector with an optional J-shaped bend;

— ducting, of length 1 625 mm with guide vanes and an orifice; guide vane length 630 mm closest to the collector at a minimum distance of 50 mm; directly behind the guide vanes a (2,0 ± 0,5) mm thick circular orifice with inner opening diameter 265 mm and an outer diameter of 314 mm (drawing E25 part E; mandatory);

— ducting, of length 2 155 mm with mountings for pressure-probe, four thermocouples, gas-sampling probe and white light extinction system; this section is called the “general measurement section” (drawing E25 part F; mandatory);

— ducting, of length 500 mm (drawing E25 part G; mandatory);

— connection to exhaust.

Attention should be paid to the fixing of the measuring duct. The total mass excluding probes, etc. is about 250 kg.

Documents
Document Sharing Hub
Full document details: BS EN 13823:2020+A1:2022

4.4.6 Two identical sandbox burners (see Figure E.9), one in the bottom plate of the trolley (the "main (primary) burner"), one fixed to a post of the frame (the "auxiliary (secondary) burner"), with the following specifications:

a) Shape: right angled triangle (top view) with two equal sides of 250 mm, height 80 mm, bottom closed except for a 12,5 mm pipe socket at the gravitational centre, top open. A right-angled triangular perforated plate shall be positioned in the burner at a height of 10 mm above the bottom. Metal gauze with a maximum mesh size of 2 mm shall be positioned at heights of 12 mm and 60 mm above the bottom. All dimensions shall be within ± 2 mm.

b) Material: box made of 1,5 mm stainless steel, filled from bottom to top with, successively, a 10 mm void, a layer of pebbles within a size distribution of 4 mm to 8 mm up to a height of 60 mm, and a top layer of sand within a size distribution of 2 mm to 4 mm up to a height of 80 mm. The metal gauze is used to stabilize the two layers and prevent the pebbles from entering the gas pipe socket. The pebbles and sand used shall be rounded (river) stones, not broken ones.

c) Position of main (primary) burner: mounted in the tray (see Figures E.9 and E.19) and connected to the U-profile at the bottom of the specimen position. The top edge of the main (primary) burner shall be (25 ± 2) mm above the top edge of the U-profile.

d) Position of auxiliary (secondary) burner: fixed to the post of the frame opposite to the specimen corner, with the top of the burner at a height of (1 450 ± 5) mm from the floor of the test room (1 000 mm vertical distance to the hood), its diagonal parallel and nearest to the hypotenuse of the main (primary) burner.

e) The main (primary) burner is connected to U-profiles at the long and the short wing specimen position (see Figure E.18, part 10). In both U-profiles a blanking plate (see Figure E.19) is placed with its top at the same height as the top of the U-profile and at 0,3 m from the corner line between the mounted specimen wings (at the border of the burner zone, see 8.3.4).

f) The main (primary) burner shall be protected with a tilted triangular grid when previous tests on the same type of product have led to an early termination to the test due to fallen material on the sand-bed in accordance with 8.5. The grid shall have a ratio of open area to total area of at least 90 %. One side of the grid shall be placed on the hypotenuse of the burner. The tilt angle is (45 ± 5)° with the horizontal, measured along the line from the hypotenuse midpoint to the specimen corner. See Figure E.36.

4.4.7 Shield of rectangular shape, width (370 ± 5) mm, height (550 ± 5) mm, made of calcium silicate board (specification the same as the backing boards), to protect the specimens from the heat flux of the flames of the auxiliary (secondary) burner.

It shall be fixed to the hypotenuse side of the auxiliary (secondary) burner, centred in the horizontal plane (shielding the total width of the diagonal plus (8 ± 3) mm at both sides) with the top edge (470 ± 5) mm above the top level of the auxiliary (secondary) burner.

4.4.8 Mass flow controller with a range of at least 0 g/s to 2,3 g/s and an accuracy of 1 % of the reading for the range 0,6 g/s to 2,3 g/s. The mass flow controller shall be calibrated annualy.

NOTE The propane flow of 2,3 g/s corresponds to a heat release of 107 kW using the effective lower heat of combustion of propane (46 360 kJ/kg). The accuracy of 1 % is when either using air, nitrogen or propane.

Documents
Document Sharing Hub
Full document details: BS EN 13823:2020+A1:2022

4.4.9 Switch, used to supply propane to either of the burners.

The switch shall prevent propane being supplied to both burners at the same time, except during burner switching time (the short period of time in which the auxiliary (secondary) burner is decreasing and the main (primary) burner is increasing in output). This burner switch response time, [A1⟩ determined in the step calibration and ⟨A1] calculated in accordance with C.2.1, shall be between 9 s and 12 s.

It shall be possible to operate the switch and the preceding main valve from outside the testing room.

4.4.10 Backing boards, used to back the specimen wings in the trolley.

The backing boards shall be high density calcium silicate boards as defined in EN 13238 with a thickness of (12 ± 3) mm. The dimensions of the backing boards shall be:

a) for the short wing: (at least 570 + thickness of the specimen) mm × (1 500 ± 5) mm;

b) for the long wing: (1 000 ± 5) mm × (1 500 ± 5) mm.

On the short wing, the backing board is wider than the specimen. The additional width shall extend at one side only. [A1⟩ For specimens mounted with an air gap, the width of the backing board for the long wing shall be increased by an amount equal to the size of the air gap. ⟨A1]

4.4.11 Removable panel parts, to allow for additional airflow behind both specimen wings panels 22 and 25 in Figure E.20 shall be replaced by half panels, covering only the upper half of the space covered by panels 22 and 25.

The panel shall only be removed under the conditions given in 5.2.2, a).

4.5 Smoke exhaust system

4.5.1 Under test conditions, the smoke exhaust shall be capable of continuously extracting a volume flow, normalized to 298 K, of 0,50 m^3/s to 0,65 m^3/s.

4.5.2 The exhaust duct shall have two side ducts (circular tubes of inner diameter 45 mm) horizontally perpendicular to and at the height of the longitudinal axis of the exhaust duct (see Figures E.32 and E.33).

4.5.3 The two possible configurations of the extraction duct are given in Figure E.1. The trolley opening in the test room is at the topside in the configuration drawings. The orientation of the duct may deviate from Figure E.1 if proof is provided that this does not change the airflow over the specimen. Removal of the 180° bend in the extraction duct and replacement of the hemispherical pressure probe are acceptable, provided that it is proved that the uncertainty in flow measurement is equal or better.

NOTE Due to changes in heat output, some exhaust systems (especially those provided with local fans) can need manual or automatic readjustment during tests, to meet the requirement given in 4.5.1.

The duct should be cleaned at intervals to avoid excessive accumulation of soot.

4.6 General measurement section equipment

NOTE See Figures E.28 to E.35.

4.6.1 Three thermocouples, all of the K-type in accordance with EN 60584-1:2013, diameter in the range 0,5 mm to 1 mm, sheathed and insulated.

Documents
Document Sharing Hub
Full document details: BS EN 13823:2020+A1:2022

The position of the tips shall be at a radius of (87 ± 5) mm from the axis and with 120° mutual angular distance.

4.6.2 Hemispherical probe, connected to a pressure transducer with a range of at least 0 Pa to 100 Pa, and an accuracy of ± 2 Pa. [A1⟩ The opening of the sphere of the hemispherical probe shall face the incoming flow. ⟨A1] (See reference [4].)

The pressure transducer output shall have a 90 % response time of 1 s or better.

4.6.3 Gas sampling probe, connected to a gas conditioning unit and gas analysers for O_2 and CO_2.

a) The O_2 analyser shall be of the paramagnetic type and capable of measuring at least a range of 16 % to 21 % oxygen (V_{O2}/V_{air}). The response time of the analyser shall be not more than 12 s (as measured in accordance with C.2.2). The noise and drift of the analyser shall be not more than 100 ppm over a period of 30 min (both as measured in accordance with C.1.3). The output from the analyser to the data acquisition system shall have a resolution of maximum 100 ppm.

b) The CO_2 analyser shall be of the IR type and capable of measuring at least a range of 0 % to 10 % carbon dioxide. The linearity of the analyser shall be 1 % of full scale or better. The response time of the analyser shall be not more than 12 s (as measured in accordance with C.2.2). The output from the analyser to the data acquisition system shall have a resolution of maximum 100 ppm.

4.6.4 Light attenuation system, of the white light type, mounted with a flexible connection to the side ducts of the exhaust duct, and consisting of the following:

a) *Lamp,* of the incandescent filament type and operating at a colour temperature of (2 900 ± 100) K. The lamp shall be supplied with stabilized direct current, stable within ± 0,5 % (including temperature, short-term and long-term stability).

b) *Lens system*, to align the light to a parallel beam with a diameter of at least 20 mm. The photocell aperture shall be placed at the focus of the lens in front of it and it shall have a diameter, d, chosen with regard to the focal length of the lens, f, so that d/f is less than 0,04.

c) *Detector,* with a spectrally distributed responsivity agreeing with the CIE, V(γ)-function (the CIE photopic curves) to an accuracy of at least ± 5 %. The detector output shall, over an output range of at least two decades, be linear within 3 % of the measured transmission value or 1 % of the absolute transmission.

For the calibration of the light attenuation system, see C.1.5. The 90 % response time of the system shall be not more than 3 s.

To prevent smoke being trapped in the side ducts and the deposition of soot on the optics, air shall be introduced into the side ducts either by self-suction or pressurized airflow. If pressurized airflow is used, the flow rate shall be no more than 5 l/min.

4.7 Other general equipment

4.7.1 Thermocouple, of the K-type in accordance with EN 60584-1:2013, diameter (2 ± 1) mm, installed on the outer wall of the testing room within 0,20 m of the trolley opening and less than 0,20 m above the floor, for measuring the ambient temperature of the air flow into the test room.

Documents
Document Sharing Hub
Full document details: BS EN 13823:2020+A1:2022

4.7.2 Equipment for measuring the ambient pressure, having an accuracy of ± 200 Pa (2 mbar).

4.7.3 Equipment for measuring the relative ambient air humidity, having an accuracy of ± 5 % within the range 20 % to 80 %.

4.7.4 Data acquisition system (used to record the data automatically) having an accuracy equal to or better than 100 ppm (0,01 %) for O_2 and CO_2, 0,5 °C for the temperature measurements, 0,01 % of full scale instrument output for all other instruments and 0,1 s for time.

The data acquisition system shall record and store the following quantities every 3 s (information on a data file format is given in Annex F):

a) time, in seconds;

b) mass flow of propane gas through the burner, in milligrams per second;

c) pressure difference from the hemispherical probe, in pascals;

d) relative light intensity, dimensionless;

e) O_2 concentration, in (V_{O2}/V_{air}) %;

f) CO_2 concentration, in (V_{CO2}/V_{air}) %;

g) ambient temperature at air inlet at bottom of trolley, in kelvins;

h) three temperatures in general measurement section, in kelvins.

5 Test specimen

5.1 Dimensions of specimen

5.1.1 The corner specimen consists of two wings, designated the short and long wings. The maximum thickness of a specimen is 200 mm.

Sheet products shall have the following dimensions:

a) short wing: (495 ± 5) mm × (1 500 ± 5) mm;

b) long wing: (1 000 ± 5) mm × (1 500 ± 5) mm.

NOTE If additional products are used to construct the specimen (in accordance with 5.3.2), the given dimensions refer to the total specimen dimensions.

5.1.2 Specimens with a thickness of more than 200 mm shall be reduced to a thickness of 200^{0}_{-10} mm by cutting away the unexposed surface, unless otherwise specified in the product specification.

5.1.3 Two horizontal lines shall be drawn on the front side of the long wing near the edge of the specimen farthest from the corner, to allow for observation of lateral flame spread reaching the edge between a height of (500 ± 3) mm and (1 000 ± 3) mm above the bottom edge of the specimen. Each line width shall be a maximum of 3 mm.

Documents
Document Sharing Hub
Full document details: BS EN 13823:2020+A1:2022

5.2 Mounting of specimen

5.2.1 Mounting as in end use application

When products are tested, mounted as in their end use application, the test results are valid only for that application.

5.2.2 Standard mounting

When products are tested using a standard mounting, the test results are valid for that end use application and can be valid for a wider range of end use applications. The standard mounting used and its range of validity shall be in accordance with the relevant product specifications, and the following:

a) Boards that are free standing in their end use application shall be tested free standing at a distance of at least 80 mm from the backing board. Boards that have in the end use application a ventilated cavity behind it shall be tested with a cavity of at least 40 mm width as well as with the smallest possible cavity width in the end-use application. For these two types of boards the sides of the cavity farthest away from the corner shall be open, the panels in accordance with 4.4.11 shall be removed and the cavities behind both specimen wings shall be in open connection. For other types of boards the sides of the cavity farthest away from the corner shall be closed, the panels in accordance with 4.4.11 shall be in place and the cavities behind both specimen wings shall not be in open connection.

b) Boards that are fixed mechanically to a substrate in the end use application shall be tested fixed to a substrate using appropriate fixings. Fixings that stick out of the specimen surface shall be placed in such a way that the specimen wing can be placed against the U-profile at the bottom and against the other specimen wing at its side, over its full length.

c) Boards that in their end use application are fixed mechanically to a substrate with a cavity behind it shall be tested with a cavity between substrate and backing board. The distance between the substrate and the backing board shall be at least 40 mm.

d) Products that in their end use application are glued to a substrate shall be tested glued to a substrate.

e) Products tested with a horizontal joint shall be tested with a horizontal joint in the long wing at a height of 500 mm from the bottom edge of the specimen. Products tested with a vertical joint shall be tested with a vertical joint in the long wing at a distance of 200 mm from the corner line, measured when the wings are mounted ready for testing. The centre line of the joint is decisive.

NOTE 1 The bottom edge of the specimen is not visible when the specimen is installed in the trolley. The height is measured from the bottom edge of the specimen, not from the top of the U-profile of the trolley.

f) Multi-layered products with air channels shall be tested with vertical channels.

g) Standard substrates shall meet the requirements of EN 13238. The dimensions of the substrates shall be in accordance with the dimensions of the specimens (see 5.1.1):

   1) for the short wing, the substrate shall be the length of the small wing plus the specimen and substrate thickness;

   2) the substrate for the long wing shall be identical to the lateral and vertical dimensions of the specimen.

Documents
Document Sharing Hub
Full document details: BS EN 13823:2020+A1:2022

h) Non-flat products shall be tested in such a way that not more than 30 % of a representative area of 250 mm by 250 mm of the exposed surface area is more than 10 mm behind the vertical plane through the rear side of the U-profile. Non-flat products may be reshaped and/or may partly extend over the U-profile to the side of the burner to fulfil this requirement. A product shall not extend over the burner (i.e. maximum extension over the U-profile is 40 mm).

i) If a product is not normally produced in a size large enough to provide one single test specimen for each specimen side, a special specimen shall be prepared as follows:

   Installation of full size products should be started at the bottom of the corner joint between both wings. The specimen shall then be constructed from full size pieces of the product radiating outwards from this bottom corner so that the cut pieces are located at the edges of the specimen walls.

   Where the horizontal and/or vertical joint, in accordance with 5.2.2, e), is present in the test specimen, the positioning of the joints shall always prevail. The area of the parts of the long wing formed as a consequence of the horizontal and/or vertical joints shall be filled with full size products starting at the bottom corner, and again, with full size pieces, at the corner between the horizontal and vertical joints.

Products are mounted for testing against the rear side of the U-profile (see 5.3.1). A mounted, totally flat product is therefore positioned in the vertical plane against the rear of the U-profile. Since the position of the surface influences the heat received from the burner flames, the major parts of a non-flat product should not be far behind the vertical plane through the rear side of the U-profile.

NOTE 2 Figure 2 is an example of an arrangement of the specimen and backing board.

Documents
Document Sharing Hub

Full document details: BS EN 13823:2020+A1:2022

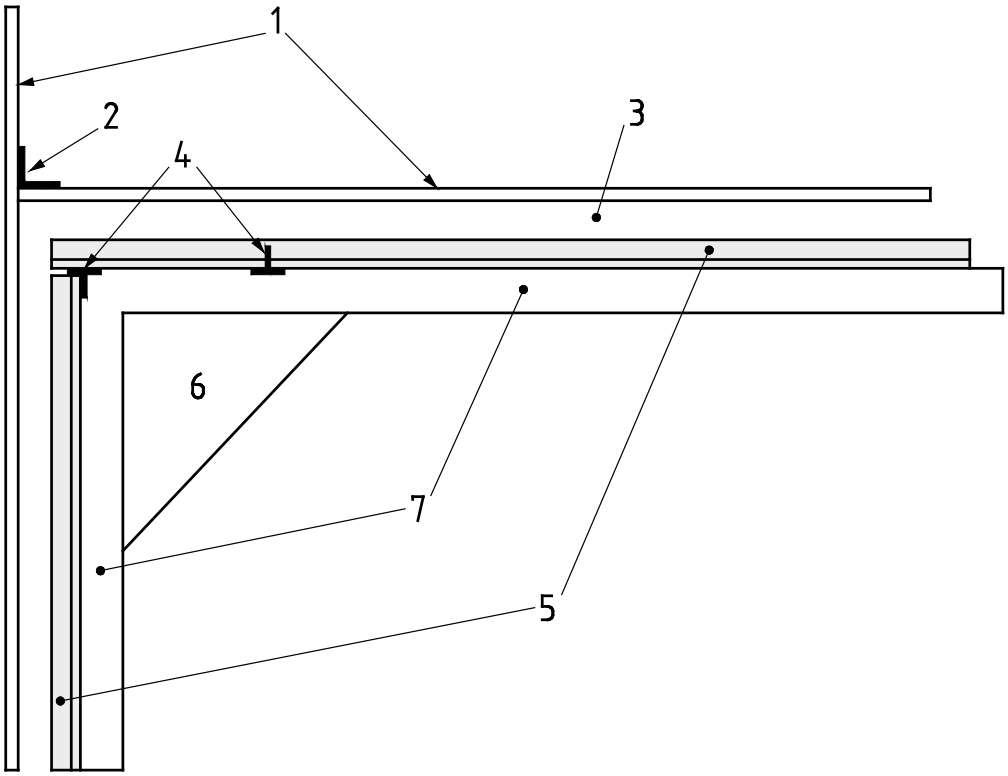

Key

1 backing boards
2 L-profile
3 air gap
4 joints
5 specimen wings
6 burner
7 U-profiles

Figure 2 — Example of corner configuration

5.3 Installation of the specimen wings in the trolley

5.3.1 The specimen wings shall be placed in the trolley as follows:

a) The short wing specimen and backing board are placed on the trolley, with the extending part of the backing board at the main (primary) burner side and the bottom edge of the specimen against the short U-profile on the trolley floor.

b) The long wing specimen and backing board are placed on the trolley, with the side edge of the backing board against the extending backing board of the short wing and the bottom edge of the specimen against the long U-profile on the trolley floor.

c) Both wings shall be clamped at the top and the bottom.

d) To ensure that the corner joint within the backing boards does not widen during the test, a metallic L-profile, length 1 500 mm, shall be placed against the reverse side edge of the corner formed between the two wings. Connect the L-profile to the backing boards using fixings at a maximum of 250 mm centres.

Documents
Document Sharing Hub
Full document details: BS EN 13823:2020+A1:2022

5.3.2 The exposed edges of the products and the joint in the corner may be protected using additional products, if this is in accordance with its end use application. When additional products are used, the width of the wings including the additional product shall be in accordance with 5.1.1.

5.3.3 After installation of the specimen on the trolley, the following aspects shall be photographed:

a) A total view of the exposed surface of the long wing. The centre point of the long wing shall be in the centre of the view. The camera shall be directed perpendicular to the surface of the long wing.

b) A close-up of the vertical outer edge of the long wing at a height of 500 mm above the floor of the trolley. The camera angle shall be horizontal and at about 45° to the vertical plane of the wing.

c) If additional products (in accordance with 5.3.2) are used a close-up of the edges and/or joints where the products are applied.

5.4 Number of specimens

At least three specimens (three sets of long plus short wing) shall be tested in accordance with Clause 8.

If the product being tested has an orientational effect and this document or the product standard does not specify the orientation which has to be tested, the one specimen of the product shall be tested once in both directions. The test shall then be completed by test on the configuration with the worst classification parameters a further two times. This is only valid if one orientation has worse results for all classification parameters ($FIGRA_{0,2\,MJ}$, $FIGRA_{0,4\,MJ}$, THR_{600s}, *SMOGRA*, TSP_{600s}, *LSF*, burning droplets/particles). If some parameters are worse in one direction and others in the other direction, three specimen shall be tested in both directions.

6 Conditioning

6.1 The conditioning shall be in accordance with EN 13238 and the requirements of 6.2.

6.2 The parts that compose a specimen may be conditioned separately or fixed together. However, specimens that are tested glued to a substrate shall be glued before conditioning.

NOTE Reaching constant mass can take longer for specimens that are fixed together.

7 Principle

A test specimen, consisting of two vertical wings forming a right-angled corner, is exposed to the flames from a burner placed at the bottom of the corner (the “main (primary) burner”). The flames are obtained by combustion of propane gas, diffused through a sandbox and give a heat output of (30,7 ± 2,0) kW.

The performance of the test specimen is evaluated over a period of 20 min. The performance parameters are: heat production, smoke production, lateral (horizontal) flame spread and falling flaming droplets and particles.

A short period before ignition of the main (primary) burner is used to measure the heat output and smoke development of the burner only, using an identical burner away from the specimen (the “auxiliary (secondary) burner”).

Documents
Document Sharing Hub
Full document details: BS EN 13823:2020+A1:2022

Some measurements are performed automatically, some are made by visual observation. The exhaust duct is equipped with sensors to measure the temperature, light attenuation, O_2 and CO_2 mole fraction and a flow induced pressure difference in the duct. These quantities are recorded automatically and used to calculate the volume flow, the heat release rate (*HRR*) and the smoke production rate (*SPR*).

Visual observations are made of the horizontal flame spread and falling of flaming droplets and particles.

8 Test procedure

8.1 General

Perform the steps in 8.2 in sequence, with the measuring equipment operating and the trolley with the test specimen and the main (primary) burner placed in the frame, under the hood. The entire testing procedure until the end of the test shall be carried out within 2 h of removal of the specimen from the conditioning environment.

All electronic devices and pumps shall be switched on sufficiently long beforehand to reach equilibrium before conducting any calibration or testing.

Half an hour has been found suitable for most devices. The stabilization time of gas-analysers however is much longer. It is recommended that the gas-analysers remain on all the time.

8.2 Testing operations

Set the volume flow of the exhaust, V_{298}(t), to (0,60 ± 0,05) m³/s [(calculated in accordance with A.5.1.1, a))]. This volume flow shall be within the range 0,50 m³/s to 0,65 m³/s during the total test period.

NOTE Due to changes in heat output, some exhaust systems (especially those provided with local fans) can need manual or automatic readjustment during the test, to meet the requirement given.

8.2.2 Record the temperatures T_1, T_2 and T_3 of the thermocouples in the exhaust duct and the ambient temperature for at least 300 s. The ambient temperature shall be within (20 ± 10) °C, and the temperatures in the duct shall not differ more than 6 °C from the ambient temperature.

8.2.3 Ignite the pilot flames of both burners (if pilot flames are used). Changes in the gas supply to the pilot flames during the tests shall not exceed 5 mg/s.

8.2.4 Record the pre-test conditions. The data to be recorded are given in 8.3.2.

8.2.5 Start the time measurement with the chronometer and the automatic recording of data. The time of start is t = 0 s. The data to be recorded are given in 8.4.

8.2.6 At t = (120 ± 5) s: Ignite the auxiliary (secondary) burner and adjust the propane mass flow m_{gas} to (647 ± 10) mg/s. The adjustments shall be made before t = 150 s. The mass flow shall be within this range during the total test period.

NOTE The time period 210 s < t < 270 s is used to measure the base line for the heat release rate.

8.2.7 At t = (300 ± 5) s: Switch the propane supply from the auxiliary (secondary) burner to the main (primary) burner.

Documents
Document Sharing Hub
Full document details: BS EN 13823:2020+A1:2022

8.2.8 Observe the burning behaviour of the specimen for a period of 1 260 s and record the data on the record sheet. The data to be recorded are given in 8.3.3 and 8.3.4.

NOTE The nominal exposure period of the specimen to the flames of the main (primary) burner is 1 260 s. The performance is evaluated over a period of 1 200 s.

8.2.9 At $t \geq 1\,560$ s:

a) terminate the gas supply to the burner;

b) stop the automatic recording of data.

8.2.10 Record the end of test conditions on the record sheet at least 1 min after any remaining combustion of the specimen has been totally extinguished. The data to be recorded are given in 8.3.5.

The end of test conditions should be recorded without the influence of remaining combustion. If the specimen is difficult to extinguish totally, the trolley can be removed.

8.3 Visual observation and manual recording of data

8.3.1 General

The quantities mentioned in this clause shall be observed visually and recorded in the format given. The observer shall be provided with a chronometer equipped with an event logger. The observations shall be recorded on a record sheet, of which an example is given in Annex G.

8.3.2 Pre-test conditions

The following quantities shall be recorded:

a) ambient pressure (Pa);

b) ambient relative humidity (%H_2O);

c) ambient temperature (°C).

8.3.3 Lateral flame spread on the long wing

The lateral (horizontal) flame spread shall be recorded as the occurrence of sustained flames reaching the far edge of the long wing specimen at any height between 500 mm and 1 000 mm at any time during the test. The determining phenomenon shall be the boundary of sustained flaming for a minimum period of 5 s at the surface of the specimen.

If the lateral flame spread criteria is not met, additional tests may be conducted, at request of the sponsor, with the large wing having a width of 1 m plus the thickness of the specimen.

If in three additional tests the flame does not reach the edge of the long wing, the LFS criterion shall be considered to be met.

8.3.4 Flaming particles or droplets

If flaming particles or droplets are expected, the test shall be recorded continuously using a suitable high resolution camera.

Documents
Document Sharing Hub
Full document details: BS EN 13823:2020+A1:2022

The fall of flaming droplets or particles shall be recorded only within the first 600 s of the exposure period and only when the droplets/particles reach the floor level of the trolley (the level of the lower edge of the specimen) outside the burner zone. The burner zone is defined as the trolley floor area at the front side of the specimen wings, less than 0,3 m from the corner line between the specimen wings, as illustrated in Figure 3. The following occurrences shall be recorded:

a) the fall of a flaming droplet/particle, in the given time interval and area, that remains flaming for not more than 10 s after falling;

b) the fall of a flaming droplet/particle, in the given time interval and area, that remains flaming for more than 10 s after falling.

A quarter circle drawn on the floor of the trolley is needed to mark the boundary of the burner zone. The line width shall be less than 3 mm.

Flaming parts of the specimen touching the floor of the trolley outside the burner zone should be regarded as fallen particles although the part concerned can still be an integral part of the specimen (e.g. bending of a weakened product).

NOTE To prevent molten material from flowing from inside to outside the burner zone, an obstruction plate is placed in both long and short wing U-profiles on the border of the burner zone (see 4.4.6).

Dimensions in millimetres

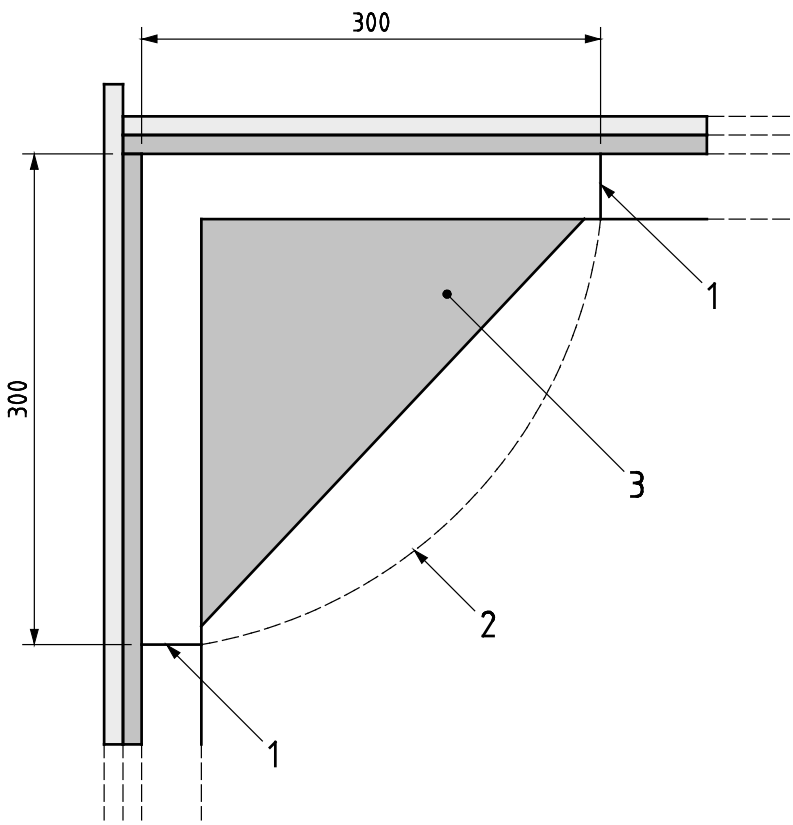

Key

1 obstruction plate I U-profile

2 burner zone border

3 burner

Figure 3 — Burner zone

Documents
Document Sharing Hub
Full document details: BS EN 13823:2020+A1:2022

8.3.5 End of test conditions

The following quantities shall be recorded:

a) light transmission at the "general measuring section" in the exhaust duct (%);

b) O_2 mole fraction at the "general measuring section" in the exhaust duct;

c) CO_2 mole fraction at the "general measuring section" in the exhaust duct.

8.3.6 Recorded events

The following events shall be recorded:

a) occurrence of a surface flash;

b) smoke from the specimen not entering the hood during the test, but flowing out of the trolley into the surrounding testing room;

c) falling of parts of the specimen;

d) development of a gap in the corner (failure of mutual fixing of backing boards);

e) occurrence of one or more of the conditions which justify an early termination of the test in accordance with 8.5;

f) occurrence of distortion or collapse of the specimen;

g) all additional events that may be of importance to the correct interpretation of the test results or to the field of application of the product.

8.4 Automated recording of data

8.4.1 The quantities given in 8.4.2 to 8.4.9 shall be measured and recorded automatically every 3 s during the period specified in 8.2 and shall be stored for further processing.

8.4.2 Time (t), in seconds; at the start of recording of data, $t = 0$ by definition.

8.4.3 Mass flow rate of propane gas to the burner (m_{gas}) in milligrams per second.

8.4.4 Pressure difference over the hemispherical probe (Δp), at the general measuring section in the exhaust duct, in pascals.

8.4.5 Signal from the light receiver (I), of the white light system at the general measuring section in the exhaust duct, in percent.

8.4.6 O_2 mole fraction in exhaust flow (xO_2), sampled at the gas sampling probe in the general measuring section in the exhaust duct.

8.4.7 CO_2 mole fraction in exhaust flow (xCO_2), sampled at the gas sampling probe in the general measuring section in the exhaust duct.

The oxygen and carbon dioxide concentrations are measured only in the exhaust duct; both concentrations are assumed to be constant in the air that enters the test room. It should be noted that the air supplied from a space where oxygen is consumed (e.g. by fire tests) cannot fulfil this assumption. Also applies for 8.4.6.

Documents
Document Sharing Hub
Full document details: BS EN 13823:2020+A1:2022

8.4.8 Ambient temperature (T_0) at the air inlet at the bottom of the trolley, in kelvins.

8.4.9 The three temperatures (T_1, T_2 and T_3) in the general measuring section in the exhaust duct, in kelvins.

8.5 Early termination of test

The main (primary) burner shall be stopped earlier than the nominal exposure period if the material falls onto the sand-bed of the burner that substantially disturbs the flame of the burner or extinguishes the burner by choking.

Note that consideration should be given to the early termination of the test if half the burner is blocked by fallen material.

Record the time of termination of the gas supply to the burner and the reason why.

The results of a test are not valid for classification purposes when an early termination of the test has occurred.

NOTE An early termination of the test can be prevented by the use of a grid in accordance with 4.4.6.

The following occurrences may damage the test apparatus:

a) a heat release rate of the specimen exceeding 350 kW at any instant, or exceeding 280 kW over a period of 30 s; or

b) an exhaust duct temperature exceeding 400 °C at any instant, or exceeding a mean value of 300 °C over a period of 30 s.

If the above limits are exceeded the operator may consider an early termination of the test. Measured values for the temperature and the heat release rate will contain a certain amount of noise. It is therefore advised not to stop the test on the basis of only one or two successive measurement values from the instruments exceeding the given maximums.

9 Expression of results

9.1 For each test, the burning behaviour of the product shall be represented by graphs of average heat release rate $HRR_{av}(t)$, total heat release $THR(t)$, and $1\,000 \times HRR_{av}(t)/(t - 300)$, for the time interval $0 \leq t \leq 1\,500$ s; the values for the fire growth rate indices $FIGRA_{0,2\,MJ}$ and $FIGRA_{0,4\,MJ}$, and the total heat release within 600 s THR_{600s}, calculated in accordance with A.5, and the occurrence or not of lateral flame spread up to the edge of the specimen in accordance with 8.3.3.

9.2 For each test, the smoke production behaviour of the product shall be given as the graphs of $SPR_{av}(t)$, total smoke production $TSP(t)$ and $10\,000 \times SPR_{av}(t)/(t - 300)$, for the time interval $0 \leq t \leq 1\,500$ s; and the values for the smoke growth rate index $SMOGRA$ and the total smoke production within 600 s TSP_{600s}, calculated in accordance with A.6.

9.3 For each test, the behaviour of the product regarding the production of flaming droplets and particles shall be given as the occurrence, or not, of one or both categories of fallen flaming droplets and particles, in accordance with 8.3.4, a) or b) respectively.

Documents
Document Sharing Hub
Full document details: BS EN 13823:2020+A1:2022

10 Test report

The test report shall include the following information. A clear distinction shall be made between the data provided by the sponsor and data determined by the test:

a) a reference that the test was carried out in accordance with this document;

b) any deviations from the test method;

c) name and address of the testing laboratory;

d) date and identification number of the report;

e) name and address of the sponsor;

f) name and address of the manufacturer/supplier, if known;

g) date of sample arrival;

h) identification of the product;

i) description of the sampling procedure, where relevant;

j) a general description of the product tested including the density, mass per unit area and thickness, together with the form of construction of the test specimen;

k) description of substrate and fixing to the substrate (if used);

l) details of conditioning;

m) date of test;

n) test results expressed in accordance with Clause 9 including method of smoke calculation (A.6.1.2);

o) photographs in accordance with 5.3.3;

p) observations made during the test;

q) the following statement: “The test results relate to the behaviour of the test specimens of a product under the particular conditions of the test; they are not intended to be the sole criterion for assessing the potential fire hazard of the product in use”.

Documents
Document Sharing Hub

Full document details: BS EN 13823:2020+A1:2022

Annex A
(normative)

Calculation procedures

A.1 General

A.1.1 General remarks

A.1.1.1 General

The test procedure is described in Clause 8. Some information is repeated here for convenience.

a) Major events during this procedure are:

1) $t = 0$ s : start data acquisition;

2) $t = (120 \pm 5)$ s : start auxiliary (secondary) burner;

3) $t = (300 \pm 5)$ s : switch from auxiliary to main (primary) burner;

4) $t \geq 1\,560$ s : stop main (primary) burner and stop data acquisition.

b) The performance of the specimen is evaluated during the first 1 200 s (300 s ≤ t ≤ 1 500 s) in which the specimen is exposed to the flames of the main (primary) burner. This period is called the exposure period.

c) Due to the use of time-averaged quantities, accepted inaccuracies and delay times, a maximum of 60 s additional data under burner flame exposed conditions (after t = 1 500 s) is needed.

d) The time interval 210 s ≤ t ≤ 270 s is used to do measurements on the burner heat output only. This interval is called the base line period. After t = 300 s the average burner heat output during the base line period is subtracted from the total heat output of burner and specimen, to get the output of the specimen only.

The average burner smoke base line output is determined from the test described in Clause A.6.1.2. In a product test, after t = 300 s the average burner smoke base line output (as determined in A.6.1.2) is subtracted from the total smoke output of burner and specimen, to get the output of the specimen only.

e) The following "raw" data are recorded every 3 s for 1 560 s: gas flow, pressure difference, light attenuation, oxygen and carbon dioxide concentration and the ambient and smoke temperatures, all in accordance with 8.4.

A.1.1.2 Notation

In this annex, a simplified notation is used for averages over a time period:

$\bar{f}(t_1 \ldots t_2)$ is defined as the average value of $f(t)$, in the time period $t_1 \leq t \leq t_2$

Documents
Document Sharing Hub
Full document details: BS EN 13823:2020+A1:2022

A.1.2 Calculations to be performed on the test data

After a test, a series of parameters shall be calculated to evaluate the performance of the product. All calculations in this annex, excluding the calculations in A.2, shall be performed on data shifted in time in accordance with A.2. The following calculations shall be carried out:

— synchronization of data;

— calculation of equipment response;

— calculation of exposure period;

— calculation of $HRR(t)$;

— calculation of time-averaged $HRR(t)$: $HRR_{30s}(t)$;

— calculation of $THR(t)$ and THR_{600s};

— calculation of $FIGRA_{0,2MJ}$ and $FIGRA_{0,4MJ}$;

— calculation of $SPR(t)$;

— calculation of time-averaged $SPR(t)$: $SPR_{60s}(t)$;

— calculation of $TSP(t)$ and TSP_{600s};

— calculation of $SMOGRA$.

The results of a test are valid only when the requirements of A.2 and A.3 have been met. The calculations are specified in A.2 to A.6.

A.1.3 Calculations to be performed on calibration data

The calibration procedures are specified in Annex C. The quantities to be calculated are specified in A.7 if not already specified in A.2 to A.6 as part of the analysis of standard test data.

A.1.4 Standard data set

As the calculation methods are complex a standard data set can be used to verify the calculation steps and benchmark software.

A.2 Synchronization of data

A.2.1 O_2 and CO_2 synchronization with T_{ms}.

Due to the switch from auxiliary to main (primary) burner, the major quantities measured show a short peak or dip at the same moment in time. These peaks and dips are used to synchronize the data. It is assumed that this automatic synchronization procedure and/or the measured delay times are erroneous if the shift calculated by this automatic synchronization procedure differs by more than 6 s from the delay times of the analysers determined in the calibration procedure according to C.2.2.

Documents
Document Sharing Hub
Full document details: BS EN 13823:2020+A1:2022

a) Shift the O_2 and CO_2 data for the delay times found during calibration in accordance with C.2.2.

b) The time t_{0_T} is calculated as the time of the last data point before the temperature in the general measurement section $T_{ms}(t)$ drops by more than 2,5 K, after t = 270 s, relative to the average of T_{ms} during the base line period (210 s ≤ t ≤ 270 s):

$$\overline{T}_{ms}(210\text{ s...}270\text{ s}) - T_{ms}(t_{0_T}) \leq 2{,}5\text{K} \wedge \overline{T}_{ms}(210\text{ s...}270\text{ s}) - T_{ms}(t_{0_T} + 3) > 2{,}5\text{K} \quad \text{(A.1)}$$

where

$T_{ms}(t)$ is the temperature in the general measurement section calculated according to [A1] A.3.1 [A1].

c) The time t_{0_O2} is calculated as the time of the last data point before the oxygen concentration rises by more than 0,05 % (500 ppm), after t = 270 s, relative to the average during the base line period (210 s ≤ t ≤ 270 s):

$$xO_2(t_{0_O2}) - \overline{xO_2}(210\text{ s...}270\text{ s}) \leq 0{,}05\,\% \wedge xO_2(t_{0_O2} + 3) - \overline{xO_2}(210\text{ s...}270\text{ s}) > 0{,}05\,\% \quad \text{(A.2)}$$

where

xO_2 is the oxygen concentration in mole fraction.

d) The time t_{0_CO2} is calculated as the time of the last data point before the carbon dioxide concentration xCO_2 drops more than 0,02 % (200 ppm), after t = 270 s, relative to the average during the base line period (210 s ≤ t ≤ 270 s):

$$\overline{xCO_2}(210\text{ s...}270\text{ s}) - xCO_2(t_{0_CO2}) \leq 0{,}02\,\% \wedge \overline{xCO_2}(210\text{ s...}270\text{ s}) - xCO_2(t_{0_CO2} + 3) > 0{,}02\,\% \quad \text{(A.3)}$$

where

xCO_2 is the carbon dioxide concentration in mole fraction.

e) The oxygen and carbon dioxide data are shifted so that the O_2 peak and the CO_2 dip coincides with the dip in T_{ms} (such that $t_{0_T} = t_{0_O2} = t_{0_CO2}$). Both shifts shall not be more than 6 s.

$$xO_2(t) = xO_2(t - t_{0_T} + t_{0_O2}) \quad \text{(A.4)}$$

where

xO_2 is the oxygen concentration in mole fraction;

t_{0_O2} is the time as specified in c);

t_{0_T} is the time as specified in b).

The same equation is valid for CO_2 after replacement of O_2 by CO_2 in the formula.

NOTE In some cases, the peaks and dips used for synchronisation can be too small to be found with the procedure presented here. In those cases, a visual assessment of t_{0_T}, t_{0_O2} and/or t_{0_CO2} is acceptable.

Documents
Document Sharing Hub
Full document details: BS EN 13823:2020+A1:2022

A.2.2 Shift all data to t = 300 s.

After the O_2 and CO_2 synchronization with T_{ms}, the time is shifted for all data such that $t_0 = t_{0_T} = t_{0_O2} = t_{0_CO2}$ = 300 s for convenience. This shift shall be less than 15 s.

NOTE Here all data (m_{gas}, Δp, I, xO_2, xCO_2, T_0, T_1, T_2, T_3 and T_{ms}) are shifted in time together. In A.2.1, e), the O_2 and CO_2 data were shifted in time relative to the other data.

A.2.3 All calculations in A.3 to A.6 shall be performed on data shifted in time in accordance with this clause.

A.3 Checking equipment response

A.3.1 Temperature readings

The temperature readings of thermocouples 1, 2 and 3, all mounted in the general measurement section, shall differ by not more than 1 % of the average value.

T_{ms} [= (T_1 + T_2 + T_3)/3] at any time in more than ten data points with the exception of the following.

If one thermocouple differs by more than 1 % from T_{ms} in more than ten data points and the two remaining thermocouples do not differ more than 1 % from their average in more than ten data points, that thermocouple shall be fully excluded from the calculation of T_{ms} in this test. In other cases all thermocouples shall be used to calculate T_{ms}. The use of only two thermocouples shall be mentioned in the test report.

NOTE 1 This requirement is given to exclude thermocouples that malfunction. A deviation by more than 1 % in only a few data points is not assumed to be the result of a malfunction.

NOTE 2 For the start of tests or calibrations, additional criteria for temperatures are given.

A.3.2 Drift in gas concentration measurement

The drift in both xO_2 and xCO_2 gas concentration measurements is calculated as the difference between the start values calculated as xO_2(30 s...90 s) and xCO_2(30 s...90 s) respectively, and the end values obtained by visual recording after a period of at least 60 s, in which no combustion products enter the exhaust duct.

Criteria:

$$| xO_{2_begin} - xO_{2_end} | \leq 0{,}02\% \quad \text{(A.5)}$$

$$| xCO_{2_begin} - xCO2_{_end} | \leq 0{,}02\ \% \quad \text{(A.6)}$$

where

xO_2 is the oxygen concentration in mole fraction;

xCO_2 is the carbon dioxide concentration in mole fraction.

A.3.3 Drift in light attenuation measurement

The drift in the light attenuation measurement I is calculated as the difference between the start value, calculated as I (30 s…90s) and the end value, obtained by visual recording after a period of at least 60 s in which no combustion products enter the exhaust duct.

Documents
Document Sharing Hub
Full document details: BS EN 13823:2020+A1:2022

Criterion:

$$|I_{begin} - I_{end}|/I_{begin} \leq 0{,}02 \quad \text{(A.7)}$$

where

I is the signal from the light receiver, in percent.

NOTE A major part of the difference between the start and end values can be caused by soot deposits on the lenses of the optical measurement system.

A.4 Exposure period

The specimens are exposed to the flames of the main (primary) burner from $t = t_0 = 300$ s, until the propane supply to the burner is stopped (t'). The exposure period is equal to $t' - t_0$.

Check that the burner has stopped by noting the first moment t' after t_0 at which the propane mass flow is lower than 300 mg/s at t' as well as at the next data point (t'+3 s):

$$[m_{gas}(t'-3) \geq 300 \text{ mg/s}] \wedge [m_{gas}(t') < 300 \text{ mg/s}] \wedge [m_{gas}(t'+3) < 300 \text{ mg/s}] \quad \text{(A.8)}$$

where

$m_{gas}(t')$ is the propane mass flow rate, in milligrams per second.

Criterion: $t' - t_0 \geq 1\,245$ s

A.5 Heat output

A.5.1 Calculation of heat release rate (*HRR*)

A.5.1.1 Total *HRR* of specimen and burner: HRR_{total}

a) Calculation of the volume flow of exhaust system, normalized at 298 K, $V_{298}(t)$:

$$V_{298}(t) = cA\frac{k_t}{k_\rho}\sqrt{\frac{\Delta p(t)}{T_{ms}(t)}} \quad \text{(A.9)}$$

where

$V_{298}(t)$ is the volume flow of exhaust system, normalized at 298 K, in cubic metres per second;

c $= (2T_0/\rho_0)^{0,5} = 22{,}4$ [$K^{0,5} \cdot m^{1,5} \cdot kg^{-0,5}$]

A is the area of the exhaust duct at the general measurement section, in square metres;

k_t is the flow profile factor, determined in accordance with C.2.4;

k_ρ is the Reynolds number correction for the hemispherical probe, taken as 1,24;

$\Delta p(t)$ is the pressure difference, in pascals;

$T_{ms}(t)$ is the temperature in general measurement section, in kelvins.

Documents
Document Sharing Hub
Full document details: BS EN 13823:2020+A1:2022

b) Calculation of the oxygen depletion factor:

$$\phi(t) = \frac{\left[\bar{x}O_2(30\,\text{s}...90\,\text{s})\left(1 - xCO_2(t)\right)\right] - \left[xO_2(t)\left(1 - \bar{x}CO_2\left(30\text{ s}...90\text{ s}\right)\right)\right]}{\bar{x}O_2(30\,\text{s}...90\,\text{s})\left(1 - xO_2(t) - xCO_2(t)\right)} \quad \text{(A.10)}$$

where

$\phi(t)$	is the oxygen depletion factor
$xO_2(t)$	is the oxygen concentration in mole fraction
$xCO_2(t)$	is the carbon dioxide concentration in mole fraction
$\bar{x}O_2\left(30\text{ s}...90\text{ s}\right)$	is the average oxygen concentration in mole fraction measured between 30 and 90 s after the start of the test
$\bar{x}CO_2\left(30\text{ s}...90\text{ s}\right)$	is the average carbon dioxide concentration in mole fraction measured between 30 and 90 s after the start of the test

c) Calculation of x_{a_O2}:

$$x_{a_O2} = \bar{x}O_2(30\,\text{s}...90\,\text{s})\left[1 - \frac{H}{100p}\exp\left\{23,2 - \frac{3\ 816}{\bar{T}_{ms}(30\,\text{s}...90\,\text{s}) - 46}\right\}\right] \quad \text{(A.11)}$$

where

x_{a_O2}	is the ambient mole fraction of oxygen including water vapour;
$xO_2(t)$	is the oxygen concentration in mole fraction;
H	is the relative humidity, in percent;
p	is the ambient pressure, in pascals;
$T_{ms}(t)$	is the temperature in the general measurement section, in kelvins.

d) Calculation of $HRR_{total}(t)$:

$$HRR_{total}(t) = EV_{298}(t)x_{a_O2}\left(\frac{\phi(t)}{1 + 0,105\phi(t)}\right) \quad \text{(A.12)}$$

where

$HRR_{total}(t)$	is the total heat release rate of the specimen and burner, in kilowatts;
E	is the heat release per unit volume of oxygen consumed at 298 K, = 17 200 (in kilojoules per cubic metre);
$V_{298}(t)$	is the volume flow of the exhaust system, normalized at 298 K, in cubic metres per second;
x_{a_O2}	is the ambient mole fraction of the oxygen including water vapour;
$\phi(t)$	is the oxygen depletion factor.

Documents
Document Sharing Hub
Full document details: BS EN 13823:2020+A1:2022