BS EN 14037-2:2016

BSI Standards Publication

Free hanging heating and cooling surfaces for water with a temperature below 120°C

Part 2: Pre-fabricated ceiling mounted radiant panels for space heating — Test method for thermal output

Documents
Document Sharing Hub

Full document details: BS EN 14037-2:2016

National foreword

This British Standard is the UK implementation of EN 14037-2:2016. It supersedes BS EN 14037-2:2003 which is withdrawn.

The UK participation in its preparation was entrusted to Technical Committee RHE/6, Air or space heaters or coolers without combustion.

A list of organizations represented on this committee can be obtained on request to its secretary.

This publication does not purport to include all the necessary provisions of a contract. Users are responsible for its correct application.

© The British Standards Institution 2016.
Published by BSI Standards Limited 2016

ISBN 978 0 580 90458 5

ICS 91.140.10

Compliance with a British Standard cannot confer immunity from legal obligations.

This British Standard was published under the authority of the Standards Policy and Strategy Committee on 30 September 2016.

Amendments/corrigenda issued since publication

Date	Text affected

Documents
Document Sharing Hub

Full document details: BS EN 14037-2:2016

EUROPEAN STANDARD

NORME EUROPÉENNE

EUROPÄISCHE NORM

EN 14037-2

September 2016

ICS 91.140.10

Supersedes EN 14037-2:2003

English Version

Free hanging heating and cooling surfaces for water with a temperature below 120°C - Part 2: Pre-fabricated ceiling mounted radiant panels for space heating - Test method for thermal output

Panneaux rayonnants de chauffage et de rafraîchissement alimentés avec une eau à une température inférieure à 120 °C - Partie 2 : Méthode d'essai pour la détermination de la puissance thermique des panneaux rayonnants de plafond préfabriqués destinés au chauffage des locaux

An der Decke frei abgehängte Heiz- und Kühlflächen für Wasser mit einer Temperatur unter 120 °C - Teil 2: Vorgefertigte Deckenstrahlplatten zur Raumheizung - Prüfverfahren für die Wärmeleistung

This European Standard was approved by CEN on 19 March 2016.

CEN members are bound to comply with the CEN/CENELEC Internal Regulations which stipulate the conditions for giving this European Standard the status of a national standard without any alteration. Up-to-date lists and bibliographical references concerning such national standards may be obtained on application to the CEN-CENELEC Management Centre or to any CEN member.

This European Standard exists in three official versions (English, French, German). A version in any other language made by translation under the responsibility of a CEN member into its own language and notified to the CEN-CENELEC Management Centre has the same status as the official versions.

CEN members are the national standards bodies of Austria, Belgium, Bulgaria, Croatia, Cyprus, Czech Republic, Denmark, Estonia, Finland, Former Yugoslav Republic of Macedonia, France, Germany, Greece, Hungary, Iceland, Ireland, Italy, Latvia, Lithuania, Luxembourg, Malta, Netherlands, Norway, Poland, Portugal, Romania, Slovakia, Slovenia, Spain, Sweden, Switzerland, Turkey and United Kingdom.

EUROPEAN COMMITTEE FOR STANDARDIZATION
COMITÉ EUROPÉEN DE NORMALISATION
EUROPÄISCHES KOMITEE FÜR NORMUNG

CEN-CENELEC Management Centre: Avenue Marnix 17, B-1000 Brussels

© 2016 CEN All rights of exploitation in any form and by any means reserved worldwide for CEN national Members.

Ref. No. EN 14037-2:2016 E

Documents
Document Sharing Hub

Full document details: BS EN 14037-2:2016

Contents

Page

European foreword ... 4
Introduction ... 5
1 Scope ... 6
2 Normative references ... 6
3 Terms and definitions ... 6
4 Testing of thermal output ... 6
5 Test booth ... 6
5.1 General ... 6
5.2 Dimensions of the test booth ... 7
5.3 Emissivity of the inside surrounding surfaces ... 8
5.4 Tightness of the test booth ... 8
5.5 Cooling system ... 8
5.6 Temperature measuring points ... 8
5.6.1 Reference room temperature ... 8
5.6.2 Air temperature ... 9
5.6.3 Surface temperature of the inside surfaces ... 10
6 Master Panels ... 11
6.1 Introduction ... 11
6.2 General ... 11
6.3 Determination of the value $\Phi_{M,s}$ of master panels (Primary set) ... 11
6.4 Construction details ... 11
6.4.1 Dimensions ... 11
6.4.2 Material ... 11
6.4.3 Construction ... 11
6.4.4 Dimensional verification ... 11
6.5 Verification of test installation, repeatability and reproducibility ... 17
7 Test methods ... 17
7.1 General ... 17
7.2 Weighing method ... 18
7.3 Measurement of the inlet and outlet temperatures ... 19
7.4 Measurement of the control temperatures ... 19
7.5 Uncertainty of the measured thermal output ... 19
7.6 Air pressure ... 19
8 Carrying out the measurement ... 20
8.1 General ... 20
8.2 Dimensions and construction of the test samples ... 20
8.3 Selection of the models to be tested for determining the thermal output of a type ... 20
8.4 Manufacturer documents for the test samples ... 20
8.5 Arrangement of the sample in the test booth ... 20
8.6 Upper insulation of the test sample ... 22
8.7 Connection of the test sample to the measuring circuit ... 22
8.8 Tests ... 22
8.9 Mass flow ... 23
8.10 Test temperatures ... 23

AVA Documents
Document Sharing Hub
Full document details: BS EN 14037-2:2016

8.11 Steady-state conditions 23
8.12 Correction due to the air pressure 23
8.13 Result of measurement – Characteristic equation 23

9 Test report 24
9.1 General 24
9.2 Data 24

Annex A (normative) Dimensional verification of master panels 26

A.1 General 26

A.2 Determination $\Phi_{M,s}$ -values of the master panels (primary set) 26

A.3 Dimensional verification and manufacturing certification for master panel 1 26

A.4 Dimensional verification and manufacturing certification for master panel 2 28

Annex B (informative) Temperature measuring device 31

Annex C (normative) Least squares regression for a model 32

Annex D (informative) Specimen of the test report for heating capacity 33

Bibliography 36

Documents
Document Sharing Hub
Full document details: BS EN 14037-2:2016

European foreword

This document (EN 14037-2:2016) has been prepared by Technical Committee CEN/TC 130 “Space heating appliances without integral heat sources”, the secretariat of which is held by UNI.

This document supersedes EN 14037-2:2003.

This European Standard shall be given the status of a national standard, either by publication of an identical text or by endorsement, at the latest by March 2017, and conflicting national standards shall be withdrawn at the latest by March 2017.

Attention is drawn to the possibility that some of the elements of this document may be the subject of patent rights. CEN [and/or CENELEC] shall not be held responsible for identifying any or all such patent rights.

The main changes are:

— the title has been changed,

— the introduction has been changed,

— the scope has been changed,

— a new Master panel 2 has been added,

— Clause 9 “Test Report” has been reworked.

The European Standard EN 14037, *Free hanging heating and cooling surfaces for water with a temperature below 120°C*, consists of the following parts:

— *Part 1: Pre-fabricated ceiling mounted radiant panels for space heating - Technical specifications and requirements;*

— *Part 2: Pre-fabricated ceiling mounted radiant panels for space heating - Test method for thermal output;*

— *Part 3: Pre-fabricated ceiling mounted radiant panels for space heating - Rating method and evaluation of radiant thermal output;*

— *Part 4: Pre-fabricated ceiling mounted radiant panels for space heating - Test method for cooling capacity;*

— *Part 5: Open or closed heated ceiling surfaces - Test method for thermal output.*

According to the CEN/CENELEC Internal Regulations, the national standards organisations of the following countries are bound to implement this European Standard: Austria, Belgium, Bulgaria, Croatia, Cyprus, Czech Republic, Denmark, Estonia, Finland, Former Yugoslav Republic of Macedonia, France, Germany, Greece, Hungary, Iceland, Ireland, Italy, Latvia, Lithuania, Luxembourg, Malta, Netherlands, Norway, Poland, Portugal, Romania, Slovakia, Slovenia, Spain, Sweden, Switzerland, Turkey and the United Kingdom.

Documents
Document Sharing Hub
Full document details: BS EN 14037-2:2016

Introduction

This European Standard results from the recognition, that heated and chilled ceiling radiant panels falling into the field of application hereinafter stated are traded on the basis of their thermal output. For evaluating and comparing different heated and chilled ceiling surfaces it is therefore necessary to refer to a heating stipulated value.

As installations with ceiling mounted radiant panels can also be used in practice for space cooling, it is necessary to have a test method for evaluating the cooling capacity. Installations with different free hanging heating and cooling surfaces need, for the use of space heating a test method for evaluating the heating output. The test method differs from the method for ceiling mounted radiant panels.

Documents
Document Sharing Hub
Full document details: BS EN 14037-2:2016

1 Scope

This European Standard describes the test method and the test installation for determining the thermal output of pre-fabricated ceiling mounted radiant panels according to the specifications of EN 14037-1:2016, 3.3.1.

2 Normative references

The following documents, in whole or in part, are normatively referenced in this document and are indispensable for its application. For dated references, only the edition cited applies. For undated references, the latest edition of the referenced document (including any amendments) applies.

EN 14037-1:2016, *Prefabricated ceiling mounted radiant panels for space heating - Technical specifications and requirements*

EN 14037-3:2016, *Prefabricated ceiling mounted radiant panels for space heating - Rating method and evaluation of radiant thermal output*

EN ISO/IEC 17025:2005, *General requirements for the competence of testing and calibration laboratories (ISO/IEC 17025:2005)*

3 Terms and definitions

For the purposes of this document, the terms and definitions given in EN 14037-1:2016 apply.

4 Testing of thermal output

The test is carried out in a testing system, which consists of a closed booth with controlled temperatures of the inside surfaces plus a set of two master panels built according to Clause 6.

The method for measuring the thermal output consists of the measurement of mass flow and enthalpy difference between inlet and outlet (by weighing method). Other measurement methods shall guarantee in minimum the precision obtained by weighing method.

All laboratories that make tests according this standard have to make comparable measurements with the other laboratories (according to Clause 6 of this standard).

5 Test booth

5.1 General

The booth for testing ceiling mounted radiant panels shall be constructed in a way that all six surrounding surfaces can be chilled.

Figure 1 shows the schematic lay-out of a test booth with a six-wall cooling. The walls are defined as follows:

— Wall 1: the wall parallel to the inlet header;

— Wall 2: the wall to the right of wall 1;

— Wall 3: the wall opposite of wall 1;

— Wall 4: the wall to the left of wall 1;

Documents
Document Sharing Hub
Full document details: BS EN 14037-2:2016

— Wall 5: the floor;

— Wall 6: the ceiling.

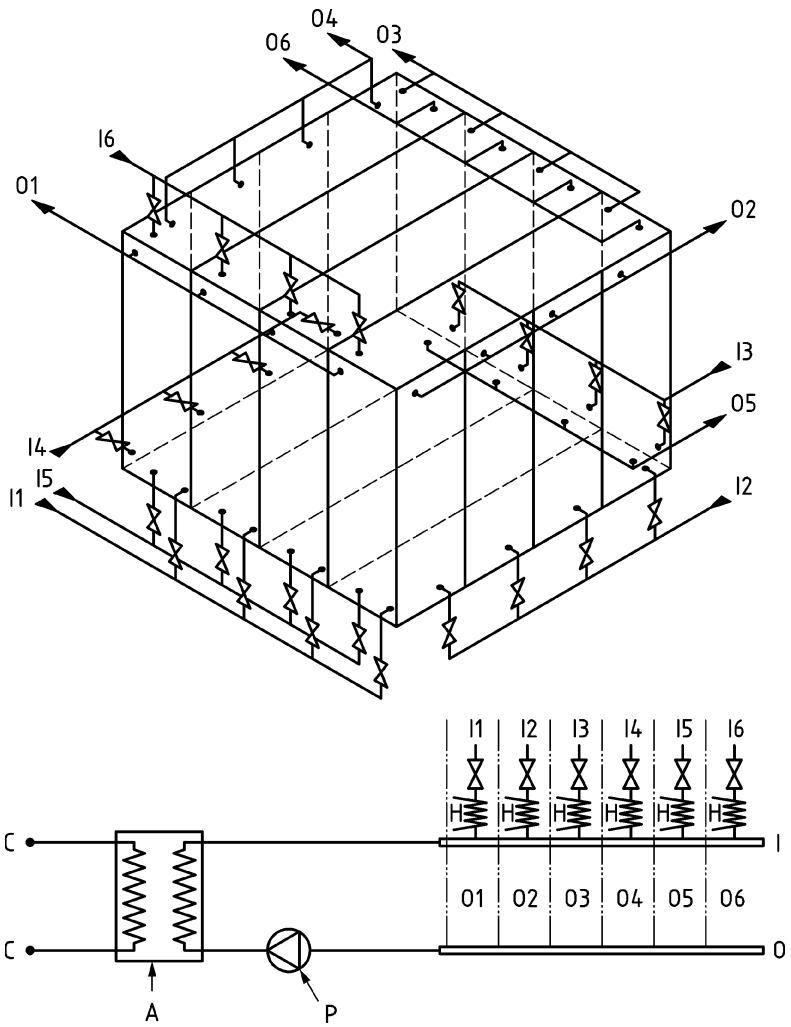

Key

C	cooling circuit connection
I	inlet cooling water
O	outlet cooling water
A	cooling water accumulator
P	circulating pump
H	after heater
1....6	designation of the surrounding inside surfaces

Figure 1 — Example of the hydraulic system of a test booth

5.2 Dimensions of the test booth

The test booth has to have the following inside dimensions:

— Length: (4 ± 0,02) m;

— Width: (4 ± 0,02) m;

Documents
Document Sharing Hub
Full document details: BS EN 14037-2:2016

— Height: (3 ± 0,02) m.

5.3 Emissivity of the inside surrounding surfaces

Walls, ceiling and floor shall have smooth inside surfaces covered with a coat of mat paint having a degree of emissivity of minimum 0,9.

5.4 Tightness of the test booth

The test booth construction shall be sufficiently tight to prevent air infiltration.

5.5 Cooling system

The cooling system is to be carried out in order, that the difference between the 6 chilled surrounding inside surfaces of the test booth and the average temperature of all 6 surfaces is not higher than 0,5 K. The temperature difference between inlet and outlet shall not be higher than 0,5 K. That condition shall be maintained at the tests for the determination of the characteristic equation.

5.6 Temperature measuring points

5.6.1 Reference room temperature

The reference room temperature is measured at a height of 0,75 m above the floor of the test booth by means of a globe thermometer (see Figure 2). The measuring point is situated on the vertical axis through the central point of the ceiling mounted radiant panel.

Dimensions in millimetres

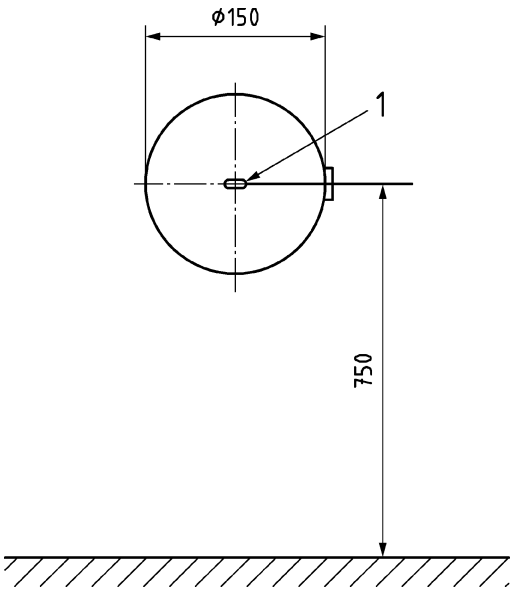

Key

1 temperature measuring point

Figure 2 — Globe thermometer

Temperature sensor with blackened light metal sphere (diameter 150 mm, emissivity 0,9). The measuring point is arranged in the centre of the sphere. The penetration of the temperature sensor through the surface of the sphere runs horizontally and is air tight. The hollow sphere is attached to the temperature sensor.

Documents
Document Sharing Hub
Full document details: BS EN 14037-2:2016

5.6.2 Air temperature

The air temperature is measured with sensors protected against radiation (see Figure 3).

The measuring points are situated on 2 vertical axes at 3 different heights as shown in Figure 4.

Dimensions in millimetres

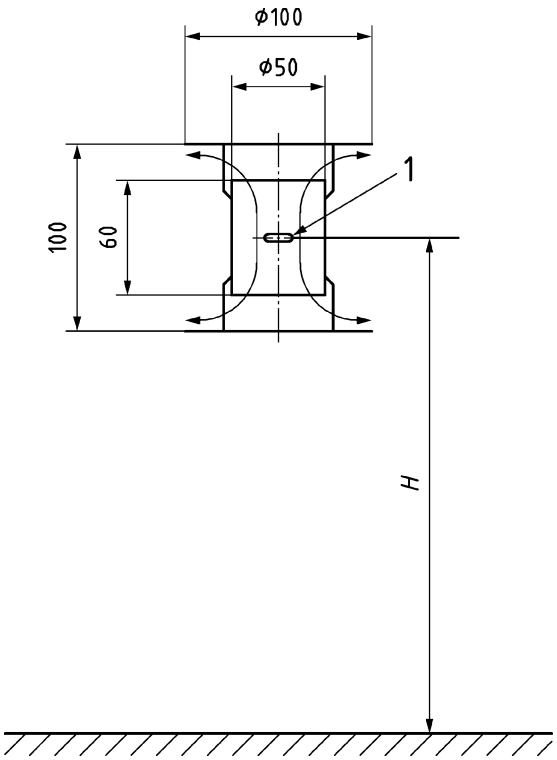

Key

1 temperature measuring point

H height of the measuring point

Figure 3 — Example of a measuring point protected against radiation

Documents
Document Sharing Hub
Full document details: BS EN 14037-2:2016

Dimensions in meter

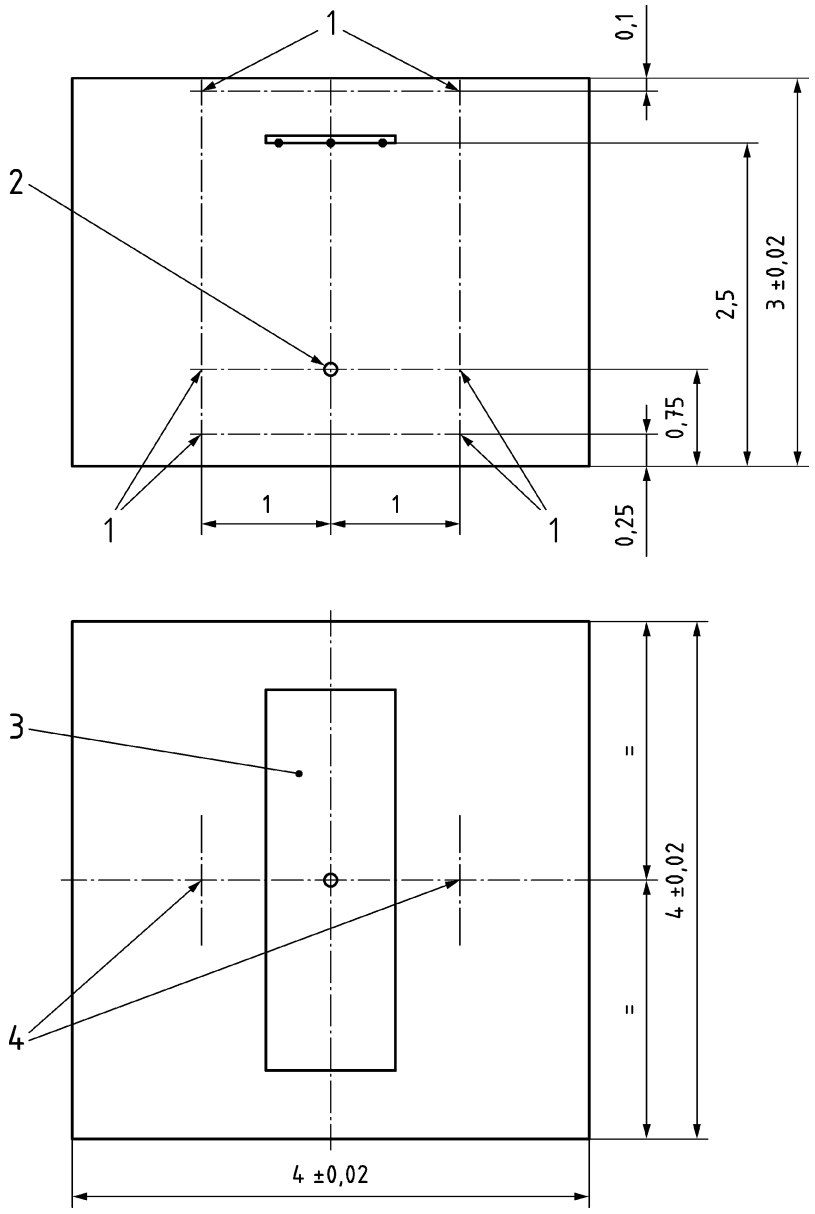

Key

1 air temperature measuring points

2 reference room temperature measuring point

3 ceiling mounted radiant panel

4 axes of air temperature measuring points

Figure 4 — Arrangement of measuring points for the reference room temperature and for air temperature

5.6.3 Surface temperature of the inside surfaces

The surface temperatures of the inside walls is calculated as average value of the inlet and outlet water temperature of each single surface wall.

Documents
Document Sharing Hub
Full document details: BS EN 14037-2:2016