BS EN 14127:2011

BSI Standards Publication

Non-destructive testing — Ultrasonic thickness measurement

bsi.

...making excellence a habit.™

Document Sharing Hub

Full document details: BS EN 14127:2011

National foreword

This British Standard is the UK implementation of EN 14127:2011. It supersedes BS EN 14127:2004 which is withdrawn.

The UK participation in its preparation was entrusted to Technical Committee WEE/46, Non-destructive testing.

A list of organizations represented on this committee can be obtained on request to its secretary.

This publication does not purport to include all the necessary provisions of a contract. Users are responsible for its correct application.

© BSI 2011

ISBN 978 0 580 71098 8

ICS 19.100

Compliance with a British Standard cannot confer immunity from legal obligations.

This British Standard was published under the authority of the Standards Policy and Strategy Committee on 31 March 2011.

Amendments issued since publication

Date	Text affected

Documents
Document Sharing Hub

Full document details: BS EN 14127:2011

EUROPEAN STANDARD

NORME EUROPÉENNE

EUROPÄISCHE NORM

EN 14127

February 2011

ICS 19.100

Supersedes EN 14127:2004

English Version

Non-destructive testing - Ultrasonic thickness measurement

Essais non destructifs - Mesurage de l'épaisseur par ultrasons

Zerstörungsfreie Prüfung - Dickenmessung mit Ultraschall

This European Standard was approved by CEN on 25 December 2010.

CEN members are bound to comply with the CEN/CENELEC Internal Regulations which stipulate the conditions for giving this European Standard the status of a national standard without any alteration. Up-to-date lists and bibliographical references concerning such national standards may be obtained on application to the CEN-CENELEC Management Centre or to any CEN member.

This European Standard exists in three official versions (English, French, German). A version in any other language made by translation under the responsibility of a CEN member into its own language and notified to the CEN-CENELEC Management Centre has the same status as the official versions.

CEN members are the national standards bodies of Austria, Belgium, Bulgaria, Croatia, Cyprus, Czech Republic, Denmark, Estonia, Finland, France, Germany, Greece, Hungary, Iceland, Ireland, Italy, Latvia, Lithuania, Luxembourg, Malta, Netherlands, Norway, Poland, Portugal, Romania, Slovakia, Slovenia, Spain, Sweden, Switzerland and United Kingdom.

EUROPEAN COMMITTEE FOR STANDARDIZATION
COMITÉ EUROPÉEN DE NORMALISATION
EUROPÄISCHES KOMITEE FÜR NORMUNG

Management Centre: Avenue Marnix 17, B-1000 Brussels

© 2011 CEN All rights of exploitation in any form and by any means reserved worldwide for CEN national Members.

Ref. No. EN 14127:2011: E

Documents
Document Sharing Hub

Full document details: BS EN 14127:2011

Contents

Page

Foreword 4
1 Scope 5
2 Normative references 5
3 Terms and definitions 5
4 Measurement modes 5
5 General requirements 7
5.1 Instruments 7
5.2 Probes 7
5.3 Couplant 7
5.4 Reference blocks 7
5.5 Test objects 7
5.6 Qualification of personnel 8
6 Application of the technique 8
6.1 Surface conditions and surface preparation 8
6.2 Technique 8
6.2.1 General 8
6.2.2 Measurement during manufacture 9
6.2.3 In-service measurement of residual wall thickness 9
6.3 Selection of probe 9
6.4 Selection of instrument 10
6.5 Materials different from the reference 10
6.6 Special measuring conditions 10
6.6.1 General 10
6.6.2 Measurements at temperatures below 0 °C 11
6.6.3 Measurements at elevated temperatures 11
6.6.4 Hazardous atmospheres 11
7 Instrument setting 11
7.1 General 11
7.2 Methods 12
7.2.1 General 12
7.2.2 Digital thickness instruments 12
7.2.3 A-scan Instruments 12
7.3 Check of settings 13
8 Influence on accuracy 14
8.1 Operational conditions 14
8.1.1 Surface conditions 14
8.1.2 Surface temperature 14
8.1.3 Metallic coating 15
8.1.4 Non-metallic coating 15
8.1.5 Geometry 16
8.2 Equipment 17
8.2.1 Resolution 17
8.2.2 Range 17
8.3 Evaluation of accuracy 18
8.3.1 General 18
8.3.2 Influencing parameters 18
8.3.3 Method of calculation 18

Documents
Document Sharing Hub

Full document details: BS EN 14127:2011

9 Influence of materials 18
9.1 General 18
9.2 Inhomogeneity 18
9.3 Anisotropy 18
9.4 Attenuation 18
9.5 Surface conditions 18
9.5.1 General 18
9.5.2 Contact surface 19
9.5.3 Reflecting surface 19
9.5.4 Corrosion and erosion 20

10 Test report 20
10.1 General 20
10.2 General information 20
10.3 Inspection data 21

Annex A (informative) **Corrosion in vessels and piping** 22
A.1 General 22
A.2 Measurement of general corrosion 22
A.2.1 Instrument 22
A.2.2 Probes 22
A.2.3 Setting of the instrument 22
A.2.4 Measuring 23
A.3 Measurement of corrosion with pitting 23
A.3.1 Instrument 23
A.3.2 Probes 23
A.3.3 Setting of the instrument 23
A.3.4 Measuring 23

Annex B (informative) **Instrument settings** 29

Annex C (informative) **Parameters influencing accuracy** 31
C.1 Parameters influencing accuracy 31
C.2 Methods of calculation 33

Annex D (informative) **Measuring technique selection** 36

Bibliography 40

Documents
Document Sharing Hub
Full document details: BS EN 14127:2011

Foreword

This document (EN 14127:2011) has been prepared by Technical Committee CEN/TC 138 “Non-destructive testing”, the secretariat of which is held by AFNOR.

This European Standard shall be given the status of a national standard, either by publication of an identical text or by endorsement, at the latest by August 2011, and conflicting national standards shall be withdrawn at the latest by August 2011.

Attention is drawn to the possibility that some of the elements of this document may be the subject of patent rights. CEN [and/or CENELEC] shall not be held responsible for identifying any or all such patent rights.

This document supersedes EN 14127:2004, which has been editorially revised, in order to take into account the new edition of EN 1330-4:2010.

According to the CEN/CENELEC Internal Regulations, the national standards organizations of the following countries are bound to implement this European Standard: Austria, Belgium, Bulgaria, Croatia, Cyprus, Czech Republic, Denmark, Estonia, Finland, France, Germany, Greece, Hungary, Iceland, Ireland, Italy, Latvia, Lithuania, Luxembourg, Malta, Netherlands, Norway, Poland, Portugal, Romania, Slovakia, Slovenia, Spain, Sweden, Switzerland and the United Kingdom.

Documents
Document Sharing Hub

Full document details: BS EN 14127:2011

1 Scope

This European Standard specifies the principles for ultrasonic thickness measurement of metallic and non-metallic materials by direct contact, based on measurement of time-of-flight of ultrasonic pulses only.

2 Normative references

The following referenced documents are indispensable for the application of this document. For dated references, only the edition cited applies. For undated references, the latest edition of the referenced document (including any amendments) applies.

EN 583-2, *Non-destructive testing — Ultrasonic examination — Part 2: Sensitivity and range setting*

EN 1330-4:2010, *Non-destructive testing — Terminology — Part 4: Terms used in ultrasonic testing*

3 Terms and definitions

For the purposes of this document, the terms and definitions given in EN 1330-4:2010 apply.

4 Measurement modes

The thickness of a part or structure is determined by accurately measuring the time required for a short ultrasonic pulse generated by a transducer to travel through the thickness of the material once, twice or several times.

The material thickness is calculated by multiplying the known sound velocity of the material with the transit time and dividing by the number of times the pulse transits the material wall.

This principle can be accomplished by applying one of the following modes, see Figure 1:

a) Mode 1: Measure the transit time from an initial excitation pulse to a first returning echo, minus a zero correction to account for the thickness of the transducer wear surface and the couplant layer (single echo mode).

b) Mode 2: Measure the transit time from the end of a delay line to the first backwall echo (single echo delay line mode).

c) Mode 3: Measure the transit time between back-wall echoes (multiple echoes).

d) Mode 4: Measure the transit time for a pulse travelling from the transmitter to a receiver in contact with the back-wall (through transmission mode).

Documents
Document Sharing Hub
Full document details: BS EN 14127:2011

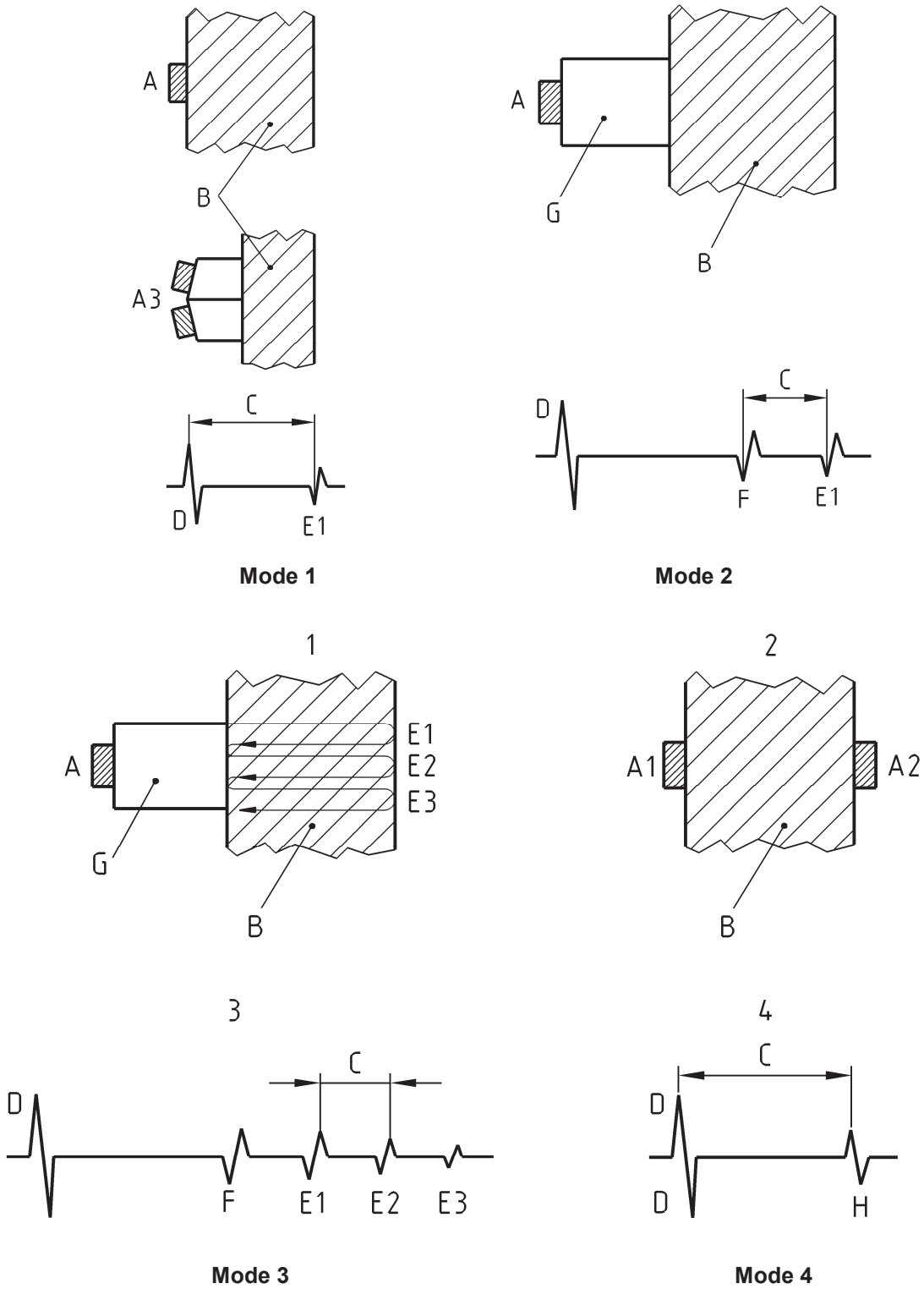

Key

A	transmit/receive probe
A1	transmit probe
A2	receive probe
A3	dual element probe
B	test object
C	sound path travel time
D	transmission pulse indication
E1 to E3	back-wall echoes
F	interface echo
G	delay path
H	received pulse

Figure 1 — Measurement modes

Documents
Document Sharing Hub
Full document details: BS EN 14127:2011

5 General requirements

5.1 Instruments

Thickness measurement can be achieved by using the following types of instruments:

a) dedicated ultrasonic thickness measurement instruments with numerical display showing the measured value;

b) dedicated ultrasonic thickness measurement instruments with numerical display showing the measured value and A-scan presentation (waveform display);

c) instruments designed primarily for detection of discontinuities with A-scan presentation of signals. This type of instrument may also include numerical display of thickness values.

See 6.4.

5.2 Probes

The following types of probes are used, these are generally longitudinal wave probes:

— dual element probes;

— single transducer probes.

See 6.3.

5.3 Couplant

Acoustic contact between probe (probes) and material has to be provided, normally by application of a fluid or gel.

The couplant shall not have any adverse effect on the test object, the equipment or represent a health hazard to the operator.

For couplant to be used in special measuring conditions see 6.6.

The coupling medium should be chosen to suit the surface conditions and the irregularities of the surface to ensure adequate coupling.

5.4 Reference blocks

The measuring system shall be calibrated on one or more samples or reference blocks representative of the object to be measured, i.e. having comparable dimensions, material and structure. The thickness of the blocks or the steps should cover the range of thickness to be measured. Either the thickness or the sound velocity of the reference blocks shall be known.

5.5 Test objects

The object to be measured shall allow for ultrasonic wave propagation.

There shall be free access to each individual area to be measured.

The surface of the area to be measured shall be free of all dirt, grease, lint, scale, welding flux and spatter, oil or other extraneous matter that could interfere with the examination.

If the surface is coated, the coating shall have good adhesion to the material. Otherwise it shall be removed.

When measuring through coating its thickness and sound velocity need to be known unless mode 3 is used.

AVA Documents
Document Sharing Hub

Full document details: BS EN 14127:2011

For further details, see Clause 8.

5.6 Qualification of personnel

An operator performing ultrasonic thickness measurement according to this document shall have a basic knowledge of the physics of ultrasonics, and a detailed understanding and training related to ultrasonic thickness measurements. In addition, the operator shall have knowledge of the product and material to be measured.

It is assumed that ultrasonic thickness testing is performed by qualified and capable personnel. In order to prove this qualification, it is recommended to certify the personnel in accordance with EN 473 or equivalent.

Note that for pressure equipment in categories III and IV according to Directive 97/23/EC, Annex I, 3.1.3: the personnel must be approved by a third-party organization recognized by a Member State.

6 Application of the technique

6.1 Surface conditions and surface preparation

Using the pulse-echo method means that the ultrasonic pulse has to pass the contact surface between test object and the probe at least twice: when entering the object and when leaving it.

Therefore a clean and even contact area with at least two times the probe's diameter is preferred. Poor contact will result in loss of energy, distortion of signal and sound path.

To enable sound propagation all loose parts and non adherent coatings shall be removed by brushing or grinding.

Attached layers, like colour coating, plating, enamels, may stay on the object, but only a few thickness meters are able to exclude these layers from being measured.

Very often thickness measurements have to be done on corroded surfaces, e.g. storage tanks and pipelines. To increase measuring accuracy the contact surface should be ground within an area at least two times the probe's diameter. This area should be clean from corrosion products.

6.2 Technique

6.2.1 General

The task of ultrasonic thickness measurements can be separated into two application areas:

— measurement during manufacture;

— in-service measurements of residual wall thickness.

Each area has its own special conditions which require special measuring techniques.

With a knowledge of the material, geometry and thickness to be measured and the required accuracy the most suitable measuring equipment and mode can be selected. Annex D gives further guidance:

a) depending on the thickness and the material, frequencies from 100 kHz with through transmission on highly attenuative materials up to 50 MHz on thin metal sheets shall be used;

b) if dual element probes are used then compensation for V-path error is required;

c) on curved objects the diameter of the probe contact area shall be significantly smaller than the diameter of the test object;

Documents
Document Sharing Hub

Full document details: BS EN 14127:2011

d) the accuracy of the thickness measurement depends on how accurate the time-of-flight can be measured, depending on the mode of time-measuring (zero crossing, flank-to-flank, peak-to-peak), depending on the mode chosen (with multiple echoes, mode 3, the accuracy is higher than with modes 1 and 2), depending on the frequencies which can be used (higher frequencies provide higher accuracy than lower frequencies because of the more accurate time measurement);

e) ultrasonic thickness measurement is often required over an area of the component to be measured. Where this is the case consideration should be given to the spacing between each measurement. Such spacing should be even and the use of a grid is recommended. The grid size should be selected to give a balance between the confidence in the results and the work content involved.

Measuring the thickness ultrasonically means measuring the time-of-flight and then calculating the thickness assuming a constant sound velocity (see Clause 7). If the velocity is not constant within the path the ultrasonic pulse has travelled the accuracy of the measurement will be severely affected.

6.2.2 Measurement during manufacture

6.2.2.1 Modes 1, 2 and 3

Where the pulse echo mode is used, the flow charts in Figures D.1 and D.2 give guidance on the selection of the best method and equipment.

Thickness measurement on clean parallel surfaces may be carried out with simple numerical display thickness instruments.

On composite materials which generate echoes in addition to the back-wall echo, it is recommended that thickness instruments with A-scan displays (type 5.1 b) or 5.1 c)) are used to select the correct echo of the thickness measurement.

6.2.2.2 Mode 4

If the material is highly attenuative and large thicknesses have to be measured, no echo technique can be used, i.e. only through transmission (mode 4) is applicable.

Two probes on opposite sides of the test object have to be used. The instrument therefore shall allow for operation with separate transmitter and receiver (TR mode). In most cases the frequency shall be lower than 1 MHz. Special low frequency instruments from group c) in 5.1 with low frequency probes shall be used.

6.2.3 In-service measurement of residual wall thickness

During in-service inspection, measurements have to be taken on materials that are subject to corrosion or erosion. The surfaces may be rough and contain pitting or other defects (see Annex A) which are areas of low reflectivity.

For these applications the use of double transducer probes is recommended. The sensitivity shall be set manually to detect the bad reflecting areas.

Where it is necessary to take a lot of measurements, the readings shall be values with the information on the location of the measuring point. Special inspection programs are available to achieve this (data logging).

With in-service inspection the environmental conditions are very important. Equipment may be needed which can withstand high temperatures and harsh environments or has special electrical shielding.

The flow charts in Figures D.3 and D.4 give guidance on in-service thickness measurements.

6.3 Selection of probe

Having chosen a suitable measurement procedure according to 6.2, i.e. a general decision for a probe type (single or dual element) has been made, there are other parameters that need to be considered when matching the probe to the measuring conditions:

Documents
Document Sharing Hub
Full document details: BS EN 14127:2011

Wide band probes offer a shorter pulse than narrow band probes, thus giving a suited flank or peak to start and stop the time-of-flight measurement, giving a better resolution when measuring thin sheets or coatings.

Additionally a wide frequency band always gives a stable echo even when attenuating materials have to be measured.

Probe size and frequency shall be chosen to cover the measurement range by a narrow sound beam to get an echo from a well defined area.

For dual element probes the focal range should cover the expected thickness range.

When measuring small thicknesses a delay path should be used. The measurement should be done with the interface echo (delay path / test object) and the first back-wall echo from the test object (mode 2) or to make the measurement using mode 3. The material of the delay path shall be chosen to generate a suitable interface echo. Using the same material as the test object will not generate an interface echo. When the material of the delay path has a lower acoustic impedance than the material to be tested, e.g. plastics delay on metals, there will be a phase shift of the interface echo. This has to be corrected to get accurate results. Some thickness instruments do this correction automatically.

For small thicknesses it is also possible to use a double transducer probe with small focal distance.

When measuring on hot surfaces, the delay path shall act as a thermal barrier.

The material chosen for delay has to withstand the temperatures of the test object. The influence of the temperature on the acoustical properties of the delay path has to be known (drift of sound attenuation and velocity). Data sheets of the probe manufacturers show the range of temperatures a probe is suitable for and the time it can be used on those temperatures.

6.4 Selection of instrument

Selection of instruments of type 5.1 a), b) or c) is done as follows:

— instruments of type 5.1 c) can be used for modes 1 to 4, see Clause 4, and can satisfy the conditions given in 6.2.2 and 6.2.3;

— instruments of type 5.1 b) can be used for modes 1, 2 and 3 only; see Clause 4, and can satisfy the conditions given in 6.2.2.1 and 6.2.3;

— instruments of type 5.1 a) may be preset by the manufacturer to work only in one of the modes 1, 2 or 3 (see Clause 4).

The instruments shall be selected to satisfy the individual requirements given in 6.2.2.1 or 6.2.3.

See also Annex D.

6.5 Materials different from the reference

See Table B.1.

6.6 Special measuring conditions

6.6.1 General

There shall be strict observation of all legislative procedures governing the safe use of chemicals and electrical equipment.

Where there is a requirement for high accuracy measurements the calibration or reference blocks used should be at the same temperature as the item under test.

Documents
Document Sharing Hub

Full document details: BS EN 14127:2011

6.6.2 Measurements at temperatures below 0 °C

For measurements below 0 °C the couplant chosen shall retain its acoustic characteristics and have a freezing point below the test temperature.

Most probes are rated for use between - 20 °C and + 60 °C, at temperatures below - 20 °C specially designed probes may be required and contact time should be limited as recommended by the manufacturer.

6.6.3 Measurements at elevated temperatures

For measurements above 60 °C a high temperature probe is required and the couplant shall be designed for use at the test temperature.

It is also recommended that when using A-scan equipment it should have a "freeze" mode to allow the operator to assess the signal response. The probe contact time shall be limited to the minimum time necessary to achieve measurement as recommended by the manufacturer.

6.6.4 Hazardous atmospheres

In the measurement of thickness in hazardous atmospheres there shall be strict compliance with prevailing safety regulations and standards.

In explosive atmospheres the probe, cable and equipment combination shall be classified as intrinsically safe and relevant safety certification and or documentation shall be checked and completed prior to use.

In corrosive atmospheres the couplant shall not react adversely with the environment and shall retain its acoustic properties.

7 Instrument setting

7.1 General

All instrument setting shall be carried out with the same equipment as that which will be used for the measurements. Instrument setting shall be carried out in accordance with the manufacturer's instructions or other valid standards or procedures.

It should be noted that this clause covers only the setting of the instrument (in service), the verification of the equipment is not considered, but can be performed according to the design specification.

Ultrasonic instruments do not measure thickness; they measure time-of-flight. The thickness is calculated by the application of a factor which is the sound velocity of the material.

$$d = v \times t / n \qquad (1)$$

where

d is the thickness;

v is the sound velocity;

t is the measured time;

n is the number of transits through the test object (see Figure 1).

AVA Documents
Document Sharing Hub
Full document details: BS EN 14127:2011

7.2 Methods

7.2.1 General

The method for setting of the instrument shall suit the measuring mode and the equipment and probe in use. The setting shall be carried out under comparable operating conditions as those of the measurement instrument.

The tables in Annex B give guidance on the selection of methods for setting instruments.

Differences exist between calibrating a digital thickness instruments (types 5.1 a) and b)) and an A-scan instrument (type 5.1 c)).

7.2.2 Digital thickness instruments

See also 5.1 a) and 5.1 b).

Many digital thickness instruments can be used in measurement modes 1, 2 and 3. The setting of the instrument can be achieved in either of two ways:

— adjust the displayed reading such that it agrees with the measured known dimensions of the series of reference blocks;

— adjust or set the material velocity on the instrument to agree with the known velocity of the test object.

7.2.3 A-scan Instruments

See also 5.1, c).

Reference to EN 583-2 shall be made for information regarding the time base setting of an A-scan instrument.

When using mode 1 with an A-scan instrument the horizontal time base is set such that the transmission pulse indication and the first back-wall echo from the reference block are displayed at convenient positions on the screen to agree with a screen graticule or the digital display.

When using mode 2 with an A-scan instrument adjust the transmission pulse indication such that it is off the screen and the interface echo is at zero on the graticule. Then adjust the first back wall echo to be at the mark relating to the known thickness of the reference block.

When using mode 3 with an A-scan instrument, adjust the first back-wall echo to be at the mark relating to the known thickness of the reference block. Then adjust the nth back-wall echo to be at the mark relating to the n times the known thickness of the reference block. When measuring the test object, the zero point of the graticule will correspond to the surface of the test object. The object thickness is equal to the position of the nth back-wall echo divided by n. n is normally in the range 2 to 10. See Figure 2.

Mode 4 can only be used with an A-scan instrument. The instrument shall be set up to operate in through transmission mode according to the manufacturer's manual. A transmission pulse indication should be available to represent the zero time pulse, set this to align with the zero on the graticule and the received pulse is set to align with a known thickness on the graticule.

Documents
Document Sharing Hub

Full document details: BS EN 14127:2011