BS EN 1417:2014

BSI Standards Publication

Plastics and rubber machines — Two-roll mills — Safety requirements

bsi.

...making excellence a habit.™

Document Sharing Hub

Full document details: BS EN 1417:2014

National foreword

This British Standard is the UK implementation of EN 1417:2014. It supersedes BS EN 1417:1996+A1:2008 which is withdrawn.

The UK participation in its preparation was entrusted to Technical Committee MCE/3/2, Rubber and plastics machine - Safety.

A list of organizations represented on this committee can be obtained on request to its secretary.

This publication does not purport to include all the necessary provisions of a contract. Users are responsible for its correct application.

© The British Standards Institution 2015. Published by BSI Standards Limited 2015

ISBN 978 0 580 77053 1

ICS 83.200

Compliance with a British Standard cannot confer immunity from legal obligations.

This British Standard was published under the authority of the Standards Policy and Strategy Committee on 31 January 2015.

Amendments issued since publication

Date	Text affected

Documents
Document Sharing Hub

Full document details: BS EN 1417:2014

EUROPEAN STANDARD

NORME EUROPÉENNE

EUROPÄISCHE NORM

EN 1417

December 2014

ICS 83.200

Supersedes EN 1417:1996+A1:2008

English Version

Plastics and rubber machines - Two-roll mills - Safety requirements

Machines pour les matières plastiques et le caoutchouc - Mélangeurs à cylindres - Prescriptions de sécurité

Kunststoff- und Gummimaschinen - Walzwerke - Sicherheitsanforderungen

This European Standard was approved by CEN on 7 November 2014.

CEN members are bound to comply with the CEN/CENELEC Internal Regulations which stipulate the conditions for giving this European Standard the status of a national standard without any alteration. Up-to-date lists and bibliographical references concerning such national standards may be obtained on application to the CEN-CENELEC Management Centre or to any CEN member.

This European Standard exists in three official versions (English, French, German). A version in any other language made by translation under the responsibility of a CEN member into its own language and notified to the CEN-CENELEC Management Centre has the same status as the official versions.

CEN members are the national standards bodies of Austria, Belgium, Bulgaria, Croatia, Cyprus, Czech Republic, Denmark, Estonia, Finland, Former Yugoslav Republic of Macedonia, France, Germany, Greece, Hungary, Iceland, Ireland, Italy, Latvia, Lithuania, Luxembourg, Malta, Netherlands, Norway, Poland, Portugal, Romania, Slovakia, Slovenia, Spain, Sweden, Switzerland, Turkey and United Kingdom.

EUROPEAN COMMITTEE FOR STANDARDIZATION
COMITÉ EUROPÉEN DE NORMALISATION
EUROPÄISCHES KOMITEE FÜR NORMUNG

CEN-CENELEC Management Centre: Avenue Marnix 17, B-1000 Brussels

© 2014 CEN All rights of exploitation in any form and by any means reserved worldwide for CEN national Members.

Ref. No. EN 1417:2014 E

Documents
Document Sharing Hub

Full document details: BS EN 1417:2014

Contents

Page

Foreword 4

Introduction 5

1 Scope 6

2 Normative references 6

3 Terms and definitions 7

4 List of significant hazards 10

5 Safety requirements and/or protective measures 13
5.1 General 13
5.1.1 Basic requirements 13
5.1.2 Emergency stop 14
5.2 Mechanical hazards 14
5.2.1 Requirements applicable to all types of two-roll mills 14
5.2.2 Specific requirements applicable to large two-roll mills (D ≥ 400 mm) 15
5.2.3 Specific requirements applicable to small two-roll mills (D ≤ 200 mm) 23
5.2.4 Specific requirements applicable to intermediate two-roll mills (200 mm < D < 400 mm) 26
5.3 Electrical hazards and hazards due to electromagnetic interference 26
5.4 Thermal hazards 26
5.5 Hazards caused by gases, dusts or vapours hazardous to health 27
5.6 Hazards generated by neglecting ergonomic principles 27
5.7 Hazards generated by noise 27
5.7.1 Main noise sources 27
5.7.2 Noise reduction at source by design 27
5.7.3 Noise reduction by devices 27
5.7.4 Information connected with noise hazards 27

6 Verification of the safety requirements and/or protective measures 28

7 Information for use 29
7.1 General 29
7.2 Instruction handbook 29
7.2.1 General 29
7.2.2 Two-roll mills equipped with a trip bar as in 5.2.2.1 30
7.2.3 Two-roll mills equipped with light curtains as in 5.2.3.3.3 30
7.2.4 Noise emission 30
7.3 Marking 31
7.3.1 General 31
7.3.2 Two-roll mills equipped with a trip bar as in 5.2.2.1 31

Annex A (normative) **Positioning of the trip devices specified in 5.2.3.3.2 and 5.2.4** 32

Annex B (normative) **Noise test code** 35
B.1 Introduction 35
B.2 Determination of the A-weighted emission sound pressure level at the workstation 35
B.2.1 Basic standards and measurement procedure 35
B.2.2 Measurement uncertainty 36
B.3 Determination of the A-weighted sound power level 36
B.3.1 Basic standards and measurement procedure 36
B.3.2 Measurement uncertainty 36
B.4 Mounting and operating conditions 37

Documents
Document Sharing Hub
Full document details: BS EN 1417:2014

B.5 Information to be recorded and reported 37
B.5.1 General 37
B.5.2 General data 37
B.5.3 Mounting and operating conditions 37
B.5.4 Standards 38
B.5.5 Noise data 38
B.6 Declaration and verification of noise emission values 38

Annex ZA (informative) **Relationship between this European Standard and the Essential Requirements of EU Directive 2006/42/EC** 39

Bibliography 40

Documents
Document Sharing Hub
Full document details: BS EN 1417:2014

Foreword

This document (EN 1417:2014) has been prepared by Technical Committee CEN/TC 145 “Plastics and rubber machines”, the secretariat of which is held by UNI.

This European Standard shall be given the status of a national standard, either by publication of an identical text or by endorsement, at the latest by June 2015, and conflicting national standards shall be withdrawn at the latest by June 2015.

Attention is drawn to the possibility that some of the elements of this document may be the subject of patent rights. CEN [and/or CENELEC] shall not be held responsible for identifying any or all such patent rights.

This document supersedes EN 1417:1996+A1:2008.

This document has been prepared under a mandate given to CEN by the European Commission and the European Free Trade Association, and supports essential requirements of EU Directive(s).

For relationship with EU Directive(s), see informative Annex ZA, which is an integral part of this document.

Compared with EN 1417:1996+A1:2008, the following significant technical changes have been made:

- a distinction has been made between large, intermediate and small two-roll mills;
- automatic separation has been made mandatory for two-roll mills equipped with a trip bar; however, mill roll reversal can be associated with automatic separation;
- the performance levels of safety related parts of control systems have been specified in accordance with EN ISO 13849-1:2008;
- the simplification of the definition of the stopping angle;
- technical developments in safeguards have been taken into account e.g. light curtains, positioning of interlocking guards;
- the addition of requirements regarding emergency stops;
- the addition of hazards due to electromagnetic interference;
- the addition of a noise test code.

According to the CEN-CENELEC Internal Regulations, the national standards organizations of the following countries are bound to implement this European Standard: Austria, Belgium, Bulgaria, Croatia, Cyprus, Czech Republic, Denmark, Estonia, Finland, Former Yugoslav Republic of Macedonia, France, Germany, Greece, Hungary, Iceland, Ireland, Italy, Latvia, Lithuania, Luxembourg, Malta, Netherlands, Norway, Poland, Portugal, Romania, Slovakia, Slovenia, Spain, Sweden, Switzerland, Turkey and the United Kingdom.

Documents
Document Sharing Hub
Full document details: BS EN 1417:2014

Introduction

This document is a type C standard as stated in EN ISO 12100:2010.

The machinery concerned and the extent to which hazards, hazardous situations and events are covered are indicated in the scope of this document.

When provisions of this type C standard are different from those which are stated in type A or B standards, the provisions of this type C standard take precedence over the provisions of the other standards, for machines that have been designed and built according to the provisions of this type C standard.

Documents
Document Sharing Hub
Full document details: BS EN 1417:2014

1 Scope

This European Standard deals with all significant hazards, hazardous situations and events relevant to two-roll mills for the processing of rubber and/or plastics, when they are used as intended and under conditions of misuse which are reasonably foreseeable by the manufacturer (see Clause 4).

This European Standard covers two-roll mills as defined in 3.1.

This European Standard does not deal with the design of a local exhaust ventilation system that may be necessary in specific applications of the machine not known by the manufacturer.

This European Standard is not applicable to two-roll mills manufactured before the date of its publication as a European Standard.

2 Normative references

The following documents, in whole or in part, are normatively referenced in this document and are indispensable for its application. For dated references, only the edition cited applies. For undated references, the latest edition of the referenced document (including any amendments) applies.

EN 349:1993+A1:2008, *Safety of machinery — Minimum gaps to avoid crushing of parts of the human body*

EN 574:1996+A1:2008, *Safety of machinery — Two-hand control devices — Functional aspects — Principles for design*

EN 953:1997+A1:2009, *Safety of machinery — Guards — General requirements for the design and construction of fixed and movable guards*

EN 60204-1:2006, *Safety of machinery — Electrical equipment of machines — Part 1: General requirements (IEC 60204-1:2005, modified)*

EN 61000-6-2:2005, *Electromagnetic compatibility (EMC) — Part 6-2: Generic standards — Immunity for industrial environments (IEC 61000-6-2:2005)*

EN 61000-6-4:2007, *Electromagnetic compatibility (EMC) — Part 6-4: Generic standards — Emission standard for industrial environments (IEC 61000-6-4:2006)*

EN 61496-1:2013, *Safety of machinery — Electro-sensitive protective equipment — Part 1: General requirements and tests (IEC 61496-1:2012)*

EN 61496-2:2013, *Safety of machinery — Electro-sensitive protective equipment — Part 2: Particular requirements for equipment using active opto-electronic protective devices (AOPDs) (IEC 61496-2:2013)*

EN ISO 3744:2010, *Acoustics — Determination of sound power levels and sound energy levels of noise sources using sound pressure — Engineering methods for an essentially free field over a reflecting plane (ISO 3744:2010)*

EN ISO 3746:2010, *Acoustics — Determination of sound power levels and sound energy levels of noise sources using sound pressure — Survey method using an enveloping measurement surface over a reflecting plane (ISO 3746:2010)*

EN ISO 4413:2010, *Hydraulic fluid power — General rules and safety requirements for systems and their components (ISO 4413:2010)*

Documents
Document Sharing Hub
Full document details: BS EN 1417:2014

EN ISO 4414:2010, *Pneumatic fluid power — General rules and safety requirements for systems and their components (ISO 4414:2010)*

EN ISO 4871:2009, *Acoustics — Declaration and verification of noise emission values of machinery and equipment (ISO 4871:1996)*

EN ISO 9614-2:1996, *Acoustics — Determination of sound power levels of noise sources using sound intensity — Part 2: Measurement by scanning (ISO 9614-2:1996)*

EN ISO 11201:2010, *Acoustics — Noise emitted by machinery and equipment — Determination of emission sound pressure levels at a work station and at other specified positions in an essentially free field over a reflecting plane with negligible environmental corrections (ISO 11201:2010)*

EN ISO 11202:2010, *Acoustics — Noise emitted by machinery and equipment — Determination of emission sound pressure levels at a work station and at other specified positions applying approximate environmental corrections (ISO 11202:2010)*

EN ISO 11204:2010, *Acoustics — Noise emitted by machinery and equipment — Determination of emission sound pressure levels at a work station and at other specified positions applying accurate environmental corrections (ISO 11204:2010)*

EN ISO 12100:2010, *Safety of machinery — General principles for design — Risk assessment and risk reduction (ISO 12100:2010)*

EN ISO 13732-1:2008, *Ergonomics of the thermal environment — Methods for the assessment of human responses to contact with surfaces — Part 1: Hot surfaces (ISO 13732-1:2006)*

EN ISO 13849-1:2008, *Safety of machinery — Safety-related parts of control systems — Part 1: General principles for design (ISO 13849-1:2006)*

EN ISO 13850:2008, *Safety of machinery — Emergency stop — Principles for design (ISO 13850:2006)*

EN ISO 13855:2010, *Safety of machinery — Positioning of safeguards with respect to the approach speeds of parts of the human body (ISO 13855:2010)*

EN ISO 13856-2:2013, *Safety of machinery — Pressure-sensitive protective devices — Part 2: General principles for design and testing of pressure-sensitive edges and pressure-sensitive bars (ISO 13856-2:2013)*

EN ISO 13857:2008, *Safety of machinery — Safety distances to prevent hazard zones being reached by upper and lower limbs (ISO 13857:2008)*

EN ISO 14119:2013, *Safety of machinery — Interlocking devices associated with guards — Principles for design and selection (ISO 14119:2013)*

3 Terms and definitions

For the purposes of this document, the terms and definitions given in EN ISO 12100:2010 and the following apply.

3.1
two-roll mill
machine with two counter-rotating cylinders (known as mill rolls) which are not covered, which may be smooth or grooved, and whose axes are on substantially the same horizontal plane

Note 1 to entry: See Figure 1:

Documents
Document Sharing Hub
Full document details: BS EN 1417:2014

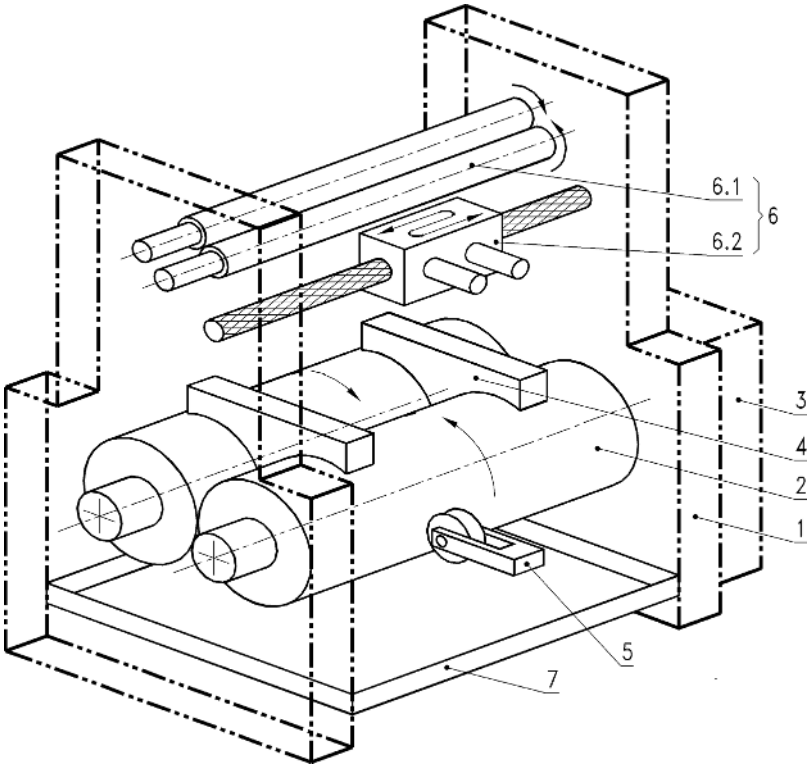

Key

1	frame	6	stock blender
2	mill roll	6.1	stock blender rolls
3	drive and transmission unit	6.2	stock blender carriage
4	stock guide	7	mill tray
5	strip cutting device		

Figure 1 — Principal parts of a two-roll mill

3.1.1
large two-roll mill
two-roll mill with a mill roll diameter $D \geq 400$ mm

3.1.2
small two-roll mill
two-roll mill with a mill roll diameter $D \leq 200$ mm

3.1.3
intermediate two-roll mill
two-roll mill with a mill roll diameter 200 mm < D < 400 mm

Documents
Document Sharing Hub
Full document details: BS EN 1417:2014

3.2
principal crushing zone
zone extending over the full length of the mill rolls indicated by V in Figure 2

Dimensions in mm

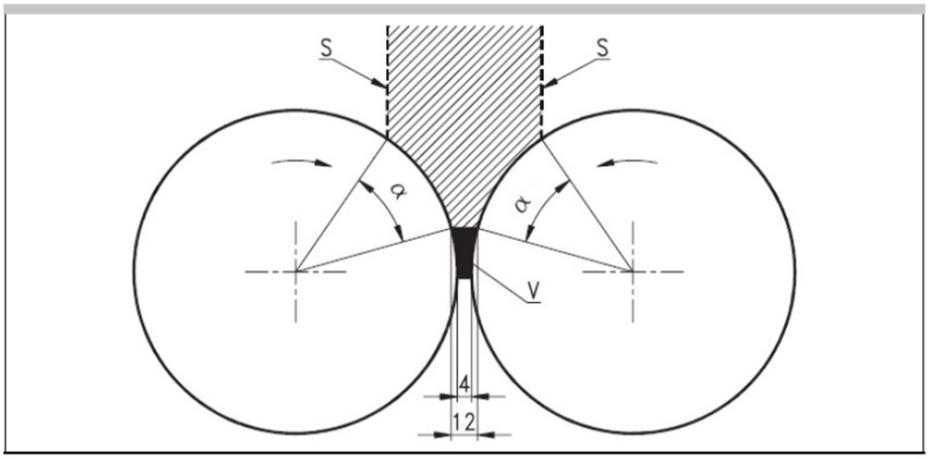

Figure 2 — Principal crushing zone V, safety limits S and stopping angle α

3.3
stopping angle α
angle through which the mill rolls rotate from the stop signal triggered by a protective device until the mill rolls have come to rest with the machine unloaded, and running at maximum rated speed

3.4
safety limit
vertical plane indicated by Line S in Figure 2 demarcating the zone which is unsafe for operators who can reach into it without actuating the trip bar

3.5
stock guide (also known as "ear")
part which prevents material being processed from going beyond the mill roll end

Note 1 to entry: See Figure 1, Location 4.

3.6
strip cutting device
device equipped with rotating discs or stationary blades to cut off strips of processed material from a mill roll

Note 1 to entry: See Figure 1, Location 5.

Documents
Document Sharing Hub
Full document details: BS EN 1417:2014

3.7
stock blender
equipment used to continuously recirculate the material being processed to obtain a uniform mixing, distributing it with a reciprocating motion along the length of the mill rolls

Note 1 to entry: See Figure 1, Location 6.

3.8
mill tray
equipment for catching material which falls under the mill rolls

Note 1 to entry: See Figure 1, Location 7.

3.9
recovery conveyor belt
equipment for recirculating material which falls under the mill rolls

Note 1 to entry: See Figure 5.

3.10
retractable plough
equipment which can be moved towards the mill roll in order to cut and turn over the material, and which can be retracted

Note 1 to entry: See Figure 4.

4 List of significant hazards

This clause contains all the hazards, hazardous situations and events identified by risk assessment as significant for this type of machinery.

Where appropriate, the locations of the hazards listed in Table 1 are shown in Figures 3, 4 and 5.

Documents
Document Sharing Hub
Full document details: BS EN 1417:2014

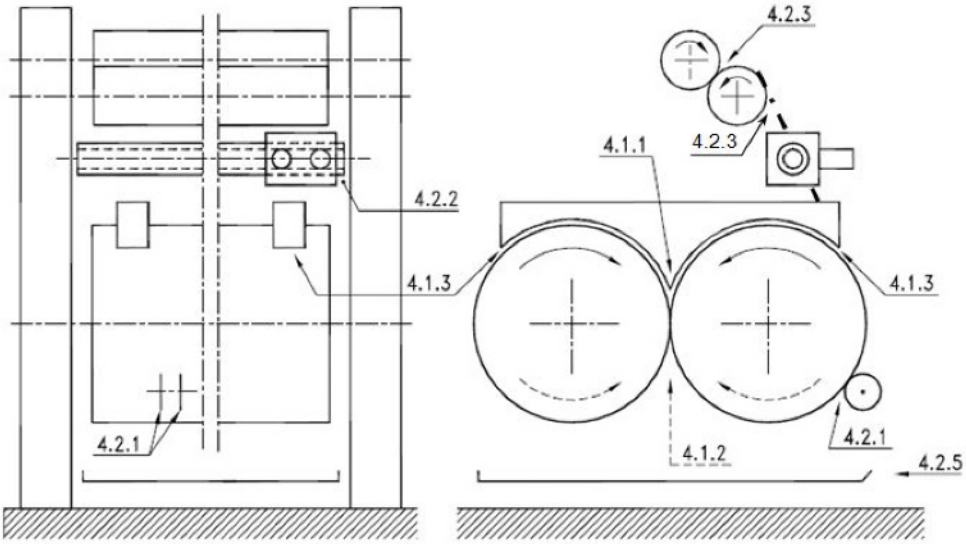

Figure 3 — Location of mechanical hazards on a two-roll mill shown with a strip cutting device and a stock blender

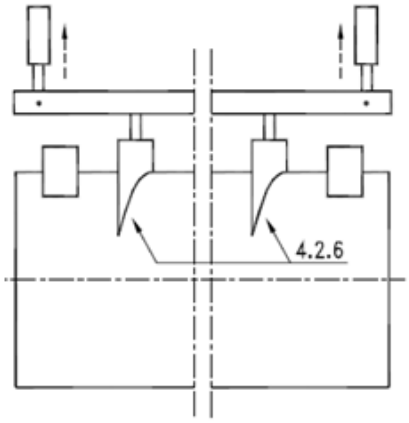

Figure 4 — Location of mechanical hazards on a two-roll mill with retractable ploughs

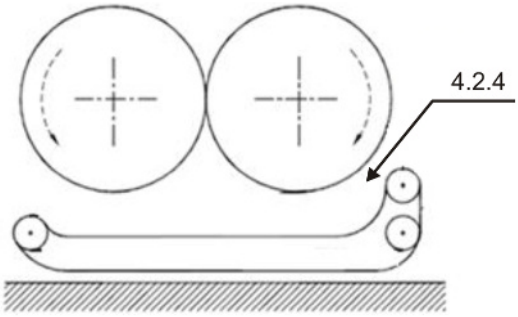

Figure 5 — Location of mechanical hazards on a two-roll mill with a recovery conveyor belt

AVA Documents
Document Sharing Hub

Full document details: BS EN 1417:2014

Table 1 — List of significant hazards

	Significant hazards	Applicable subclauses in Clause 5
4	**General hazards**	5.1
4.1	**Mechanical hazards related to the mill rolls:**	
4.1.1 4.1.2	Hazards of drawing-in and crushing between the mills rolls during normal (forward and reverse) operation	5.2.1.1 5.2.1.5 5.2.2.1 5.2.2.2 5.2.3.2 5.2.3.3 5.2.3.4 5.2.4
4.1.3	Hazard of drawing-in and crushing between the stock guides and the mill rolls	5.2.1.4
4.1.4	Hazards resulting from reduction of braking performance	5.2.1.2
4.1.5	Hazards of drawing-in and crushing in the drive mechanism of the mill rolls	5.2.1.3
4.2	**Mechanical hazards related to other equipment on large two-roll mills:**	
4.2.1	Hazard created by the strip cutting device: — cutting hazards due to involuntary contact with the cutting edges of blades or rotating discs; — cutting, shearing and crushing hazards caused by movements of the strip cutting devices (with cutting or non-cutting edges) and their actuating mechanisms	5.2.2.4
4.2.2	Hazard of crushing between the stock blender carriage and the machine frame	5.2.2.5
4.2.3	Hazard of drawing-in and crushing between the stock blender rolls and hazard of trapping between the rubber strip and the blender rolls	5.2.2.6
4.2.4	Hazard of drawing-in and crushing between the recovery conveyor belt and the mill roll, when the mill rolls are in reverse motion	5.2.2.7
4.2.5	Hazard of impact due to the forward movement of the mill tray	5.2.2.8
4.2.6	Hazard of drawing-in and crushing between the retractable ploughs and the mill roll	5.2.2.9
4.2.7	Hazard of crushing between powered stock guides and fixed parts	5.2.2.3

Documents
Document Sharing Hub
Full document details: BS EN 1417:2014