BS EN 1457-1:2012

BSI Standards Publication

Chimneys — Clay/ceramic flue liners

Part 1: Flue liners operating under dry conditions — Requirements and test methods

bsi.

...making excellence a habit.™

Document Sharing Hub

National foreword

This British Standard is the UK implementation of EN 1457-1:2012. Together with BS EN 1457-2:2012, it supersedes BS EN 1457:1999 which is withdrawn.

The UK participation in its preparation was entrusted to Technical Committee B/506/3, Chimneys and their components having inner linings of clay or ceramic.

A list of organizations represented on this committee can be obtained on request to its secretary.

This publication does not purport to include all the necessary provisions of a contract. Users are responsible for its correct application.

© The British Standards Institution 2012. Published by BSI Standards Limited 2012

ISBN 978 0 580 64233 3

ICS 91.060.40

Compliance with a British Standard cannot confer immunity from legal obligations.

This British Standard was published under the authority of the Standards Policy and Strategy Committee on 29 February 2012.

Amendments issued since publication

Date	Text affected

Documents
Document Sharing Hub

Full document details: BS EN 1457-1:2012

EUROPEAN STANDARD

NORME EUROPÉENNE

EUROPÄISCHE NORM

EN 1457-1

January 2012

ICS 91.060.40

Supersedes EN 1457:1999

English Version

Chimneys - Clay/ceramic flue liners - Part 1: Flue liners operating under dry conditions - Requirements and test methods

Conduits de fumée - Conduits intérieurs en terre cuite/céramique - Partie 1: Exigences et méthodes d'essai pour utilisation en conditions sèches

Abgasanlagen - Keramik-Innenrohre - Teil 1: Innenrohre für Trockenbetrieb - Anforderungen und Prüfungen

This European Standard was approved by CEN on 16 December 2011.

CEN members are bound to comply with the CEN/CENELEC Internal Regulations which stipulate the conditions for giving this European Standard the status of a national standard without any alteration. Up-to-date lists and bibliographical references concerning such national standards may be obtained on application to the CEN-CENELEC Management Centre or to any CEN member.

This European Standard exists in three official versions (English, French, German). A version in any other language made by translation under the responsibility of a CEN member into its own language and notified to the CEN-CENELEC Management Centre has the same status as the official versions.

CEN members are the national standards bodies of Austria, Belgium, Bulgaria, Croatia, Cyprus, Czech Republic, Denmark, Estonia, Finland, France, Germany, Greece, Hungary, Iceland, Ireland, Italy, Latvia, Lithuania, Luxembourg, Malta, Netherlands, Norway, Poland, Portugal, Romania, Slovakia, Slovenia, Spain, Sweden, Switzerland, Turkey and United Kingdom.

EUROPEAN COMMITTEE FOR STANDARDIZATION
COMITÉ EUROPÉEN DE NORMALISATION
EUROPÄISCHES KOMITEE FÜR NORMUNG

Management Centre: Avenue Marnix 17, B-1000 Brussels

© 2012 CEN All rights of exploitation in any form and by any means reserved worldwide for CEN national Members.

Ref. No. EN 1457-1:2012: E

Documents
Document Sharing Hub

Full document details: BS EN 1457-1:2012

Contents

Page

Foreword 5
1 Scope 6
2 Normative references 6
3 Terms and definitions 6
4 Flue liners and openings 8
4.1 Flue liner cross-sections 8
4.2 Inspection openings and chimney junctions and inspection doors 8
5 Types of flue liner 9
6 Materials 10
7 Tolerances on dimensions 10
7.1 Transverse dimension 10
7.2 Height 10
7.3 Angle of curvature 10
7.4 Straightness 11
7.5 Squareness of ends 11
7.6 Deviation from shape of cross section 11
7.7 Geometry of joints 11
8 Proof load 11
8.1 Straight flue liners 11
8.2 Curved flue liners 11
8.3 Minimum load for inspection opening sections 11
9 Gas tightness /leakage, thermal resistance and soot fire resistance for straight flue liners 12
9.1 Initial test 12
9.2 Final gas tightness after testing 12
9.2.1 General 12
9.2.2 Final gas tightness after sootfire testing 12
9.2.3 Final gas tightness after thermal shock testing 12
10 Durability 13
10.1 Corrosion resistance 13
10.2 Freeze/Thaw resistance 13
11 Water absorption and bulk density 13
11.1 General 13
11.2 Water absorption 13
11.3 Bulk density 14
12 Abrasion resistance 14
13 Flow resistance 14
14 Thermal resistance 14
15 Evaluation of conformity 14
15.1 General 14
15.2 Initial type testing 14
15.3 Further type tests 14
15.4 Factory production control 15
16 Test methods 15
16.1 Size 15

Documents
Document Sharing Hub

Full document details: BS EN 1457-1:2012

16.2 Height ... 15
16.3 Angle of curvature ... 16
16.4 Straightness ... 16
16.5 Squareness of ends ... 16
16.6 Deviation from shape of cross-section ... 17
16.7 Proof load ... 19
16.7.1 Test specimen ... 19
16.7.2 Testing equipment ... 19
16.7.3 Test procedure ... 19
16.8 Thermal testing ... 20
16.8.1 Test flue ... 20
16.8.2 Test equipment ... 20
16.8.3 Assembly of test flue ... 22
16.8.4 Thermal conditioning ... 22
16.8.5 Measurement of leakage rate ... 23
16.8.6 Expression of results ... 23
16.9 Corrosion resistance ... 23
16.9.1 Test specimens ... 23
16.9.2 Test equipment ... 24
16.9.3 Test procedure ... 24
16.9.4 Expression of results ... 25
16.10 Water absorption ... 25
16.10.1 Test specimen ... 25
16.10.2 Test equipment ... 25
16.10.3 Test procedure ... 25
16.10.4 Expression of results ... 25
16.11 Bulk density ... 26
16.11.1 Test specimen ... 26
16.11.2 Test equipment ... 26
16.11.3 Test procedure ... 26
16.11.4 Expression of results ... 26
16.12 Abrasion resistance ... 26
16.12.1 Test flue ... 26
16.12.2 Test equipment ... 27
16.12.3 Test procedure ... 27
16.12.4 Expression of results ... 27

17 Designation ... 28

18 Marking ... 29

Annex A (normative) Sampling procedures for an AQL of 10 % and inspection level S2 ... 30
A.1 Acceptability determination ... 30
A.1.1 Single sampling ... 30
A.1.2 Double sampling ... 30
A.2 Normal inspection ... 30
A.3 Normal to reduced inspection ... 31
A.4 Reduced to normal inspection ... 32
A.5 Tightened inspection ... 32
A.6 Tightened to normal inspection ... 32
A.7 Discontinuation of inspection ... 32

Annex B (normative) Thermal resistance ... 33
B.1 Method 1: simplified calculation for flue liners without cavities ... 33
B.2 Method 2: thermal resistance of flue liners with or without cavities ... 33
B.2.1 General ... 33
B.2.2 Data ... 34
B.2.3 Specific conditions for the cavities ... 35
B.2.4 Calculations ... 38
B.3 Method Approximate thermal resistance values ... 38

Annex C (normative) Measurement of the coefficient of friction of chimneys ... 40

AVA Documents
Document Sharing Hub
Full document details: BS EN 1457-1:2012

Annex D (informative) **Comparison with designation given in EN 1443:2003** 42

Annex ZA (informative) **Clauses of this European Standard addressing the provisions of the EU Construction Products Directive** 43
ZA.1 Scope and relevant characteristics 43
ZA.2 Procedure of attestation of conformity of clay/ceramic flue liners and fittings 44
ZA.2.1 System of attestation of conformity 44
ZA.2.2 EC Certificate and Declaration of conformity 45
ZA.3 CE Marking and labelling 46

Bibliography 49

Documents
Document Sharing Hub

Full document details: BS EN 1457-1:2012

Foreword

This document (EN 1457-1:2012) has been prepared by Technical Committee CEN/TC 166 “Chimneys”, the secretariat of which is held by ASI.

This European Standard shall be given the status of a national standard, either by publication of an identical text or by endorsement, at the latest by July 2012, and conflicting national standards shall be withdrawn at the latest by July 2012.

Attention is drawn to the possibility that some of the elements of this document may be the subject of patent rights. CEN [and/or CENELEC] shall not be held responsible for identifying any or all such patent rights.

This document supersedes EN 1457:1999.

This document has been prepared under a mandate given to CEN by the European Commission and the European Free Trade Association, and supports essential requirements of EU Directive(s).

For relationship with EU Directive(s), see informative Annex ZA, which is an integral part of this document.

EN 1457 is made of two parts:

— EN 1457-1, *Chimney — Clay/ceramic flue liners — Part 1: Flue liners operating under dry conditions — Requirements and test methods*;

— EN 1457-2, *Chimney — Clay/ceramic flue liners — Part 2: Flue liners operating under wet conditions — Requirements and test methods*.

The main changes with respect to the previous edition are:

EN 1457 has been split in 2 parts: EN 1457-1 is a product standard for clay/ceramic flue liners operating under dry conditions.

According to the CEN/CENELEC Internal Regulations, the national standards organizations of the following countries are bound to implement this European Standard: Austria, Belgium, Bulgaria, Croatia, Cyprus, Czech Republic, Denmark, Estonia, Finland, France, Germany, Greece, Hungary, Iceland, Ireland, Italy, Latvia, Lithuania, Luxembourg, Malta, Netherlands, Norway, Poland, Portugal, Romania, Slovakia, Slovenia, Spain, Sweden, Switzerland, Turkey and the United Kingdom.

Documents
Document Sharing Hub
Full document details: BS EN 1457-1:2012

1 Scope

This European Standard is a product standard for clay/ceramic flue liners operating under dry conditions with solid walls or walls with vertical perforations for use in the construction of multiwall chimneys and flue pipes which serve to convey products of combustion from fireplaces or heating appliances to the outside atmosphere by negative or positive pressure. It includes the flue liners used for domestic and industrial chimneys which are not structurally independent (free-standing). This European Standard specifies the performance requirements for factory made flue liners and chimney fittings. Testing including thermal testing with or without insulation, marking and inspection are covered by this standard. This part does not cover flue liners operating under wet conditions.

2 Normative references

The following referenced documents are indispensable for the application of this document. For dated references, only the edition cited applies. For undated references, the latest edition of the referenced document (including any amendments) applies.

EN 312, *Particleboards — Specifications*

EN 1443:2003, *Chimneys — General requirements*

EN 10088-1, *Stainless steels — Part 1: List of stainless steels*

EN 14297:2004, *Chimneys — Freeze-thaw resistance test method for chimney products*

EN ISO 6946, *Building components and building elements — Thermal resistance and thermal transmittance — Calculation method (ISO 6946)*

EN ISO 7500-1, *Metallic materials — Verification of static uniaxial testing machines — Part 1: Tension/compression testing machines — Verification and calibration of the force-measuring system (ISO 7500-1)*

ISO 2859-1, *Sampling procedures for inspection by attributes — Part 1: Sampling schemes indexed by acceptance quality limit (AQL) for lot-by-lot inspection*

3 Terms and definitions

For the purposes of this document, the terms and definitions given in EN 1443:2003 and the following apply.

3.1
nominal size
numerical designation of size which is a convenient round number equal to or approximately equal to either:

a) the internal diameter in millimetres of circular flue liners;

b) the internal width in millimetres of square flue liners;

c) the internal width and breadth in millimetres of the cross section of rectangular flue liners

3.2
nominal height
numerical designation of the internal height in millimetres of a straight flue liner which is a convenient round number approximately equal to the internal height of the flue liner

NOTE See Figure 1.

Documents
Document Sharing Hub

Full document details: BS EN 1457-1:2012

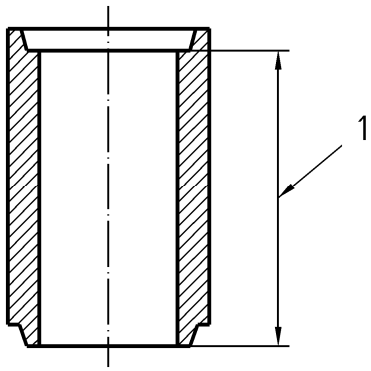

Key

1 internal height

Figure 1 — Internal height

3.3
nominal angle of curvature
angle subtended in degrees by a curved flue liner at the centre of the curve

NOTE See Figure 2.

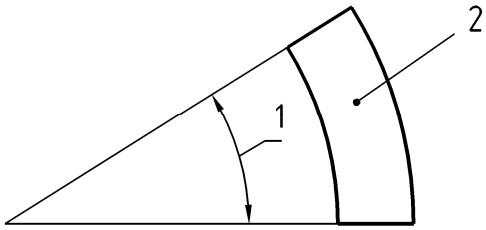

Key

1 angle of curvature
2 curved flue liner

Figure 2 — Angle of curvature

3.4
wet operating condition
condition when the chimney is designed to operate normally with the temperature of the inner surface of the flue liner above the water dew point

3.5
dry operating condition
condition when the chimney is designed to operate normally with the temperature of the inner surface of the flue liner at and below the water dew point

Documents
Document Sharing Hub
Full document details: BS EN 1457-1:2012

4 Flue liners and openings

4.1 Flue liner cross-sections

Flue liners shall be either:

a) circular or square in cross-section with rebated or spigot and socket ends;

b) square or rectangular in cross-section with rebated ends and rounded internal corners;

c) circular, square or rectangular in cross-section with butt joints and jointed with a sleeve;

d) circular or square in cross-section with taper joints.

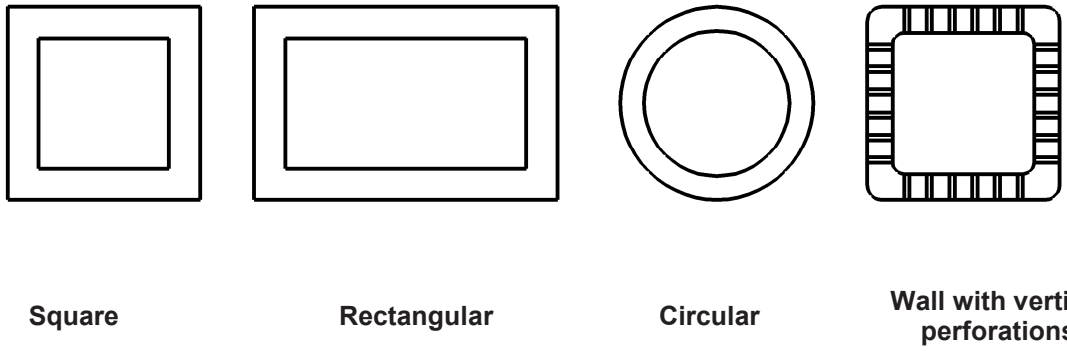

Figure 3 — Examples of cross-section configuration

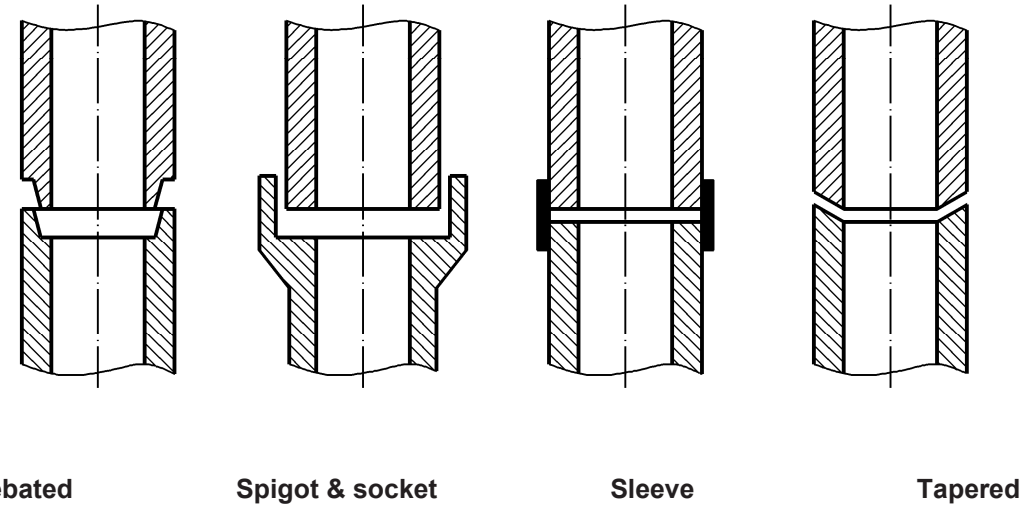

Figure 4 — Joint configuration

4.2 Inspection openings and chimney junctions

Inspection openings are used for inspection and cleaning of the inner liners of chimneys and for soot removal and shall meet the requirements of flue liners as appropriate.

Chimney junctions are used to connect flues from heat appliances to chimneys. Chimney junctions are purpose-made tee-pieces or inner liner sections with an opening to which branches are fitted. The branch

Documents
Document Sharing Hub
Full document details: BS EN 1457-1:2012

angles can be 45° to 95° (α in Figure 5). At the position of junctions, the outer walls have corresponding openings.

Chimney junctions should have the same cross-sectional area as the flue liner. Reductions and expansions are acceptable provided that the resistance to the exhaust gases is not increased.

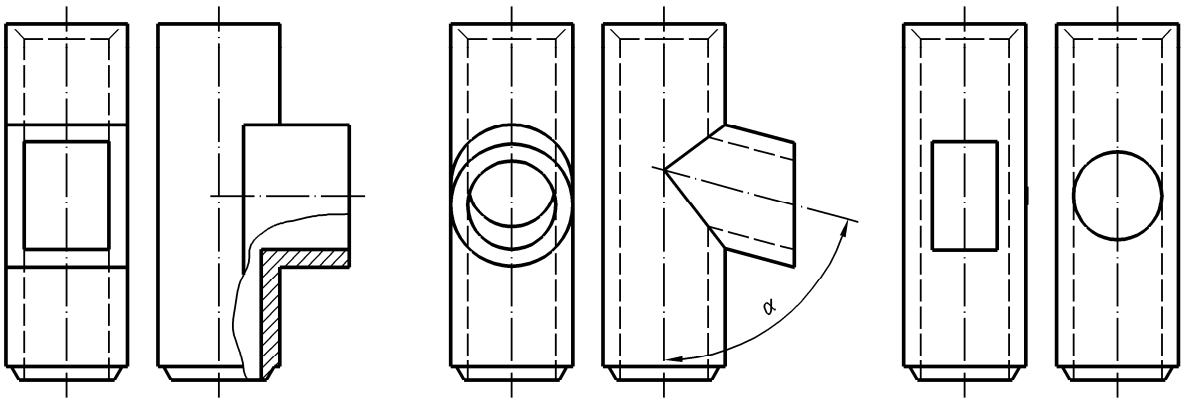

Figure 5 — Examples of inspection openings and chimney junctions

5 Types of flue liner

There are four main types of clay/ceramic flue liner dependent on working temperature, with sub-classes dependent on whether the flue liners are to be used in chimneys designed to work under negative or positive pressure or are to have soot fire resistance. The types, working temperatures, test pressures and maximum leakage rates are given in Table 1. The suitability of each type of flue liner to be used in chimneys designed to operate under negative or positive pressure is also given.

NOTE A flue liner can be designated in one or more types provided that it complies with the appropriate requirements for each type.

Documents
Document Sharing Hub
Full document details: BS EN 1457-1:2012

Table 1 — Types of clay/ceramic flue liners operating under dry conditions, air test pressures and maximum leakage rates after thermal testing

Types of flue liner	Temperature Class	Pressure Class	Soot fire resistance Class	Test pressure Pa	Maximum leakage rate $m^3\ s^{-1}\ m^{-2} \cdot 10^{-3}$
A1 N2	600	Negative	Yes (G)	20	3
A1 N1	600	Negative	Yes (G)	40	2
A2 N2	600	Negative	No (O)	20	3
A2 N1	600	Negative	No (O)	40	2
A2 P1	600	Positive	No (O)	200	0,006
B1 N2	400	Negative	Yes (G)	20	3
B1 N1	400	Negative	Yes (G)	40	2
B2 N2	400	Negative	No (O)	20	3
B2 N1	400	Negative	No (O)	40	2
B2 P1	400	Positive	No (O)	200	0,006
C2 N2	300	Negative	No (O)	20	3
C2 N1	300	Negative	No (O)	40	2
C2P1	300	Positive	No (O)	200	0,006
D1 N2	200	Negative	No (O)	20	3
D1 N1	200	Negative	No (O)	40	2
D1 P1	200	Positive	No (O)	200	0,006

6 Materials

Flue liners shall be manufactured from suitable clay/ceramic material which, when fired, meet the performance requirements given in this European Standard.

Flue liners may be unglazed or glazed on the interior and/or exterior. When glazed, they need not be glazed on the jointing surfaces.

7 Tolerances on dimensions

7.1 Transverse dimension

When tested in accordance with 16.1, the internal diameter of circular flue liners measured on any diameter shall not deviate more than ± 3 % of the manufacturer's stated nominal internal diameter.

The internal width or breadth of square or rectangular section flue liners shall not deviate more than ± 3 % of the manufacturer's stated nominal internal length of the side.

7.2 Height

When tested in accordance with 16.2, the height of a flue liner shall not deviate more than ± 3 % on the manufacturer's stated nominal height subject to a maximum value of 20 mm.

7.3 Angle of curvature

When tested in accordance with 16.3, the angle of curvature of curved flue liners shall not deviate more than ± 5° on the manufacturer's stated nominal curvature.

Documents
Document Sharing Hub

Full document details: BS EN 1457-1:2012

7.4 Straightness

When tested in accordance with 16.4, the permissible deviation from straightness of straight flue liners shall be 1 % of the test length.

7.5 Squareness of ends

When tested in accordance with 16.5, the permissible deviation from square of the ends of straight flue liners, shall be not greater than an angle of slope 30 mm/m.

7.6 Deviation from shape of cross section

When tested in accordance with 16.6, the permissible deviation from square of the angles of, and flatness of walls for square or rectangular shape straight flue liners, shall be not greater than 5 % of the manufacturer's stated nominal internal width or breadth.

7.7 Geometry of joints

The design and dimensions of the joints shall be as specified by the manufacturer to provide an adequate joint.

8 Proof load

8.1 Straight flue liners

When tested in accordance with 16.7, straight flue liners shall withstand an intensity of loading of 10 MN/m^2.

8.2 Curved flue liners

Where curved flue liners are fired in a plant alongside straight flue liners, using the same materials and firing process, the proof load of these curved flue liners is deemed to be that of the straight flue liners when tested in accordance with 16.7.

If curved flue liners are not normally fired alongside straight flue liners, straight flue liners or short lengths of straight flue liners made for test purposes, using the same materials and firing process as for curved flue liners, shall be tested for compliance with the requirements of 8.1.

8.3 Minimum load for inspection opening sections

The maximum height of the chimney shall be determined and declared according to the test described in 16.7.

Table 2 — Minimum load

Height of chimney in m	Minimum load in kN
≤12,5	25
> 12,5 ≤ 25	50
> 25 ≤ 50	100

For chimneys with area greater than 0,04 m^2 the following equation shall be used:

$$F = \chi \cdot H \cdot G/100 \quad (1)$$

Documents
Document Sharing Hub
Full document details: BS EN 1457-1:2012

where

F is the minimum load in kilonewtons;

χ is the safety factor = 5;

H is the height of chimney in metres;

G is the weight per metre in kilograms per metre.

9 Gas tightness /leakage, thermal resistance and soot fire resistance for straight flue liners

9.1 Initial test

Prior to thermal testing a test flue constructed in accordance with 16.8.3 with N1 and N2 liners shall have a leakage rate not greater than 2 $m^3 s^{-1} m^{-2} \times 10^{-3}$ of internal surface area tested at a differential pressure of (40 ± 2) Pa when tested as described in 16.8.5.

Prior to thermal testing a test flue constructed in accordance with 16.8.3 with P1 liners shall have a leakage rate not greater than 0,006 $m^3 s^{-1} m^{-2} \times 10^{-3}$ of internal surface area tested at a differential pressure of (200 ± 10) Pa when tested as described in 16.8.5.

Where chimney fittings are fired in a plant alongside straight flue liners using the same material and firing process, the gas tightness/leakage, thermal shock resistance and soot fire resistance shall be deemed to be that of straight flue liners when tested in accordance with 16.8.3.

If the chimney fittings are not normally fired alongside straight flue liners, straight flue liners or short lengths of straight flue liner shall be made for test purposes using the same material and firing process as for chimney fittings shall be tested for complying with 9.2.1.

9.2 Final gas tightness after testing

9.2.1 General

When flue liners are tested for soot fire resistance, thermal shock testing need not be carried out.

9.2.2 Final gas tightness after sootfire testing

When tested in accordance with 16.8 flue liners A1 and B1 shall have a leakage rate after sootfire testing not greater than the values given in Table 3 for the appropriate type of flue liner, test temperature and differential pressure. Flue liners shall be tested with insulation as described in 16.8.3 or they shall be tested without insulation. If they are tested without insulation they shall be marked accordingly.

The precision for the appropriate testing differential pressure is that given in 9.1.

9.2.3 Final gas tightness after thermal shock testing

When tested in accordance with 16.8 flue liners not included in 9.2 shall have a leakage rate after thermal shock testing not greater than the values given in Table 3 for the appropriate type of flue liner, test temperature and differential pressure. Flue liners shall be tested with insulation as described in 16.8.3 or they shall be tested without insulation. If they are tested without insulation they shall be marked accordingly.

Documents
Document Sharing Hub

Full document details: BS EN 1457-1:2012

Table 3 — Test temperature, test pressure and leakage rates

Type of flue liner	Test temperature °C	Test pressure Pa	Maximum leakage rate $m^{3.}\ s^{-1.}\ m^{-2.}\ 10^{-3}$
A1 N2	1 000	20	3
A1 N1	1 000	40	2
A2 N2	700	20	3
A2 N1	700	40	2
A2 P1	700	200	0,006
B1 N2	1 000	20	3
B1 N1	1 000	40	2
B2 N2	500	20	3
B2 N1	500	40	2
B2 P1	500	200	0,006
C2 N2	350	20	3
C2 N1	350	40	2
C2 P1	350	200	0,006
D1 N2	250	20	3
D1 N1	250	40	2
D1 P1	250	200	0,006

10 Durability

10.1 Corrosion resistance

When tested in accordance with 16.9, the mass loss from any test piece shall not exceed a mass loss of 5 %.

NOTE This is an accelerated test to represent a corrosion resistance and practical installed life of at least 100 years.

10.2 Freeze/Thaw resistance

Where national regulations require freeze/thaw resistance of flue liners, they shall be tested according to EN 14297. The product shall not present any damage of type 7, 8, 9 and 10 in accordance with EN 14297:2004, Table 1.

11 Water absorption and bulk density

11.1 General

The flue liner body shall be tested for either water absorption or bulk density for production control.

11.2 Water absorption

When tested in accordance with 16.10, the mean water absorption values expressed as a percentage of five samples shall not vary more than ± 2,5 % from the mean value obtained from the last type test.

AVA Documents
Document Sharing Hub
Full document details: BS EN 1457-1:2012

11.3 Bulk density

When tested in accordance with 16.11, the mean bulk density of five samples shall not vary more than ± 100 kg/m^3 from the mean value obtained from the last type test.

12 Abrasion resistance

When tested in accordance with 16.12, the mass of any material dislodged shall not exceed 0,03 kg/m^2 of the total exposed area of the inner surface of the flue.

13 Flow resistance

Where required, the mean roughness of flue liners shall be declared according to Annex C.

14 Thermal resistance

The values of thermal resistance of flue liners shall be declared by the manufacturer for a flue temperature of 200 °C. The reference calculation method for flue liners without cavities shall be as given in B.1, and the reference calculation method for flue liners with cavities shall be as given in B.2.

15 Evaluation of conformity

15.1 General

The compliance of the clay/ceramic flue liners under dry conditions with the requirements of this European Standard and with the declared values (including classes) shall be demonstrated by:

— initial type testing;

— factory production control by the manufacturer, including product assessment.

15.2 Initial type testing

All characteristics are subject to Initial type testing.

It is also recommended to make reference to the use of historical data. “Tests previously performed on the same products in accordance with the provisions of this standard (same characteristic(s), test method, sampling procedure, system of attestation of conformity, etc.) may be taken into account."

Type tests relating to material composition shall be performed initially together with factory production control tests as given in Table 4. One test shall be carried out for each requirement.

The thermal testing shall be carried out on one size of flue liner for each geometrical configuration e.g. circular, square, rectangular. For circular flue liners the size to be tested shall be 200 mm ± 50 mm internal diameter. For other geometrical configurations the flue liner shall have an equivalent cross-sectional area range.

15.3 Further type tests

Type tests shall be performed when a change is made either in material composition, processing technique or the design or method of manufacture of the flue liner, but they may be performed more frequently by incorporation into a plan for monitoring the consistency of manufacture (see Table 4).

Documents
Document Sharing Hub

Full document details: BS EN 1457-1:2012

15.4 Factory production control

To achieve compliance with this European Standard the manufacturer shall establish and maintain an effective documented quality system.

Factory production control tests are carried out following manufacture to monitor the quality of product. (see Table 4).

Sampling and testing of any batch shall be completed prior to removal from the works and shall be in accordance with ISO 2859-1 at an AQL of 10 % and inspection level S2. Isolated batches of units shall be assessed in accordance with tightened inspection procedures, with a maximum batch size of 1 200 (see Annex A).

Batches rejected under the factory production control procedure may be resubmitted once, after removal of units with previously undetected visible defects, under the tightened inspection procedures, in respect only of the defect that caused initial rejection.

NOTE A quality system assessed by a certification body which complies with the requirements of EN 45012 can be applied to ensure that the requirements of EN ISO 9001:2008 and Clause 15 are complied with.

Table 4 — Factory production control and initial type tests

Item	Relevant requirement clauses	
	Factory production control 15.4 [a]	Initial type tests 15.2 and 15.3
Straight flue liners	7.1, 7.2, 7.4, 7.5, 7.6, 11	8.1, 9.2, 10, 12, and 13
Flue liner bends	7.1, 7.3, 11	8.2, 10
Opening section	7.1, 7.2, 11	8.3
[a] The tests carried out during FPC are intended to verify that the performance requirements assessed through the initial type testing are maintained.		

16 Test methods

16.1 Size

The maximum and minimum diameters of a clay/ceramic flue liner shall be those calculated from the tolerances given in 7.1. If direct measurement is to be carried out, two measurements should be taken at the observed maximum and minimum diameters.

The test also may be carried out by using two gauges whose diameters are set at the minimum and maximum diameters. The minimum gauges should be able to be turned through 360° within the ends of the flue liner. The maximum gauge should not be able to enter the flue liner when tested through a rotation of 360°.

For square and rectangular flue liners, the internal cross-section dimensions shall be measured between the mid-points of opposite sides of the flue liners.

16.2 Height

The maximum and minimum internal height of a clay/ceramic flue liner shall be those calculated from the tolerances given in 7.2. If direct measurement is to be carried out, two measurements should be taken at the observed maximum and minimum heights.

The test can also be carried out by using two gauges whose heights are set at the minimum and maximum internal heights. The minimum gauges should be not able to fit over the internal height of the flue liner

AVA Documents
Document Sharing Hub
Full document details: BS EN 1457-1:2012