BS EN 14749:2016+A1:2022

BSI Standards Publication

Furniture — Domestic and kitchen storage units and kitchen-worktops — Safety requirements and test methods

Documents
Document Sharing Hub

Full document details: BS EN 14749:2016+A1:2022

National foreword

This British Standard is the UK implementation of EN 14749:2016+A1:2022. It supersedes BS EN 14749:2016, which is withdrawn.

The start and finish of text introduced or altered by amendment is indicated in the text by tags. Tags indicating changes to CEN text carry the number of the CEN amendment. For example, text altered by CEN amendment A1 is indicated by ▌A1⟩ ⟨A1▌.

The UK participation in its preparation was entrusted to Technical Committee FW/0/2, Domestic and Contract Furniture.

A list of organizations represented on this committee can be obtained on request to its committee manager.

Contractual and legal considerations

This publication has been prepared in good faith, however no representation, warranty, assurance or undertaking (express or implied) is or will be made, and no responsibility or liability is or will be accepted by BSI in relation to the adequacy, accuracy, completeness or reasonableness of this publication. All and any such responsibility and liability is expressly disclaimed to the full extent permitted by the law.

This publication is provided as is, and is to be used at the recipient's own risk.

The recipient is advised to consider seeking professional guidance with respect to its use of this publication.

This publication is not intended to constitute a contract. Users are responsible for its correct application.

© The British Standards Institution 2022
Published by BSI Standards Limited 2022

ISBN 978 0 539 12319 7

ICS 97.040.10; 97.140

Compliance with a British Standard cannot confer immunity from legal obligations.

This British Standard was published under the authority of the Standards Policy and Strategy Committee on 29 February 2016.

Amendments/corrigenda issued since publication

Date	Text affected
31 August 2022	Implementation of CEN amendment A1:2022

AVA Documents
Document Sharing Hub

Full document details: BS EN 14749:2016+A1:2022

EUROPEAN STANDARD

NORME EUROPÉENNE

EUROPÄISCHE NORM

EN 14749:2016+A1

May 2022

ICS 97.040.10; 97.140

Supersedes EN 14749:2016

English Version

Furniture - Domestic and kitchen storage units and kitchen-worktops - Safety requirements and test methods

Ameublement - Meubles de rangement domestiques et de cuisine et plans de travail de cuisine - Exigences de sécurité et méthodes d¿essai

Möbel - Wohn- und Küchenbehältnismöbel und Küchenarbeitsplatten - Sicherheitstechnische Anforderungen und Prüfverfahren

This European Standard was approved by CEN on 21 November 2015 and includes Amendment 1 approved by CEN on 13 March 2022.

CEN members are bound to comply with the CEN/CENELEC Internal Regulations which stipulate the conditions for giving this European Standard the status of a national standard without any alteration. Up-to-date lists and bibliographical references concerning such national standards may be obtained on application to the CEN-CENELEC Management Centre or to any CEN member.

This European Standard exists in three official versions (English, French, German). A version in any other language made by translation under the responsibility of a CEN member into its own language and notified to the CEN-CENELEC Management Centre has the same status as the official versions.

CEN members are the national standards bodies of Austria, Belgium, Bulgaria, Croatia, Cyprus, Czech Republic, Denmark, Estonia, Finland, France, Germany, Greece, Hungary, Iceland, Ireland, Italy, Latvia, Lithuania, Luxembourg, Malta, Netherlands, Norway, Poland, Portugal, Republic of North Macedonia, Romania, Serbia, Slovakia, Slovenia, Spain, Sweden, Switzerland, Turkey and United Kingdom.

EUROPEAN COMMITTEE FOR STANDARDIZATION
COMITÉ EUROPÉEN DE NORMALISATION
EUROPÄISCHES KOMITEE FÜR NORMUNG

CEN-CENELEC Management Centre: Rue de la Science 23, B-1040 Brussels

© 2022 CEN All rights of exploitation in any form and by any means reserved worldwide for CEN national Members.

Ref. No. EN 14749:2016+A1:2022 E

Documents
Document Sharing Hub

Full document details: BS EN 14749:2016+A1:2022

Contents

Page

European foreword 4
Introduction 5
1 Scope 6
2 Normative references 6
3 Terms and definitions 6
4 Test procedure and tolerances 9
4.1 General 9
4.2 Sequence of testing 9
4.3 Tolerances 9
5 Safety requirements 9
5.1 Principles of safety requirements 9
5.1.1 General 9
5.1.2 Determination of centre of gravity 10
5.1.3 Determination of total mass 10
5.2 General safety requirements 10
5.2.1 General 10
5.2.2 Units moving vertically 11
5.2.3 Lids 11
5.2.4 Vertically moving roll fronts and vertically moving sliding doors 11
5.2.5 Extension elements 11
5.3 Structural safety requirements 11
5.3.1 General 11
5.3.2 Shelves 11
5.3.3 Shelf supports 12
5.3.4 Storage area/-volume for heavy appliances 12
5.3.5 Pivoted doors 12
5.3.6 Sliding doors and horizontal roll fronts 12
5.3.7 Extension elements 12
5.3.8 Bottom hinged flaps 14
5.3.9 Top hinged flaps 14
5.3.10 Kitchen-worktops and other top surfaces 14
5.3.11 Wall hanging units and top hanging units 15
5.4 Stability 16
5.4.1 General 16
5.4.2 Kitchen floor units with kitchen-worktops 17
5.4.3 Additional stability requirements for TV-furniture 17
5.5 Floor standing units intended to be attached to the building 20
5.6 Vertical glass components 20
6 Product information 21
7 Test report 21
Annex A (normative) Additional test methods 22
A.1 Vertical downwards static load of top hinged flaps 22
A.2 Test methods for the determination of the stability of TV-furniture 22
A.2.1 Test Equipment 22

Documents
Document Sharing Hub
Full document details: BS EN 14749:2016+A1:2022

A.2.2 Stability test methods for TV-furniture 23
A.3 Sidewards detachment test 25
Annex B (informative) Guide to testing of units and components 27
Annex C (informative) Example of loading of wall hanging units and top hanging units (see 5.3.11.3 overload) 32
Annex D (informative) Method for calculation of vertical and horizontal acting forces 33
Bibliography 37

Documents
Document Sharing Hub

Full document details: BS EN 14749:2016+A1:2022

European foreword

This document (EN 14749:2016+A1:2022) has been prepared by Technical Committee CEN/TC 207 “Furniture”, the secretariat of which is held by UNI.

This European Standard shall be given the status of a national standard, either by publication of an identical text or by endorsement, at the latest by November 2022, and conflicting national standards shall be withdrawn at the latest by November 2022.

Attention is drawn to the possibility that some of the elements of this document may be the subject of patent rights. CEN shall not be held responsible for identifying any or all such patent rights.

This document supersedes [A1⟩ EN 14749:2016 ⟨A1].

This document includes Amendment 1 approved by CEN on 13 March 2022.

The start and finish of text introduced or altered by amendment is indicated in the text by tags [A1⟩ ⟨A1].

Compared to EN 14749:2005 the following modifications have been made:

a) structure revised;

b) the most test methods removed and replaced by a reference to EN 16122:2012, *Domestic and non-domestic storage furniture — Test methods for the determination of strength, durability and stability*;

c) Clause 3 “Terms and definitions” extended;

d) tests for stability of TV-furniture added;

e) Annex B (informative) “Guide to testing of units and components” amended;

f) Annex D (informative) “Relation between safety requirements, total mass and position of centre of gravity of loaded units or loaded components” deleted;

g) new Annex D (informative) containing a method for calculation of vertical and horizontal acting forces added.

According to the CEN-CENELEC Internal Regulations, the national standards organizations of the following countries are bound to implement this European Standard: Austria, Belgium, Bulgaria, Croatia, Cyprus, Czech Republic, Denmark, Estonia, Finland, France, Germany, Greece, Hungary, Iceland, Ireland, Italy, Latvia, Lithuania, Luxembourg, Malta, Netherlands, Norway, Poland, Portugal, Republic of North Macedonia, Romania, Slovakia, Slovenia, Spain, Sweden, Switzerland, Turkey and the United Kingdom.

Documents
Document Sharing Hub
Full document details: BS EN 14749:2016+A1:2022

Introduction

With this revision the included test methods have been as far as possible taken out of the standard and referenced to:

— EN 16122:2012, *Domestic and non-domestic storage furniture — Test methods for the determination of strength, durability and stability*.

This standard was prepared in order to provide assurance that domestic storage furniture and kitchen-worktops comply with the given requirements and are safe.

The intention of this European Standard is the prevention of serious injury through normal use, as well as foreseeable misuse. It cannot ensure that structural failure will not eventually occur as a result of habitual misuse.

Co-ordinating sizes for kitchen furniture (including kitchen-worktops) kitchen appliances, sinks and decorative panels are covered by EN 1116, *Kitchen furniture — Co-ordinating sizes for kitchen furniture and kitchen appliances*.

Documents
Document Sharing Hub

Full document details: BS EN 14749:2016+A1:2022

1 Scope

[A1] This document specifies safety requirements and test methods for all types of kitchen and bathroom storage units and domestic storage furniture, including TV-furniture, and their components. [A1]

It does not apply to non-domestic storage, office storage, industrial storage, catering equipment, retail storage and industrial storage lockers.

[A1] It does not apply to furniture covered by EN 71 1, Safety of toys — Part 1: Mechanical and physical properties.

The stability requirements do not apply to TV-furniture with a built in TV attachment. Such products are covered by EN 62368 1:2014+A11:2017, Audio/video — Information and communication technology equipment — Part 1: Safety requirements, Clause 8.6. [A1]

It does not include requirements for the resistance to ageing, degradation, flammability and electrical safety.

Safety that is dependent upon the structure of the building is not included, *e.g*. the strength of wall hanging units includes only the cabinet and its components including wall attachment devices. The wall and the wall attachments are not included.

Annex A (normative) contains additional test methods.

Annex B (informative) contains a guide to testing of units and components according to this document.

Annex C (informative) contains an example of loading of wall hanging units.

Annex D (informative) contains a method for calculation of vertical and horizontal acting forces.

2 Normative references

The following documents, in whole or in part, are normatively referenced in this document and are indispensable for its application. For dated references, only the edition cited applies. For undated references, the latest edition of the referenced document (including any amendments) applies.

EN 71-1:2014, *Safety of toys - Part 1: Mechanical and physical properties*

EN 12150-1:2015, *Glass in building — Thermally toughened soda lime silicate safety glass — Part 1: Definition and description*

EN 12600, *Glass in building - Pendulum test - Impact test method and classification for flat glass*

EN 14072:2003, *Glass in furniture - Test methods*

EN 16122:2012, *Domestic and non-domestic storage furniture - Test methods for the determination of strength, durability and stability*

[A1] EN 62368-1:2014+A11:2017, *Audio/video — information and communication technology equipment — Part 1: Safety requirements* [A1]

3 Terms and definitions

For the purposes of this document, the following terms and definitions apply.

3.1
unit
piece of storage furniture

Documents
Document Sharing Hub
Full document details: BS EN 14749:2016+A1:2022

3.2
free standing unit
unit not intended to be attached to a load bearing structure

3.3
floor standing unit intended to be attached to the building
unit intended to be supported by the floor and also attached to a structure

3.4
wall hanging unit
unit intended to be entirely supported by a vertical structure

Note 1 to entry: A vertical structure can be a wall, panel or screen.

3.5
wall attachment device
device including the component that is attached to the cabinet and the component that is attached to the wall

Note 1 to entry: A component that is attached to the cabinet is e.g. a suspension bracket.

Note 2 to entry: A component that is attached to the wall is e.g. a hook, a rail.

3.6
kitchen-worktop
work surface primarily intended to be used for preparing food

3.7
TV-furniture
[A1] unit intended to, or marketed for, supporting a monitor, TV set or similar item [A1]

3.8
component
part of a unit including hardware

3.9
extension element
component that can be pulled out and pushed in

Note 1 to entry: An extension element can be a basket, a drawer or a suspended pocket file.

3.10
storage area
storage volume
space in furniture for storage

Note 1 to entry: A storage area/-volume can be in extension elements and on shelves, bottoms and tops.

3.11
accessible part
part to which access can easily be gained by the user when in its intended configuration of use and for which the probability of unintentional user contact is high

Note 1 to entry: This includes, but is not limited to:

AVA Documents
Document Sharing Hub

Full document details: BS EN 14749:2016+A1:2022

— the exposed edges and corners of storage units to which the user has access when the doors, drawers and extension elements are closed,

— the corners and edges of handles.

3.12
shear and squeeze point
distance between two accessible parts moving relative to each other which can be ≥ 25 mm or ≤ 8 mm in any position during movement

3.13
clear height
unobstructed height above the top of the bottom surface

Note 1 to entry: See Figure 1.

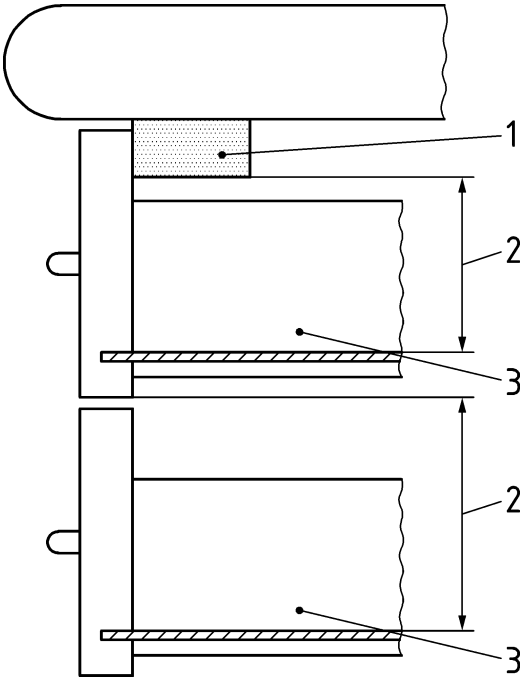

Key

1 structure of the unit

2 clear height

3 extension element

Figure 1 — Clear height

[SOURCE: EN 16122:2012, 3.2 modified - ...or the structure of the unit ... has been deleted; another figure has been included]

3.14
levelling device
adjustable device intended to keep the item of furniture perpendicular to the floor

Note 1 to entry: A levelling device can be an adjustable foot or similar.

Documents
Document Sharing Hub
Full document details: BS EN 14749:2016+A1:2022

3.15
potential energy
multiplication of the total mass (kg) of the unit (or the component), gravity (m/s2) and the height (m) above the floor to the centre of gravity

Note 1 to entry: For the purpose of this European Standard gravity can be considered to be 10 m/s².

3.16
overturn
event at which a furniture unit pivots to a point beyond which the unit continues to fall

A1 3.17
bracket
rigid device to prevent overturning

Note 1 to entry: Normally made of metal; not a flexible device such as strap or cable tie A1

4 Test procedure and tolerances

4.1 General

For all tests referred to in this standard, EN 16122:2012, Clause 4 "General test conditions" and EN 16122:2012, Clause 5 "Test equipment and apparatus" apply.

4.2 Sequence of testing

The tests shall be carried out in the same sequence as the clauses are numbered in this European Standard.

4.3 Tolerances

Unless otherwise stated, the following tolerances are applicable:

— Forces: ± 5 % of the nominal force;

The forces may be replaced by masses. The relationship 10 *N* = 1 kg should be used.

— Velocities: ± 5 % of the nominal velocity;

— Masses: ± 1 % of the nominal mass;

— Dimensions: ± 1 mm of the nominal dimension;

— Angles: ± 2° of the nominal angle.

NOTE For the purposes of uncertainty measurement, test results are not considered to be adversely affected when the above tolerances are met.

5 Safety requirements

5.1 Principles of safety requirements

5.1.1 General

The safety requirements are based upon the knowledge that kitchen units, bathroom units and domestic storage furniture and their components are likely to cause serious injury only when they are

Documents
Document Sharing Hub
Full document details: BS EN 14749:2016+A1:2022

heavy and fall through a significant distance. This is possible if floor standing units overturn, wall or screen hanging units become detached, or heavy components become detached from units.

5.1.2 Determination of centre of gravity

The centre of gravity above the floor (for floor standing units) shall be measured when installed according to the manufacturer's instructions.

Levelling devices shall be set at their middle position.

Height adjustable components shall be placed in their highest position.

The centre of gravity of a component or unit shall be taken as the geometric centre of that unit, except in the case of extension elements, where the geometric centre of the usable volume shall be used.

All wall hanging units or top hanging units or components thereof are considered to have their centre of gravity more than 900 mm above the floor.

5.1.3 Determination of total mass

The total mass is the mass of the component or unit plus the mass determined according to Table 1, unless the unit or component is conspicuously and durably marked by the manufacturer with a maximum load, in which case the unit or component shall be loaded with the stated maximum load multiplied by 1,2. The volume of fixed baskets shall be taken as the volume contained below their top edge.

The volume of extension elements shall be taken as the area of its bottom multiplied by the clear height.

Table 1 — Loads

Component	Load
All horizontal storage areas, including shelves, bottoms, tops and bottom hinged flaps	0,65 kg/dm^2
Extension elements and fixed baskets	0,2 kg/dm^3
Clothes rails	4,0 kg/dm
Suspended filing pockets	2,5 kg/dm [a]
Storage area/-volume (3.10) for heavy appliances (e.g. refrigerator, washing machine)[b]	0,5 kg/dm^3 [c]

[a] Measured perpendicular to the plane of the filing pockets.

[b] Other heavy objects, e.g. aquariums are not covered by this value.

[c] Max. load 200 kg per unit.

5.2 General safety requirements

5.2.1 General

The following requirements apply to all units and components.

Components with which the user can come into contact during normal use shall have no burrs and/or sharp edges, nor shall there be any open-ended tubes.

All movable components accessible during normal use shall have safety distances in any position during movement of ≤ 8 mm or ≥ 25 mm. This applies to any components moving relatively to each other, with the exception of doors, flaps and extension elements including their hardware. The safety distances also apply to the distance between handles/handgrips and other components.

Documents
Document Sharing Hub
Full document details: BS EN 14749:2016+A1:2022