BRITISH STANDARD

BS EN 14782:2006

Self-supporting metal sheet for roofing, external cladding and internal lining — Product specification and requirements

The European Standard EN 14782:2006 has the status of a British Standard

ICS 77.140.50; 77.150.01; 91.060.10; 91.060.20

NO COPYING WITHOUT BSI PERMISSION EXCEPT AS PERMITTED BY COPYRIGHT LAW

BSI Documents
Document Sharing Hub
British Standards

Full document details: BS EN 14782:2006

National foreword

This British Standard is the official English language version of EN 14782:2006.

The UK participation in its preparation was entrusted by Technical Committee B/542, Roofing and cladding products for discontinuous laying, to Subcommittee B/542/5, Sheet roof and wall coverings, which has the responsibility to:

— aid enquirers to understand the text;

— present to the responsible international/European committee any enquiries on the interpretation, or proposals for change, and keep UK interests informed;

— monitor related international and European developments and promulgate them in the UK.

A list of organizations represented on this subcommittee can be obtained on request to its secretary.

Cross-references

The British Standards which implement international or European publications referred to in this document may be found in the *BSI Catalogue* under the section entitled "International Standards Correspondence Index", or by using the "Search" facility of the *BSI Electronic Catalogue* or of British Standards Online.

This publication does not purport to include all the necessary provisions of a contract. Users are responsible for its correct application.

Compliance with a British Standard does not of itself confer immunity from legal obligations.

Summary of pages

This document comprises a front cover, an inside front cover, the EN title page, pages 2 to 41 and a back cover.

The BSI copyright notice displayed in this document indicates when the document was last issued.

This British Standard was published under the authority of the Standards Policy and Strategy Committee on 3 February 2006

© BSI 3 February 2006

ISBN 0 580 47758 4

Amendments issued since publication

Amd. No.	Date	Comments

Documents
Document Sharing Hub

Full document details: BS EN 14782:2006

EUROPEAN STANDARD

NORME EUROPÉENNE

EUROPÄISCHE NORM

EN 14782

January 2006

ICS 77.140.50; 77.150.01; 91.060.10; 91.060.20

English Version

Self-supporting metal sheet for roofing, external cladding and internal lining - Product specification and requirements

Plaques métalliques autoportantes pour couverture, bardages extérieur et intérieur et cloisons - Spécification de produit et exigences

Selbsttragende Dachdeckungs- und Wandbekleidungselemente für die Innen- und Außenanwendung aus Metallblech - Produktspezifikation und Anforderungen

This European Standard was approved by CEN on 28 November 2005.

CEN members are bound to comply with the CEN/CENELEC Internal Regulations which stipulate the conditions for giving this European Standard the status of a national standard without any alteration. Up-to-date lists and bibliographical references concerning such national standards may be obtained on application to the Central Secretariat or to any CEN member.

This European Standard exists in three official versions (English, French, German). A version in any other language made by translation under the responsibility of a CEN member into its own language and notified to the Central Secretariat has the same status as the official versions.

CEN members are the national standards bodies of Austria, Belgium, Cyprus, Czech Republic, Denmark, Estonia, Finland, France, Germany, Greece, Hungary, Iceland, Ireland, Italy, Latvia, Lithuania, Luxembourg, Malta, Netherlands, Norway, Poland, Portugal, Romania, Slovakia, Slovenia, Spain, Sweden, Switzerland and United Kingdom.

EUROPEAN COMMITTEE FOR STANDARDIZATION
COMITÉ EUROPÉEN DE NORMALISATION
EUROPÄISCHES KOMITEE FÜR NORMUNG

Management Centre: rue de Stassart, 36 B-1050 Brussels

© 2006 CEN All rights of exploitation in any form and by any means reserved worldwide for CEN national Members.

Ref. No. EN 14782:2006: E

Documents
Document Sharing Hub

Full document details: BS EN 14782:2006

Contents

Page

Foreword 4

1 Scope 5

2 Normative references 6

3 Terms and definitions 7

4 Requirements 7
4.1 Materials 7
4.2 Nominal thickness 7
4.3 Mechanical resistance 7
4.3.1 General 7
4.3.2 Resistance of roofing products to concentrated forces 8
4.4 Water permeability 8
4.5 Vapour and air permeability 8
4.6 Dimensional change 8
4.7 Dimensional tolerances 9
4.8 Durability 9
4.9 External fire performance 9
4.10 Reaction to fire 9
4.11 Release of regulated dangerous substances 9

5 Testing, assessment and sampling methods 9
5.1 External fire performance for roof covering products 9
5.1.1 Products deemed to satisfy the requirements for external fire performance 9
5.1.2 Products classified without the need for further testing (CWFT option) 10
5.1.3 Other products 10
5.2 Reaction to fire 10
5.2.1 Products satisfying the requirements for reaction to fire Class A1 without the need for testing 10
5.2.2 Products classified without the need for further testing (CWFT option) 10
5.2.3 Other products 10
5.3 Release of regulated dangerous substances 10

6 Evaluation of conformity 10
6.1 General 10
6.2 Initial type testing (ITT) 11
6.2.1 General 11
6.2.2 Sampling for ITT 13
6.3 Factory production control (FPC) 13
6.3.1 General 13
6.3.2 General requirements 15

7 Designation 17

8 Product marking 17

Annex A (normative) Multilayer coated steel sheet 18
A.1 General 18
A.2 Substrate material 18
A.3 Specific requirements 18
A.3.1 Minimum nominal values of thickness 18
A.3.2 Bituminous coating specification 18
A.3.3 Durability 19
A.4 Freedom from defects 19

Annex B (normative) Determination of resistance to concentrated forces 20

AVA Documents
Document Sharing Hub

Full document details: BS EN 14782:2006

B.1 Principle 20
B.2 Test spans 20
B.3 Test sheets 21
B.4 Test procedure 21
B.5 Number of tests and analysis of results 22
B.6 Acceptance criteria 23
B.7 Test report 24

Annex C (normative) Mounting and fixing conditions of the test specimen for reaction to fire testing 25
C.1 General 25
C.2 Mounting and fixing conditions 25
C.2.1 General 25
C.2.2 General configuration 25
C.2.3 Securing the overlap vertical joint 27
C.2.4 Standard assembly – Steel corner flashings 27
C.2.5 Alternative assembly – Corner flashings and seals 27
C.2.6 Test arrangement for reaction to fire test according to EN ISO 11925-2 (Ignitability test) 27
C.3 Direct and extended application of the fire test results according to EN 13823 28
C.3.1 General 28
C.3.2 Direct application: Systems with only one metal sheet (single skin system without insulation) 28
C.3.3 Direct application: Systems with two (profiled or flat) coated metal sheets (or one cassette plus one sheet) with an insulation between the two sheets (double skin system) 30
C.3.4 Extended application: Other insulated systems – General methodology 33

Annex ZA (informative) Clauses of this European Standard addressing the provisions of the EU Construction Products Directive 35
ZA.1 Scope and relevant characteristics 35
ZA.2 Procedures for the attestation of conformity of products 36
ZA.3 CE marking and labelling 38

Bibliography 41

Documents
Document Sharing Hub

Full document details: BS EN 14782:2006

Foreword

This European Standard (EN 14782:2005) has been prepared by Technical Committee CEN/TC 128 “Roof covering products for discontinuous laying and products for wall cladding”, the secretariat of which is held by IBN.

This European Standard shall be given the status of a national standard, either by publication of an identical text or by endorsement, at the latest by July 2006, and conflicting national standards shall be withdrawn at the latest by July 2006.

This European Standard has been prepared under a mandate given to CEN by the European Commission and the European Free Trade Association, and supports essential requirements of EU Directive(s).

For relationship with EU Directive(s), see informative Annex ZA, which is an integral part of this European Standard.

According to the CEN/CENELEC Internal Regulations, the national standards organizations of the following countries are bound to implement this European Standard: Austria, Belgium, Cyprus, Czech Republic, Denmark, Estonia, Finland, France, Germany, Greece, Hungary, Iceland, Ireland, Italy, Latvia, Lithuania, Luxembourg, Malta, Netherlands, Norway, Poland, Portugal, Romania, Slovakia, Slovenia, Spain, Sweden, Switzerland and United Kingdom.

Documents
Document Sharing Hub
Full document details: BS EN 14782:2006

1 Scope

This European Standard specifies the terminology, requirements and test methods for factory made self-supporting metal sheets and tiles (for non-structural applications) delivered in the form of manufactured pieces for roofing and wall cladding and lining.

This standard also covers ceiling (including internal metal sheet) and soffit applications and cassettes (see Figure 1).

This standard covers self-supporting copper, zinc, steel, aluminium and stainless steel sheet with or without coatings, e.g. metallic, organic, inorganic or multi-layer (see Annex A). A moisture retaining layer intended to reduce the fall of droplets coming from condensation may be present on the reverse side of the product.

This standard also includes rules for marking, labelling and evaluation of conformity.

This standard does not cover products for structural purposes, i.e. it does not cover products intended to contribute to the global or partial stability of the building structure by providing racking resistance or resistance to permanent static loads (excluding self-weight of the metal sheet).

Requirements concerning acoustical and thermal insulation properties are not considered in this standard.

This standard does not include calculation or design requirements with regards to the works, installation techniques or the performance of the installed products.

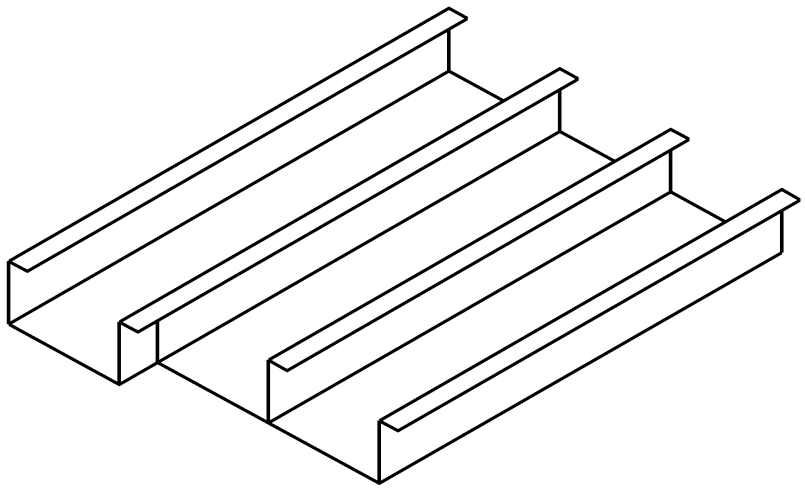

Figure 1 – Illustration of a cassette

Documents
Document Sharing Hub

Full document details: BS EN 14782:2006

2 Normative references

The following referenced documents are indispensable for the application of this European Standard. For dated references, only the edition cited applies. For undated references, the latest edition of the referenced document (including any amendments) applies.

EN 506:2000, *Roofing products from metal sheet - Specification for self-supporting products of copper or zinc sheet*

EN 508-1:2000, *Roofing products from metal sheet - Specification for self-supporting products of steel, aluminium or stainless steel sheet - Part 1: Steel*

EN 508-2:2000, *Roofing products from metal sheet - Specification for self-supporting products of steel, aluminium or stainless steel sheet - Part 2: Aluminium*

EN 508-3:2000, *Roofing products from metal sheet - Specification for self-supporting products of steel, aluminium or stainless steel sheet - Part 3: Stainless steel*

ENV 1187, *Test methods for external fire exposure to roofs*

EN 1427, *Bitumen and bituminous binders - Determination of softening point - Ring and Ball method*

EN 10002-1, *Metallic materials - Tensile testing - Part 1: Method of test at ambient temperature*

EN 10088-1, *Stainless steels - Part 1: List of stainless steels*

EN 10204, *Metallic products - Types of inspection documents*

EN 10326, *Continuously hot-dip coated strip and sheet of structural steels - Technical delivery conditions*

EN 13162, *Thermal insulation products for buildings - Factory made mineral wool (MW) products – Specification*

EN 13501-1, *Fire classification of construction products and building elements - Part 1: Classification using test data from reaction to fire tests*

EN 13501-5, *Fire classification of construction products and building elements - Part 5: Classification using data from external fire exposure to roof tests*

EN 13823, *Reaction to fire tests for building products - Building products excluding floorings exposed to the thermal attack by a single burning item*

EN ISO 6270-1, *Paints and varnishes - Determination of resistance to humidity - Part 1: Continuous condensation (ISO 6270-1:1998)*

EN ISO 6988, *Metallic and other non-organic coatings - Sulfur dioxide test with general condensation of moisture (ISO 6988:1985)*

EN ISO 9001:2000*, Quality management systems - Requirements (ISO 9001:2000)*

EN ISO 11925-2, *Reaction to fire tests - Ignitability of building products subjected to direct impingement of flame - Part 2: Single-flame source test (ISO 11925-2:2002)*

ISO 9227, *Corrosion tests in artificial atmospheres - Salt spray tests*

Documents
Document Sharing Hub

Full document details: BS EN 14782:2006

3 Terms and definitions

For the purposes of this European Standard, the terms and definitions given in EN 506:2000, EN 508-1:2000, EN 508-2:2000 and EN 508-3:2000 and the following apply.

3.1
base material
coated or non-coated flat sheet or strip (coil) of metal used for the production of a finished product according to this standard

4 Requirements

4.1 Materials

The materials for the self-supporting metal sheets specified in this European Standard shall be in accordance with the relevant material standards listed in EN 506, EN 508-1, EN 508-2 and EN 508-3.

4.2 Nominal thickness

The nominal thickness of the self-supporting metal sheet (excluding any organic, inorganic or multi-layer coating), as defined in the relevant material standards listed in EN 506, EN 508-1, EN 508-2 and EN 508-3, shall be equal to or greater than the values given in Table 1.

Table 1 — Minimum nominal values of thickness of self-supporting metal sheet excluding any organic, inorganic or multi-layer coating

Type of metal	Specified minimum nominal thickness [a] in mm
Aluminium	0,6 for roofing applications 0,4 for other applications
Copper	0,5
Stainless steel	0,4
Steel	0,4
Zinc	0,6
[a] Member States of use may require greater thickness than the value shown.	

4.3 Mechanical resistance

NOTE The suitability of a sheet for a given application should be determined by calculation or testing according to the specification applicable in the country of use, including the standards implementing the relevant European Standards.

4.3.1 General

The mechanical resistance shall be defined from the following aspects:

a) intended use, i.e. roof, wall, soffit, ceiling;

b) type of metal, i.e. aluminium, copper, stainless steel, steel, zinc;

c) nominal thickness of the metal sheet considering where applicable the class of tolerances as defined in EN 506, EN 508-1, EN 508-2 or EN 508-3;

AVA Documents
Document Sharing Hub

Full document details: BS EN 14782:2006

d) grade of metal in relation to its mechanical properties;

e) geometry of the product cross-section;

f) dimensional tolerances (see 4.7);

g) resistance of the roofing products to concentrated forces (see 4.3.2).

4.3.2 Resistance of roofing products to concentrated forces

The resistance of roofing products to concentrated forces shall be evaluated according to Annex B when subject to regulatory requirements and may be evaluated when not subjected to such requirements.

This requirement does not apply for ceiling and soffit products, internal lining and external cladding and cassettes.

Products intended for use at a span less than or equal to 400 mm, e.g. some tile profiles, are deemed to satisfy this requirement without the need for testing.

NOTE In this case, the support structure will determine the resistance to imposed forces.

4.4 Water permeability

As long as these products have no holes (as defects), they are water impermeable.

Where required, the absence of holes shall be checked by visual inspection of the finished product.

4.5 Vapour and air permeability

As long as these products have no holes (as defects), they are air and vapour impermeable.

Where required, the absence of holes shall be checked by visual inspection of the finished product.

4.6 Dimensional change

The thermal expansion shall be taken into account in the change of dimensions of the product, where this change may have an effect on the performance of the product, by stating the appropriate thermal expansion coefficient.

The following thermal expansion coefficient shall be used:

— Aluminium: $24 \times 10^{-6}\ K^{-1}$;

— Copper: $16{,}8 \times 10^{-6}\ K^{-1}$;

— Stainless steel: $10{,}0 \times 10^{-6}\ K^{-1} – 17{,}0 \times 10^{-6}\ K^{-1}$, depending on the grade, see EN 10088-1;

— Steel: $12 \times 10^{-6}\ K^{-1}$;

— Zinc: $22 \times 10^{-6}\ K^{-1}$;

unless the manufacturer demonstrates by appropriate means that more accurate values are applicable.

Documents
Document Sharing Hub
Full document details: BS EN 14782:2006

4.7 Dimensional tolerances

The dimensional tolerances specified for roof covering products in the applicable standard from the following: EN 506, EN 508-1, EN 508-2 and EN 508-3, shall not be exceeded.

For other products, the tolerances declared shall be appropriate, due account being taken of any national provisions in the country of use.

4.8 Durability

The manufacturer shall state the type, thickness and grade of metal and, if appropriate, type and thickness (or mass) and/or category of any coating(s) to enable users to select products which may be expected to provide the required durability of the product having regard to the expected environment and/or exposure conditions and feasibility of maintenance.

Where this is not appropriate, the durability of the product shall be determined in accordance with the technical specifications valid in the country of use.

4.9 External fire performance

Where the manufacturer wishes to make a declaration (e.g. when subject to regulatory requirements), the external fire performance of the products specified in this European Standard shall either be declared according to the provisions of 5.1 or be declared as Class F_{ROOF}.

4.10 Reaction to fire

Where the manufacturer wishes to make a declaration (e.g. when subject to regulatory requirements), the reaction to fire performance of the products specified in this European Standard shall either be declared according to the provisions of 5.2 or be declared as Class F.

4.11 Release of regulated dangerous substances

Where the manufacturer wishes to make a declaration (e.g. when subject to regulatory requirements), the release of regulated dangerous substances of the products specified in this European Standard shall be declared according to the provisions of 5.3.

5 Testing, assessment and sampling methods

5.1 External fire performance for roof covering products

5.1.1 Products deemed to satisfy the requirements for external fire performance

Products covered by this European Standard are considered "deemed to satisfy without the need for testing" in relation to the requirements for external fire performance provided that they meet the definitions given in Commission Decision 2000/553/EC [1], i.e. flat or profiled[1)] metal sheets of nominal thickness ≥ 0,4 mm with any external coating which is inorganic or has a gross calorific value, PCS ≤ 4,0 MJ/m^2 or a mass ≤ 200 g/m^2.

NOTE Individual Member States may have "deemed to satisfy" lists which go beyond the list given in the Commission Decision 2000/553/EC.

1) In this standard, the word "profiled" refers to the shape of the product and not the way it is manufactured.

AVA Documents
Document Sharing Hub

Full document details: BS EN 14782:2006

5.1.2 Products classified without the need for further testing (CWFT option)

The following products are considered to be classified in classes $B_{ROOF(t1)}$, $B_{ROOF(t2)}$ and $B_{ROOF(t3)}$ without further testing in accordance with Commission Decision 2005/403/EC: profiled steel sheets, flat steel sheets or panels of coil coated galvanised or zinc-aluminium alloy coated steel of metal thickness ≥ 0,40 mm with an organic external (weather side) coating and, optionally, a reverse (internal) side organic coating. The external coating is of a liquid-applied Plastisol paint of maximum nominal dry film thickness 0,200 mm, a PCS of not greater than 8,0 MJ/m^2 and a maximum dry mass of 330 g/m^2. The reverse side organic coating (if any) shall have a PCS of not greater than 4,0 MJ/m^2 and a maximum dry mass of 200 g/m^2.

5.1.3 Other products

Products not meeting the definitions as given in 5.1.1 or 5.1.2 shall be tested in accordance with the relevant method(s) in ENV 1187 and classified in accordance with EN 13501-5.

The products to be tested shall be installed, in addition to the general provisions given in ENV 1187, in a manner representative of their intended use.

5.2 Reaction to fire

5.2.1 Products satisfying the requirements for reaction to fire Class A1 without the need for testing

Non-organically coated products are considered to satisfy the requirements for performance Class A1 of the characteristic reaction to fire in accordance with the provisions of EC Decision 96/603, as amended, without the need for testing.

5.2.2 Products classified without the need for further testing (CWFT option)

Products with a polyester coating having a maximum nominal thickness of 25 µm and a PCS up to 1 MJ/m^2 (included) or a mass ≤ 70 g/m^2 are considered to satisfy the requirements for reaction to fire performance Class A1 without further testing in accordance with the relevant Commission Decision.

Products with a plastisol coating having a maximum nominal thickness of 200 µm and a PCS up to 7 MJ/m^2 (included) or a mass ≤ 300 g/m^2 are considered to satisfy the requirements for reaction to fire performance Class C-s3,d0 without further testing in accordance with the relevant Commission Decision.

5.2.3 Other products

Products not complying with the provisions of 5.2.1 or 5.2.2 shall be tested and classified in accordance with EN 13501-1.

When testing in accordance with the SBI test, the product shall be mounted according to Annex C.

5.3 Release of regulated dangerous substances

For products sold within the European Economic Area, see Annex ZA.

Products sold outside the European Economic Area shall conform to the relevant regulatory requirements on regulated dangerous substances valid in the country of use of the product.

6 Evaluation of conformity

6.1 General

The conformity of the products covered by this European Standard with the requirements of this standard and with the declared values (including classes) shall be demonstrated by:

Documents
Document Sharing Hub
Full document details: BS EN 14782:2006

— initial type testing comprising tests or other means of assessment;

— factory production control by the manufacturer.

For the purposes of testing, the products may be grouped into families where it is considered that the results for a given characteristic from any one product in the family are representative of all other products within that same family.

NOTE A family may be formed for only one characteristic or more than one characteristic. Products within one family for one characteristic may or may not be within the same family in respect of other characteristics.

6.2 Initial type testing (ITT)

6.2.1 General

Initial type testing shall be performed to show conformity with this standard.

Tests or assessments previously performed in accordance with the provisions of this standard (same product, same characteristic(s), test method, sampling procedure, system of attestation of conformity, etc.) may be taken into account to reduce the number of checks. In addition, initial type testing shall be performed at the beginning of the production of a new product type (unless a member of the same family) or at the beginning of a new method of production (where this may affect the stated properties) on the profile machine and/or the product itself.

Where the finished product manufacturer buys a base material whose characteristics have already been determined in accordance with the provisions of this standard and are declared by the base material supplier (e.g. following an inspection document conforming to EN 10204), these characteristics need not be reassessed in order to demonstrate conformity with this standard, provided that the production process for the finished product does not change these characteristics in an unfavourable way. ITT for the characteristics of the finished product related to the characteristics of the base material itself is given in Table 2 and may be assessed either by the base material supplier or the roofing/cladding product manufacturer. ITT for the other product characteristics is given in Table 3.

NOTE The profile process can increase locally the yield strength of the metal. Where the manufacturer uses this fact to claim a higher yield strength for the finished product, an initial type test will be required.

The base material may be presumed to have the performances stated of them by their supplier, although this does not replace the responsibility on the finished product manufacturer to ensure that only a base material having the correct values of characteristics to allow the finished roofing or cladding product to meet the requirements of this standard are used.

All characteristics in Clause 4 shall be subject to initial type testing, with the following exceptions:

— external fire performance when using the CWFT option, in accordance with 5.1.2 or when deemed to satisfy, in accordance with 5.1.1 (although measurement may be required to ensure that the product meets the definitions required for CWFT and deemed to satisfy),

— reaction to fire when using the CWFT option (although measurement may be required to ensure that the product meets the definition required for CWFT), in accordance with 5.2.2, or when deemed to satisfy Class A1, in accordance with 5.2.1,

— release of regulated substances may be assessed indirectly by controlling the content of the substance concerned.

Whenever a change occurs in the product, the base material or supplier of the components, or the production process (subject to the definition of a family), which could change significantly one or more of the characteristics, the type tests shall be repeated for the appropriate characteristic(s).

Documents
Document Sharing Hub

Full document details: BS EN 14782:2006

The results of all type tests shall be recorded and held by the manufacturer for at least 10 years after the end of production of the product to which they apply.

Table 2 — Test methods, number of specimens and conformity criteria for initial type testing of base material

Characteristic	Requirement clause	Test method	Minimum number of specimens		Compliance criteria and specific conditions
			Without base material manufacturer's inspection document [c] and/or traceability system [d]	With base material manufacturer's inspection document [c] and traceability system [e]	
Quality of the metal [a]	4.1	Visual inspection	1	1[b]	Manufacturer's declaration
Thickness	4.2	See 4.2	3	1[b]	Within the manufacturer's stated tolerance
Mechanical resistance Yield strength/grade of metal	4.3.1	EN 10002-1	3	1[b]	Manufacturer's declaration
Dimensional change	4.6	–	–	–	Manufacturer's declaration
Durability/quality of the coating	4.8	See 4.8	–	-	Declaration or compliance with appropriate national technical specification
Release of regulated dangerous substances	4.11	–	–	b	As appropriate when national provisions exist

[a] This concerns the quality of the base material (no pin-holes, micro holes, pits craters, etc.).

[b] In this case, the finished product manufacturer shall verify that the inspection document in accordance with EN 10204 indicates that the base material (e.g. coils, sheets) has the characteristics that he needs to produce the finished product.

[c] In accordance with EN 10204.

[d] These tests shall be done by the finished product manufacturer.

[e] These additional tests shall be done by the finished product manufacturer.

Documents
Document Sharing Hub
Full document details: BS EN 14782:2006