BRITISH STANDARD

BS EN 15312:2007 +A1:2010

Free access multi-sports equipment — Requirements, including safety, and test methods

ICS 97.220.40

NO COPYING WITHOUT BSI PERMISSION EXCEPT AS PERMITTED BY COPYRIGHT LAW

BSI Documents Document Sharing Hub British Standards

Full document details: BS EN 15312:2007+A1:2010

National foreword

This British Standard is the UK implementation of EN 15312:2007+A1:2010. It supersedes BS EN 15312:2007 which is withdrawn.

The start and finish of text introduced or altered by amendment is indicated in the text by tags. Tags indicating changes to CEN text carry the number of the CEN amendment. For example, text altered by CEN amendment A1 is indicated by ▶A1◀ ◀A1▶.

The UK participation in its preparation was entrusted to Technical Committee SW/65, Children's playground equipment.

A list of organizations represented on this committee can be obtained on request to its secretary.

This publication does not purport to include all the necessary provisions of a contract. Users are responsible for its correct application.

Compliance with a British Standard cannot confer immunity from legal obligations.

This British Standard was published under the authority of the Standards Policy and Strategy Committee on 31 October 2007

© BSI 2010

ISBN 978 0 580 67227 9

Amendments/corrigenda issued since publication

Date	Comments
31 October 2010	Implementation of CEN amendment A1:2010

Documents
Document Sharing Hub

Full document details: BS EN 15312:2007+A1:2010

EUROPEAN STANDARD

NORME EUROPÉENNE

EUROPÄISCHE NORM

EN 15312:2007+A1

September 2010

ICS 97.220.40

Supersedes EN 15312:2007

English Version

Free access multi-sports equipment - Requirements, including safety and test methods

Equipements sportifs en accès libre - Exigences, y compris de sécurité et méthodes d'essai

Frei zugängliche Multisportgeräte – Anforderungen, einschließlich Sicherheit und Prüfverfahren

This European Standard was approved by CEN on 23 December 2006 and includes Amendment 1 approved by CEN on 30 July 2010.

CEN members are bound to comply with the CEN/CENELEC Internal Regulations which stipulate the conditions for giving this European Standard the status of a national standard without any alteration. Up-to-date lists and bibliographical references concerning such national standards may be obtained on application to the CEN Management Centre or to any CEN member.

This European Standard exists in three official versions (English, French, German). A version in any other language made by translation under the responsibility of a CEN member into its own language and notified to the CEN Management Centre has the same status as the official versions.

CEN members are the national standards bodies of Austria, Belgium, Bulgaria, Croatia, Cyprus, Czech Republic, Denmark, Estonia, Finland, France, Germany, Greece, Hungary, Iceland, Ireland, Italy, Latvia, Lithuania, Luxembourg, Malta, Netherlands, Norway, Poland, Portugal, Romania, Slovakia, Slovenia, Spain, Sweden, Switzerland and United Kingdom.

EUROPEAN COMMITTEE FOR STANDARDIZATION
COMITÉ EUROPÉEN DE NORMALISATION
EUROPÄISCHES KOMITEE FÜR NORMUNG

Management Centre: Avenue Marnix 17, B-1000 Brussels

© 2010 CEN All rights of exploitation in any form and by any means reserved worldwide for CEN national Members.

Ref. No. EN 15312:2007+A1:2010: E

Documents
Document Sharing Hub

Full document details: BS EN 15312:2007+A1:2010

Contents

Page

Foreword 4
1 Scope 5
2 Normative references 5
3 Terms and definitions 6
4 General requirements 6
4.1 Materials 6
4.2 Structural integrity 7
4.3 Finish of equipment 8
4.4 Entrapment 9
4.4.1 Moving parts 9
4.4.2 Protection against entrapment 9
4.5 Protection against injuries due to movement 10
4.6 Connections 12
4.7 Consumable components (parts of wear and tear) 12
4.8 Wire ropes 12
4.9 Chains 12
4.10 Foundations 13
4.11 Accessibility 13
4.12 Removable elements 13
5 Specific requirements 13
5.1 General 13
5.2 Basketball equipment 13
5.2.1 Requirements 13
5.2.2 Safety requirements 19
5.3 Goals 20
5.3.1 General 20
5.3.2 Structural stability and integrity 21
5.4 Nets and net fixings 21
5.4.1 Nets 21
5.4.2 Net fixings 21
5.5 Multi-sports surround and ball stop screen 21
5.5.1 Multi-sports surround 21
5.5.2 Ball stop screen 22
5.6 Multi-function central nets and posts 22
5.7 Table tennis tables 22
6 Test methods 23
6.1 General test methods 23
6.2 Test methods specific to basketball equipment 23
6.2.1 Ring 23
6.2.2 Net 24
6.2.3 Rigidity 24
6.2.4 Stability 24
7 Test report 26
8 Information for users 26
9 Marking 26
10 Information provided by the supplier and/or the manufacturer 26
Annex A (normative) Loads 27
A.1 Permanent loads 27
A.1.1 General 27
A.1.2 Self weight 27
A.1.3 Prestressing loads 27
A.1.4 Mass of water 27

AVA Documents
Document Sharing Hub
Full document details: BS EN 15312:2007+A1:2010

A.2 Variable loads 27
A.2.1 General 27
A.2.2 User loads 28
A.2.3 Snow loads 30
A.2.4 Wind loads 30
A.2.5 Temperature loads 30
A.2.6 Seats: Specific loads 30
A.3 Numbers of users on the equipment 31
A.3.1 General 31
A.3.2 Number of users on a point 31
A.3.3 Number of users on line type elements 31
A.3.4 Number of users on an area 31

Annex B (normative) Method of calculation of structural integrity 33
B.1 General principles: Limit state 33
B.1.1 Limit state 33
B.1.2 Ultimate limit state 33
B.1.3 Serviceability limit state 34
B.2 Load combinations for static analysis 34
B.3 Worked example of the calculation of user loads (without safety factors) for a surround/barrier 34

Annex C (normative) Physical testing of structural integrity 36
C.1 Pass/fail criteria 36
C.1.1 Load carrying ability 36
C.1.2 Failure 36
C.2 Test load for equipment 36
C.2.1 Load combinations for testing 36
C.2.2 Safety factor for tests on identical series 36
C.2.3 Safety factor for tests on a unique product 37
C.3 Load application 37
C.3.1 Point loads 37
C.3.2 Line loads 37
C.3.3 Area loads 37

Annex D (normative) Test methods for entrapment 38
D.1 [A1⟩ General 38
D.2 Finger entrapment 38
D.2.1 Apparatus 38
D.2.2 Procedure 39
D.3 Head and neck entrapment 39
D.3.1 Completely bound openings 39
D.3.2 Partially bound and V-shaped openings ⟨A1] 41

Annex E (normative) Information to be provided by the supplier and/or manufacturer 48
E.1 Information provided by the manufacturer of equipment 48
E.1.1 General product information 48
E.1.2 Pre information 48
E.1.3 Installation information 48
E.1.4 Inspection and maintenance information 49

Annex F (normative) Test methods for resistance surround 51
F.1 Testing repeated impact resistance to footballs and kicks 51
F.2 [A1⟩ Impact resistance (very intense forceful kick from player) ⟨A1] 52

Bibliography 53

Documents
Document Sharing Hub
Full document details: BS EN 15312:2007+A1:2010

Foreword

This document (EN 15312:2007+A1:2010) has been prepared by Technical Committee CEN/TC 136 [A1] "Sports, playground and other recreational facilities and equipment" [A1], the secretariat of which is held by DIN.

This document shall be given the status of a national standard, either by publication of an identical text or by endorsement, at the latest by March 2011 and conflicting national standards shall be withdrawn at the latest by March 2011.

This document includes Amendment 1, approved by CEN on 2010-07-30.

This document supersedes EN 15312:2007.

The start and finish of text introduced or altered by amendment is indicated in the text by tags [A1] [A1].

Attention is drawn to the possibility that some of the elements of this document may be the subject of patent rights. CEN [and/or CENELEC] shall not be held responsible for identifying any or all such patent rights.

According to the CEN/CENELEC Internal Regulations, the national standards organizations of the following countries are bound to implement this European Standard: Austria, Belgium, Bulgaria, Croatia, Cyprus, Czech Republic, Denmark, Estonia, Finland, France, Germany, Greece, Hungary, Iceland, Ireland, Italy, Latvia, Lithuania, Luxembourg, Malta, Netherlands, Norway, Poland, Portugal, Romania, Slovakia, Slovenia, Spain, Sweden, Switzerland and United Kingdom.

Documents
Document Sharing Hub
Full document details: BS EN 15312:2007+A1:2010

1 Scope

This European Standard is applicable to free access multi-sports equipment and combinations intended for permanent installation (not temporary), which includes, but not exclusively, equipment for sports such as badminton, basketball, football, handball, hockey, table tennis, tennis, volleyball.

This European Standard specifies requirements, including safety, for the equipment itself as well as for its installation, inspection and maintenance. This European Standard is applicable to multi-sports equipment intended for individual and collective public use primarily by children and teenagers.

This type of equipment is not intended for use by very young children, e.g. less than 36 months.

This European Standard is not applicable to playground equipment as defined in EN 1176-1, free access facilities used for roller sports equipment (see EN 14974), fitness trails, artificial climbing structures (see ▌A1⟩ EN 12572-1, EN 12572-2 and EN 12572-3 ⟨A1▌).

This European Standard does not deal with beach equipment, the ground surfaces the local environment and any feature outside the multi-sports equipment.

This European Standard does not include any specific requirements other than for access and egress for disabled users.

2 Normative references

The following referenced documents are indispensable for the application of this document. For dated references, only the edition cited applies. For undated references, the latest edition of the referenced document (including any amendments) applies.

▌A1⟩ EN 636, *Plywood — Specifications* ⟨A1▌

▌A1⟩ EN 1176-1:2008 ⟨A1▌, *Playground equipment and surfacing — Part 1: General safety requirements and test methods*

EN 1271, *Playing field equipment — Volleyball equipment — Functional and safety requirements, test methods*

EN 1991-1-3, *Eurocode 1 — Actions on structures — Part 1-3: General actions — Snow loads*

EN 1991-1-4, *Eurocode 1: Actions on structures — Part 2-4: General actions — Wind actions*

EN 1991-1-5, *Eurocode 1: Actions on structures — Part 1-5: General actions — Thermal actions*

▌A1⟩ *deleted text* ⟨A1▌

EN ISO 1806, *Fishing nets — Determination of mesh breaking force of netting (ISO 1806:2002)*

EN ISO 2062, *Textiles — Yarns from packages —* ▌A1⟩ *Determination of single-end breaking force and elongation at break using constant rate of extension (CRE) tester (ISO 2062:2009)* ⟨A1▌

EN ISO 2307, *Fibre ropes — Determination of certain physical and mechanical properties (ISO 2307:2005)*

ISO 8793, *Steel wire ropes — Ferrule secured eye terminations*

Documents
Document Sharing Hub
Full document details: BS EN 15312:2007+A1:2010

3 Terms and definitions

For the purposes of this document, the following terms and definitions apply.

3.1
free access multi-sports equipment
equipment with which it is possible to practice one or more-sports where the access to the facilities is neither regulated nor necessarily supervised

3.2
goal
defined opening or area which forms the target for ball games, usually comprising two uprights and one crossbar

NOTE The net is optional.

3.3
basketball equipment
equipment comprising the following components: one backboard-one ring; the supporting frame; stability devices

NOTE The net is optional.

3.4
multi-sports surround
element surrounding the area where ball games are played and which is designed to limit the motion of the user and/or the area of play

NOTE A multi-sports surround is e.g. a fence or a ball rebound wall; ball games are e.g. hockey, football.

3.5
ball stop-screen
flexible or rigid fence or screen for restricting a ball from going in a specific direction

NOTE It is important that the location of the area of play accounts for the risks of balls leaving it. If the area of play is located next to a road, a ball stop screen may minimize the risk of players having to recover the ball from the road. It is equally important that other activities (e.g. playground area, artificial climbing structure) are protected from ball impact.

4 General requirements

4.1 Materials

Materials ⟨A1⟩ shall ⟨A1⟩ be selected and protected such that the structural integrity of the equipment manufactured from them is not affected before the next relevant maintenance inspection.

NOTE The provisions relating to certain materials in this European Standard do not imply that other equivalent materials are unsuitable in the manufacture of multi-sports equipment.

The selection of materials and their use should be in accordance with the appropriate European Standards where applicable.

Particular care should be taken in the choice of materials where equipment is to be used in extreme climatic or atmospheric conditions.

Where very low or very high temperatures can be anticipated care should be taken with material selection to avoid possible hazards through direct skin contact.

⟨A1⟩ In the choice of a material or substance for equipment, consideration should be given to the eventual disposal of the material or substance having regard to any possible environmental toxic hazard. ⟨A1⟩

Documents
Document Sharing Hub
Full document details: BS EN 15312:2007+A1:2010

A1 NOTE Information on the identification and classification of such substances can be found in the Directive 67/548/EEC (classification, packaging and labelling of dangerous substances) [10] as well as in the Regulation (EC) no.1907/2006 of the European Parliament and of the Council of 18 December 2006 concerning the Registration, Evaluation, Authorisation and Restriction of Chemicals (REACH) [11]. A1

4.2 Structural integrity

Structural integrity of the equipment, including stability, shall be assessed by one of the following unless otherwise stated in Clause 5:

a) calculation, carried out in accordance with Annexes A and B,

b) physical testing, in accordance with Annex C, or

c) a combination selected from either a) or b).

When calculations are carried out in accordance with Annex B, no limit states shall be exceeded at combinations of loads as given in B.2.

When tested in accordance with Annex C, the equipment shall not show any cracks, damage or excessive permanent deformation.

For some equipment, these specific calculations or tests are not always appropriate, but the structural integrity shall be at least equivalent.

For a family of products, the structural integrity for the worst case of the intended combinations shall be proved.

Each structure shall resist both the permanent and variable loads acting on equipment and parts of equipment as described in Annex C.

NOTE 1 No allowance for accidental loads, i.e. loads produced by fire, collision by vehicles or earthquake, need to-be made for multi-sports equipment.

NOTE 2 The loads associated with fatigue are in general much smaller than the loads in combination with the appropriate load factors when calculated according to B.2. Therefore, the equipment does not need to be verified for fatigue, in general.

Structural parts shall resist the worst case loading condition.

NOTE 3 In order to achieve this, it can be necessary to remove that part of the user load causing favourable effects, as shown in Figure 1.

Documents
Document Sharing Hub
Full document details: BS EN 15312:2007+A1:2010

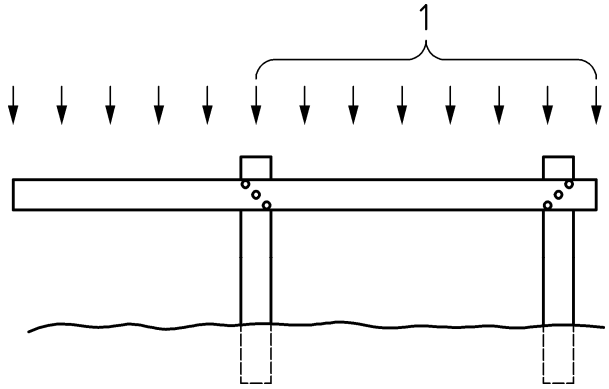

Key
1 part of the load to be removed because of favourable effects

Figure 1 — Example of removal of that part of the user load which causes a favourable effect

4.3 Finish of equipment

Wooden equipment shall be made of wood with a low susceptibility to splintering. The surface finish of equipment made of other materials (e.g. glass fibre) shall be non-splintering.

Rough surfaces should not present any risk of injury.

There shall be no protruding nails, projecting wire, rope terminations or pointed or hard and sharp-edged parts within any accessible part of the equipment. Corners, edges and projecting parts within any accessible part of the equipment that project more than 8 mm, and which are not shielded by adjacent areas that are not more than 25 mm from the end of the projecting part, shall be rounded off. The minimum radius of the curve shall be 3 mm.

Protruding bolt threads within any accessible part of the equipment shall be permanently covered, e.g. dome-headed nuts. Nuts and bolt heads that project less than 8 mm shall be free from burrs. All welds shall be ground smooth.

NOTE Figure 2 shows examples of protection for nuts and bolts.

Dimensions in millimetres

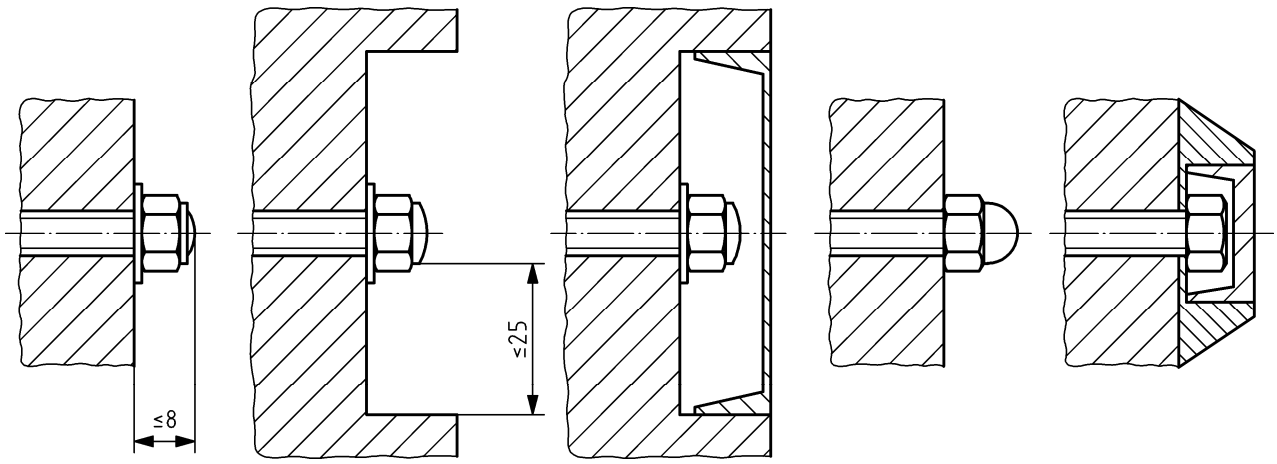

Figure 2 — Examples of protection for nuts and bolts

Documents
Document Sharing Hub
Full document details: BS EN 15312:2007+A1:2010

4.4 Entrapment

4.4.1 Moving parts

There shall be no crushing points or shearing points between moving and/or stationary parts of the equipment in accordance with 4.4.2.

4.4.2 Protection against entrapment

4.4.2.1 Entrapment of the head and neck

4.4.2.1.1 General

Equipment shall be constructed so that any openings do not create head and neck entrapment hazards either by head first or feet first passage. Hazardous situations in which this type of entrapment can be encountered include the following:

a) completely bound openings through which a user may slide feet first or head first,

b) partially bound or V-shaped openings and

c) other openings (e.g. shearing or moving openings).

4.4.2.1.2 Completely bound openings

Accessible completely bound openings with a lower edge more than 600 mm above ground shall be tested in accordance with D.3.1

Small probes n°1 and n°2 shall not pass through any opening unless it also allows the passage of large probe n°3.

Non-rigid parts (e.g. ropes) shall not overlap if this creates apertures that are not in accordance with the above.

4.4.2.1.3 Partially bound and V-shaped openings

Partially bound and V-shaped openings with an entrance at 600 mm or more above the ground shall be constructed so that either:

a) the opening is not accessible when tested in accordance with D.3.2, or

b) if accessible at a position of 600 mm or more above ground when tested in accordance with D.3.2,

depending on the angular orientation range of the opening (see Figure D6a), shall comply with the following:

— Range 1: (template centre line ± 45° from vertical); the template apex contacts the base of the opening and the depth of the opening is less than the length of the template to the underside of the shoulder section.

— [A1⟩ Range 2: (template centre line from horizontal to + 45°); when the template apex contacts the base of the opening, the depth of the opening shall be less than the ‘A’ portion of the template. If the depth of the opening is greater than the ‘A’ portion of the template all parts of the opening above the ‘A’ portion shall also allow insertion of the shoulder section of the template or probe n°3. ⟨A1]

— Range 3: no template test requirements.

Documents
Document Sharing Hub
Full document details: BS EN 15312:2007+A1:2010

4.4.2.2 Entrapment of finger

[A1] Equipment should be constructed so that the following hazardous situations, which might cause entrapment are not created: [A1]

a) [A1] gaps in which fingers can be trapped whilst the remainder of the body is moving or continues in forced movement, [A1]

b) open-ended tubes or pipes, and

c) variable gaps (excluding chains).

[A1] *deleted text* [A1]

Openings and holes which have a lower edge more than [A1] 1 000 mm [A1] above the playing surface, when tested in accordance with D.2, shall conform to the following requirements:

a) the 8 mm finger rod (see Figure D.1) shall not pass through the minimum cross-section of the opening and the profile of the opening shall be such that the rod cannot be locked in any position when set in motion as given in D.2.2, or

b) if the 8 mm finger rod passes through the opening, the 25 mm finger rod (see Figure D.1) shall also pass through the opening, provided that the opening does not permit access to another finger entrapment site.

The ends of tubes and pipes shall be closed off to prevent the risk of finger entrapment.

The closures shall not be removable without using tools.

Gaps whose dimensions change during use of the equipment shall have a minimum dimension in any position of 18 mm.

4.5 Protection against injuries due to movement

The space in, on or around the equipment that can be occupied by the user shall not contain any obstacles that the user is not likely to expect and which could cause injuries if hit by the user (see Figure 3). Examples of expected obstacles, such as anti-cycle bars (which may be removable to allow wheel chair access), are excluded from this requirement (see Figure 4).

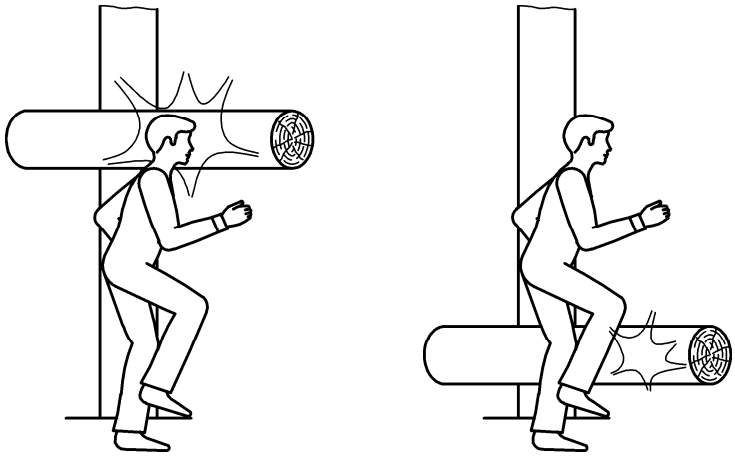

Figure 3 — Examples of unexpected obstacles

Documents
Document Sharing Hub
Full document details: BS EN 15312:2007+A1:2010

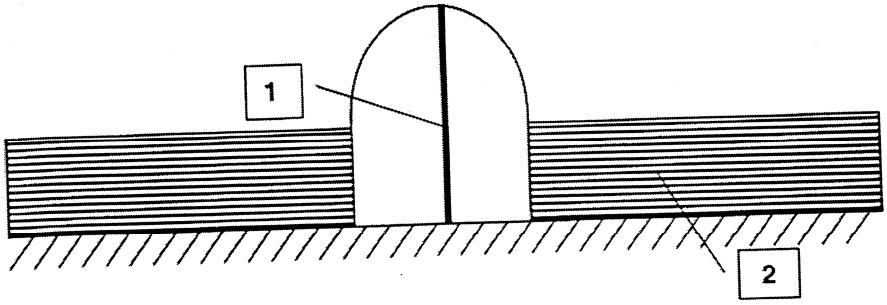

[A1] a) Front view [A1]

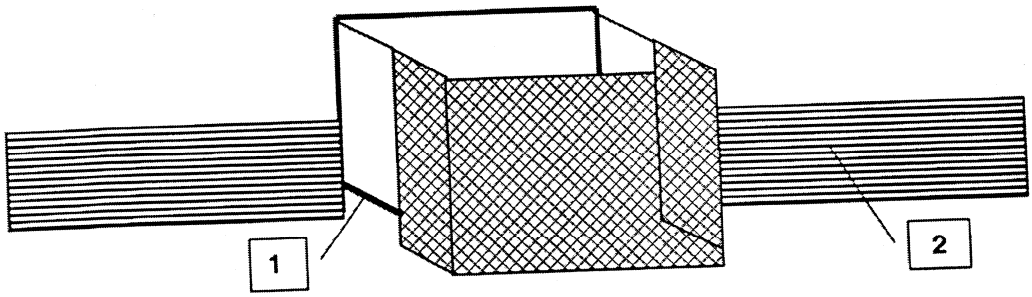

[A1] b) Back view [A1]

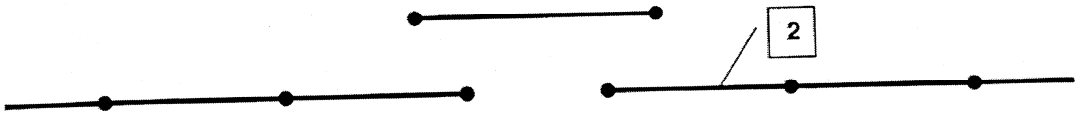

[A1] c) Top view [A1]

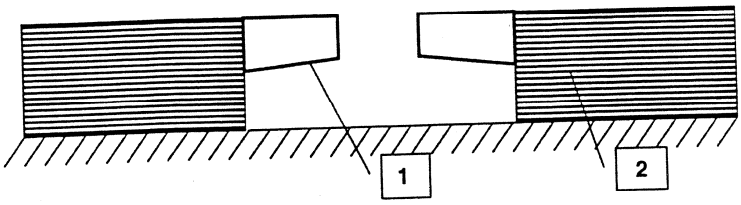

[A1] d) Front view [A1]

Key
1 anti-cycle bar
2 multi-sports surround

Figure 4 — Examples of expected obstacles

Documents
Document Sharing Hub
Full document details: BS EN 15312:2007+A1:2010

4.6 Connections

Connections shall be secured such that they cannot come loose of there own accord unless specifically designed to do so.

Connections shall be safeguarded so that they cannot be undone without tools.

4.7 Consumable components (parts of wear and tear)

Components subjected to wear or designed to be renewed during the life of the equipment, for example bearings, shall be capable of being replaced.

Replaceable components should be protected against an unauthorised intervention and should require little maintenance. Any lubricants leaking out should not soil the equipment or adversely affect its safe use.

4.8 Wire ropes

Wire ropes shall be made from galvanized or corrosion-resistant wire.

Ferrules shall conform to ISO 8793 and the rope end shall coincide with the edge of the grip. Accessible wire rope clips, the thread ends of which protrude more than 8 mm, shall only be used outside the playing area or shall be covered by suitable means.

Turnbuckles shall have two closed loops-and shall be made from corrosion-resistant material. It shall not be possible to undo turnbuckles without a tool.

Figure 5 shows examples of ferrules and turnbuckles.

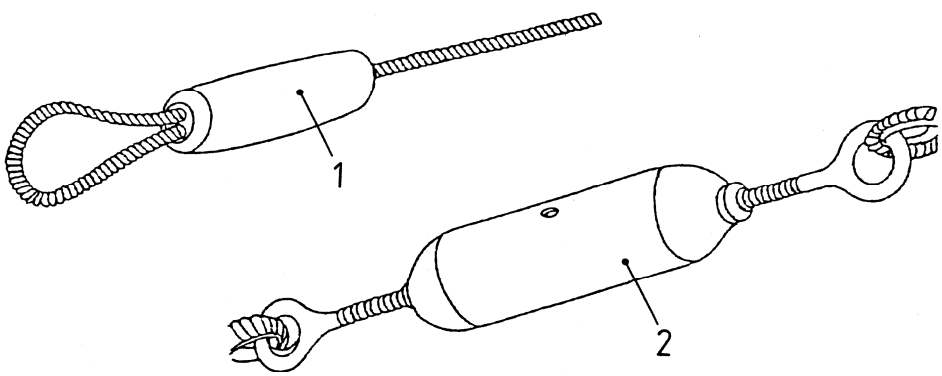

Key
1 ferrule
2 turnbuckle

Figure 5 — Examples of ferrules and turnbuckles

4.9 Chains

Chains shall have a maximum opening of 8,6 mm in any one direction except where connections are made, where the maximum opening shall be greater than 18 mm or less than 8,6 mm.

Documents
Document Sharing Hub
Full document details: BS EN 15312:2007+A1:2010

4.10 Foundations

The foundations shall be designed such that they do not present a hazard (tripping, impact). Care should be taken to ensure that foundations are not exposed as a result of erosion.

4.11 Accessibility

[A1⟩ Any part of multi-sports equipment where the user is encouraged to access (e.g. play elements such as ladders, climbing walls) to an elevated surface above 1 000 mm height is classified as a play structure and shall comply with the requirements 4.2.4 "protection against falling", 4.2.8 "protection against injuries during movement and falling" and 4.2.7.3 "entrapment of clothing/hair" of EN 1176-1:2008, 4.2.4 "Protection against falling", 4.2.8 "Protection against injuries during movement and falling" and 4.2.7.3 "Entrapment of clothing/hair". ⟨A1]

When an elevated surface abuts a multi-sports area as a spectator platform for visibility of multi-sports activities, no impact attenuating surface is required within the multi-sports area if a barrier of [A1⟩ 2 000 mm ⟨A1] minimum height is provided. The requirements for impact attenuating surface apply to the remaining sides of the elevated surface.

NOTE The barrier is intended to prevent users gaining access to the multi-sports area either over the top or to the side of the barrier.

4.12 Removable elements

If the equipment includes any elements that are designed to be removable (e.g. post, exchange of individual parts of equipment), any cavities or holes left in the surface shall be suitably covered to ensure continuity of the playing surface.

5 Specific requirements

5.1 General

Equipment shall comply with general requirements of this European Standard except in so far as they are modified by this section.

5.2 Basketball equipment

5.2.1 Requirements

5.2.1.1 Classification

Basketball equipment shall be classified by the design (types), the free space and typical performance criterion (classes) as shown in Tables 1 and 2.

NOTE This classification is in line with EN 1270.

Table 1 — Types

Type	Description	Example
1	fixed wall mounted	Figure 6
2	removable with sockets	Figure 7
3	fixed in the ground	Figure 8
4	combined basketball goal	Figure 13

AVA Documents
Document Sharing Hub

Full document details: BS EN 15312:2007+A1:2010

Table 2 — Classes

Dimensions in millimetres

Class	Free space ℓ (see Figure 9) min.
A	3 250
B	2 250
C	1 650
D	1 200
E	$600 \leq \ell \leq 1\ 200$)

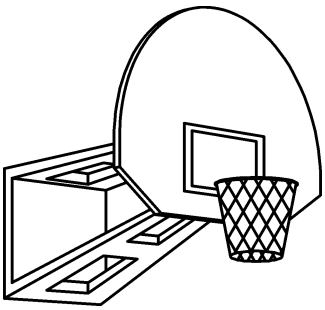

Figure 6 — Example of type 1

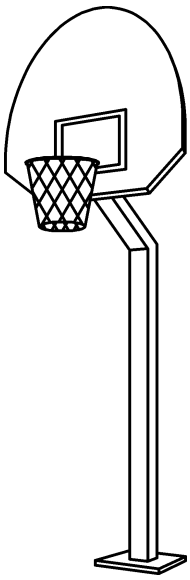

Figure 7 — Example of type 2

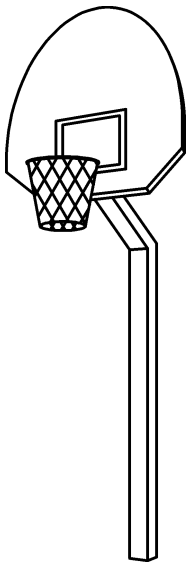

Figure 8 — Example of type 3

Documents
Document Sharing Hub
Full document details: BS EN 15312:2007+A1:2010

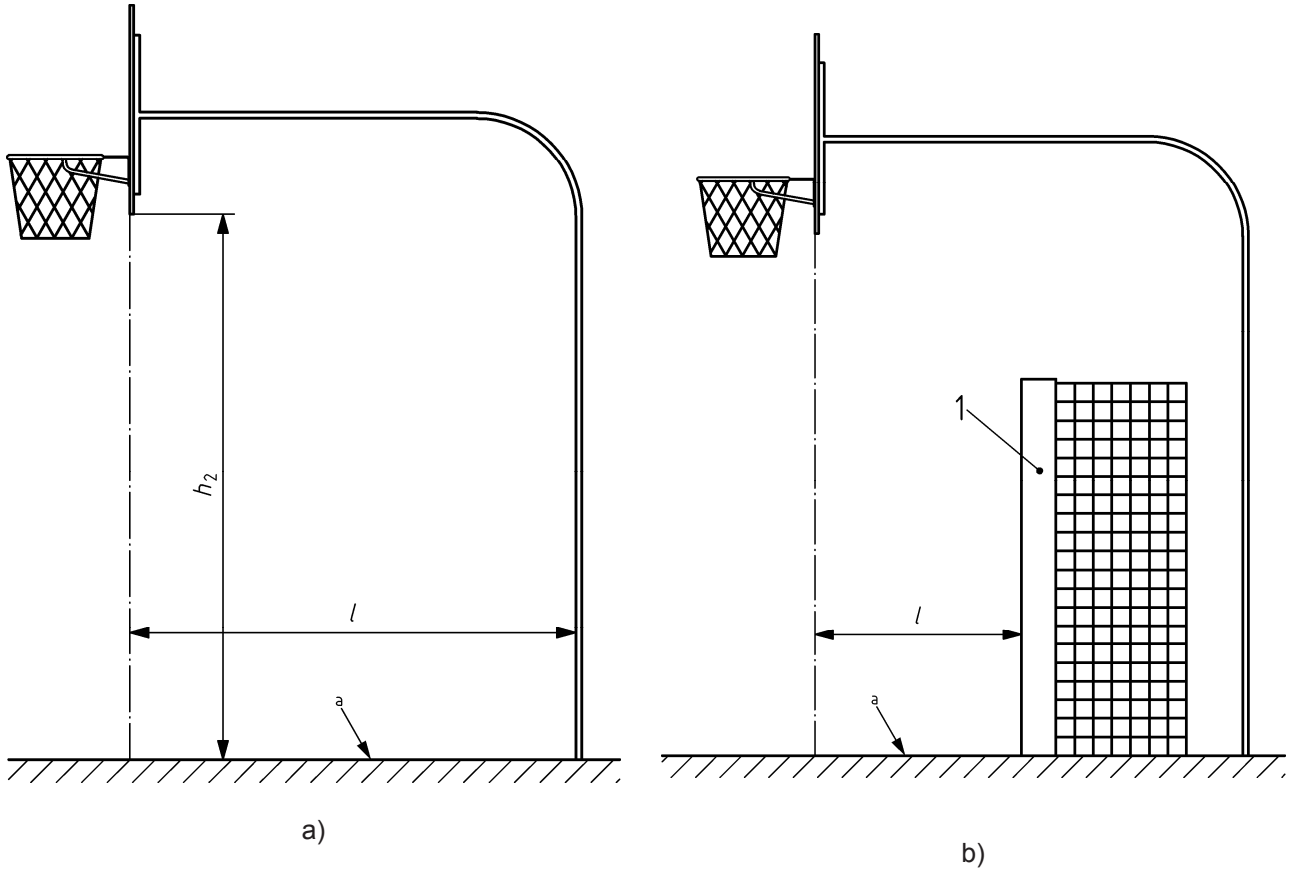

Key

l free space

a end line of playing court

1 goal

Figure 9 — Examples of free space, for simple or combined equipment

Documents
Document Sharing Hub
Full document details: BS EN 15312:2007+A1:2010