BS EN 15700:2011

BSI Standards Publication

Safety for conveyor belts for winter sport or leisure use

NO COPYING WITHOUT BSI PERMISSION EXCEPT AS PERMITTED BY COPYRIGHT LAW

raising standards worldwide™

Full document details: BS EN 15700:2011

National foreword

This British Standard is the UK implementation of EN 15700:2011.

The UK participation in its preparation was entrusted to Technical Committee MCE/20, Aerial ropeways.

A list of organizations represented on this committee can be obtained on request to its secretary.

This publication does not purport to include all the necessary provisions of a contract. Users are responsible for its correct application.

© BSI 2011

ISBN 978 0 580 58982 9

ICS 45.100; 91.140.90

Compliance with a British Standard cannot confer immunity from legal obligations.

This British Standard was published under the authority of the Standards Policy and Strategy Committee on 30 November 2011.

Amendments issued since publication

Date	Text affected

Documents
Document Sharing Hub

Full document details: BS EN 15700:2011

EUROPEAN STANDARD

NORME EUROPÉENNE

EUROPÄISCHE NORM

EN 15700

October 2011

ICS 91.140.90

English Version

Safety for conveyor belts for winter sport or leisure use

Sécurité des tapis roulants pour les activités de sports d'hiver ou de loisirs

Sicherheit von Bandförderern für Wintersport- oder Freizeitaktivitäten

This European Standard was approved by CEN on 3 September 2011.

CEN members are bound to comply with the CEN/CENELEC Internal Regulations which stipulate the conditions for giving this European Standard the status of a national standard without any alteration. Up-to-date lists and bibliographical references concerning such national standards may be obtained on application to the CEN-CENELEC Management Centre or to any CEN member.

This European Standard exists in three official versions (English, French, German). A version in any other language made by translation under the responsibility of a CEN member into its own language and notified to the CEN-CENELEC Management Centre has the same status as the official versions.

CEN members are the national standards bodies of Austria, Belgium, Bulgaria, Croatia, Cyprus, Czech Republic, Denmark, Estonia, Finland, France, Germany, Greece, Hungary, Iceland, Ireland, Italy, Latvia, Lithuania, Luxembourg, Malta, Netherlands, Norway, Poland, Portugal, Romania, Slovakia, Slovenia, Spain, Sweden, Switzerland and United Kingdom.

EUROPEAN COMMITTEE FOR STANDARDIZATION
COMITÉ EUROPÉEN DE NORMALISATION
EUROPÄISCHES KOMITEE FÜR NORMUNG

Management Centre: Avenue Marnix 17, B-1000 Brussels

© 2011 CEN All rights of exploitation in any form and by any means reserved worldwide for CEN national Members.

Ref. No. EN 15700:2011: E

Documents
Document Sharing Hub

Full document details: BS EN 15700:2011

Contents

Page

Foreword 4
Introduction 5
1 Scope 6
2 Normative references 6
3 Terms and definitions 7
4 List of significant hazards 8
4.1 General safety principles 8
4.2 List of significant risks 8
4.2.1 Mechanical risks 8
4.2.2 Electrical risks 8
4.2.3 Thermal risks 9
4.3 List of hazardous situations or danger factors 9
5 Safety requirements and/or protective measures 10
5.1 General 10
5.2 Adaptation of the travelator to the terrain 10
5.2.1 Installation of the travelator 10
5.2.2 Layout 10
5.2.3 Longitudinal profile 10
5.2.4 Cross-section 13
5.2.5 Belt speed 15
5.3 Design requirements relating to the belt and its accessories 16
5.3.1 Belt 16
5.3.2 Guides 16
5.3.3 Covering 16
5.3.4 Elimination of risk of injury 17
5.3.5 Safety flap 17
5.3.6 Drum or wheel at the unloading station 17
5.4 Drive and start-up of the travelator 17
5.4.1 General 17
5.4.2 Drive 18
5.4.3 Start-up 18
5.5 Operating safety requirements 18
5.5.1 Operating safety principles 18
5.5.2 Travelator stops 20
5.5.3 Safety devices and functions 21
5.5.4 Monitoring of the belt re-entry angle at the unloading point 23
5.5.5 Necessary conditions for automatic re-starting after a stop 26
5.5.6 Device for checking the correct position of the emergency flap 27
5.5.7 Device for checking for belt rupture 27
5.5.8 Device for checking the correct position of the non-return device 27
5.5.9 Device for checking the correct position of the brakes 27
5.5.10 Travelator on which passengers or third parties may not cross the belt re-entry point at the unloading point 27
5.6 Control elements 28
5.6.1 Controls 28
5.6.2 Secondary control panel 29
5.6.3 Resetting 29
5.6.4 Alarm 29
5.7 Protection of property and people 29

Documents
Document Sharing Hub
Full document details: BS EN 15700:2011

5.7.1 Safety of personnel and passengers 29
5.7.2 Protection of the installations 29
5.7.3 Main switch 30
5.7.4 Locking the installation 30
5.7.5 Protection against electrical currents and atmospheric electrical discharges 30
5.8 Calculations and justifications 30
5.8.1 Calculations 30
5.8.2 Justification of materials 31

6 Verification of the safety requirements and/or protective measures 32
6.1 General 32
6.2 Verifications during the design/construction phase 32
6.3 Verifications at the installation site 32

7 User information 38
7.1 General 38
7.2 Signage 38
7.3 Accompanying documents (Instructions) 39
7.3.1 General 39
7.3.2 Assembly instructions 39
7.3.3 Instructions for use and maintenance 39
7.4 Marking 40

Annex A (normative) **Safety function requirement classes** 41

Annex B (informative) **Signage** 42

Annex ZA (informative) **Relationship between this European Standard and the Essential Requirements of EU Machinery Directive 2006/42/EC** 45

Bibliography 46

Documents
Document Sharing Hub

Foreword

This document (EN 15700:2011) has been prepared by Technical Committee CEN/TC 242 “Safety requirements for passenger transportation by cable”, the secretariat of which is held by AFNOR.

This European Standard shall be awarded the status of national standard, either by publication of an identical text or by endorsement, at the latest by April 2012, and conflicting national standards shall be withdrawn at the latest by April 2012.

Attention is drawn to the possibility that some of the elements of this document may be the subject of patent rights. CEN [and/or CENELEC] shall not be held responsible for identifying any or all such patent rights.

This document has been prepared under a mandate given to CEN by the European Commission and the European Free Trade Association, and supports essential requirements of the EU Directive(s).

For the relationship with the EU Directive, see informative Annex ZA, which is an integral part of this document.

According to CEN/CENELEC Internal Regulations, the national standards organizations of the following countries are bound to implement this European Standard: Austria, Belgium, Bulgaria, Cyprus, Croatia, the Czech Republic, Denmark, Estonia, Finland, France, Germany, Greece, Hungary, Ireland, Iceland, Italy, Latvia, Lithuania, Luxembourg, Malta, Norway, the Netherlands, Poland, Portugal, Romania, Slovakia, Slovenia, Spain, Sweden, Switzerland and the United Kingdom.

Documents
Document Sharing Hub

Full document details: BS EN 15700:2011

Introduction

This European Standard is a type C standard as stated in EN ISO 12100:2010.

The travelators covered and the range of hazardous phenomena and situations and dangerous events covered are indicated in the scope of this document.

When provisions of this type C standard are different from those which are stated in type A or B standards, the provisions of this type C standard take precedence over the provisions of the other standards, for travelators that have been designed and built according to the provisions of this type C standard.

AVA Documents
Document Sharing Hub
Full document details: BS EN 15700:2011

1 Scope

This European Standard is applicable for travelators for leisure or winter sports use.

These requirements are applicable to travelators for the transport of passengers wearing snow-sliding devices or pedestrians wearing ski boots or heavy boots who may be carrying their snow-sliding devices for winter sports activities. For other uses, users shall wear suitable (enclosed and solid) footwear for travelators.

NOTE Snow-sliding devices include seated ski equipment for handicapped people.

This European Standard has been prepared on the basis of the automatic operation of these installations with no staff permanently present at the actual installation.

It covers requirements relating to the prevention of accidents and the safety of workers.

This European Standard covers all the significant hazards, hazardous situations and hazardous events specific to travelators, for leisure or winter sports activities, when they are used in conformity with the application for which they are intended, as well as for inappropriate applications which could be reasonably foreseeable by the manufacturer (see Clause 4).

This European Standard does not apply either to moving walks as specified in EN 115 or to loading bands as specified in EN 1907.

This European Standard does not apply to travelators manufactured prior to the date of its publication as an EN.

2 Normative references

The following reference documents are indispensible for the application of this document. For dated references, only the edition cited applies. For undated references, the latest edition of the referenced document (including any amendments) applies.

EN 115-1, *Safety of escalators and moving walks — Part 1: Construction and installation*

EN 619:2002, *Continuous handling equipment and systems — Safety and EMC requirements for equipment for mechanical handling of unit loads*

EN 953, *Safety of machinery — Guards — General requirements for the design and construction of fixed and movable guards*

EN 981, *Safety of machinery — System of auditory and visual danger and information signals*

EN 1037, *Safety of machinery — Prevention of unexpected start-up*

EN 1088, *Safety of machinery — Interlocking devices associated with guards — Principles for design and selection*

EN 1907:2005, *Safety requirements for cableway installations designed to carry persons — Terminology*

EN 1993-1-1, *Eurocode 3: Design of steel structures — Part 1-1: General rules and rules for buildings*

EN 60204-1, *Safety of machinery — Electrical equipment of machines — Part 1: General requirements*

Documents
Document Sharing Hub

Full document details: BS EN 15700:2011

EN 60204-11, *Safety of machinery — Electrical equipment of machines — Part 11: Requirements for HV equipment for voltages above 1 000 V a.c. or 1 500 V d.c. and not exceeding 36 kV*

EN 60947-5-1, *Low-voltage switchgear and control gear — Part 5-1: Control circuit devices and switching elements — Electromechanical control circuit devices*

EN 61496-1, *Safety of machinery — Electro-sensitive protection equipment — Part 1: General requirements and tests*

EN 61508-1, *Functional safety of electrical/electronic/programmable electronic safety-related systems — Part 1: General requirements* (IEC 61508-1:2010)

EN ISO 7731, *Ergonomics — Danger signals for public and work areas — Auditory danger signals (ISO 7731:2003)*

EN ISO 12100:2010, *Safety of machinery — General principles for design — Risk assessment and risk reduction (ISO 12100:2010)*

EN ISO 13849-1, *Safety of machinery — Safety-related parts of control systems — Part 1: General principles for design (ISO 13849-2:2006)*

EN ISO 13849-2, *Safety of machinery — Safety-related parts of control systems — Part 2: Validation (ISO 13849-2:2003)*

EN ISO 13850, *Safety of machinery — Emergency stop — Principles for design (ISO 13850:2006)*

EN ISO 13857, *Safety of machinery — Safety distances to prevent hazard zones being reached by upper and lower limbs (ISO 13857:2008)*

3 Terms and definitions

For the purposes of this document, the terms and definitions given in EN ISO 12100:2010, EN 1907:2005, EN 619:2002 and the following apply.

3.1
travelator
continuous transport installation used for leisure or winter sporting activities, comprising an electrically driven moving belt on which the passengers are transported standing up

NOTE This belt may be either continuous or modular

3.2
drum
continuous belt travelator component used to drive or return the belt

3.3
wheel
modular belt travelator component used to drive or return the belt

3.4
safety function
all the operations intended to recognize the occurrence of certain states or specific events constituting a dangerous situation. These operations initiate the processes intended to reduce the risks, in particular stopping the installation. A safety function starts by recognizing the conditions and evaluating the physical parameters on the travelator. It ends with initiating the process or with the completion of what has been initiated

Documents
Document Sharing Hub
Full document details: BS EN 15700:2011

3.5
electrical safety device
assemblage of components which carry out all the operations of a safety function

3.6
break circuit
circuit through which a permanent current normally flows. The desired function is initiated by interrupting the current flow

3.7
safety circuits
circuits on which the safety functions and emergency stopping devices act directly or which monitor the physical parameters relevant to safety and, if required, compare them, and which stop the travelator or prevent it from unexpectedly starting up

4 List of significant hazards

4.1 General safety principles

This clause contains all the significant hazards, hazardous situations or hazardous events that are covered by this standard and which, on the basis of a risk analysis, have been identified as being significant for this type of machinery and require action to be taken to eliminate or reduce the risk.

These actions are then described in the form of requirements in the remainder of this standard.

The hazards have been listed on the basis of EN ISO 14121-1.

Account is taken of a passenger falling so that it does not lead to a hazardous situation.

4.2 List of significant risks

4.2.1 Mechanical risks

— Injury through falling onto the travelator or from the travelator;

— injury through passengers colliding with each other;

— injury through colliding with the components of the travelator or obstacles situated within the travelator environment;

— injury through cutting or shearing;

— injury of a third party against the travelator;

— injury through pinching, crushing or entanglement;

— injury through strangling resulting from an item of clothing getting entangled;

— injury through contact with moving parts.

4.2.2 Electrical risks

— Injury through contact with live parts of the travelator;

— injury due to the electromagnetic fields;

Documents
Document Sharing Hub
Full document details: BS EN 15700:2011

— injury due to overvoltage (e.g. lightning strike).

4.2.3 Thermal risks

— Burns.

4.3 List of hazardous situations or danger factors

— Passengers slipping on the belt (see 5.8.2.2);

— change in speed or difference in speed between the passenger and the belt (see 5.2.3.3, 5.2.3.4, 5.2.5);

— too steep a gradient or too significant a change in gradient (see 5.2.3);

— loss of stability of the travelator (see 5.2.1, 5.8);

— sudden start or stop of the belt (see 5.4.3, 5.5.2);

— unexpected start-up of the travelator (see 5.4.3, 5.5.3.5, 5.6.1, 5.6.3);

— break of the moving belt or deterioration of the travelator (see 5.5.7, 5.8.1.4.1, 7.3.2);

— congestion at the top station (see 5.2.4.2, 5.5.3.3);

— presence of foreign bodies adjacent to the travelator (see 5.2.4.2, 5.2.4.3);

— excess clearance between the belt and the safety flap (see 5.5.4.2);

— excess clearance between the modular elements of the belt (see 5.3.1);

— access to rotating parts (see 5.3.3, 5.7.1);

— access to electrical devices (see 5.7.1, 5.7.3, 5.7.4, 5.7.5);

— excess clearance between the belt and belt covering or any other part of the travelator (see 5.3.1, 5.2.3.3, 5.2.3.4, 5.3.2.3, 5.3.3);

— drawing in of a limb between the belt and safety flap, coverings or guides (see 5.3.4, 5.3.5, 5.5.4);

— entanglement of an item of clothing between the belt and the safety flap, coverings or guides (see 5.3.2.3, 5.3.3, 5.5.4);

— excessive height of the belt above the ground or the snow (see 5.2.4.3);

— reversal of the direction of movement of the belt (see 5.4.2);

— failure of the electric circuit (see 5.5.1, 5.4.2);

— lightning strikes (see 5.7.5); the risk of a travelator passenger being struck by lightning is negligible given the operational measures taken;

— lack of signage for the attention of the travelator user; such signage is specified (see 7.2) but it is the operational measures taken that shall ensure this signage is maintained;

— operation in unsuitable climatic conditions (see 5.5.1.1, 5.7.2);

AVA Documents
Document Sharing Hub

— insufficient snow removal; this risk is not covered as the operational measures shall deal with it;

— presence of ice on the travelator; this risk is not covered as the operational measures shall deal with it;

— unexpected or unintentional start-up (see 5.4.3, 5.5.3.5, 5.6.1, 5.7.4);

— non-compliance with the ergonomic principles (see 5.5.3.2);

— unexpected interruption of energy supply; the risk of a passenger falling is permissible in this case in the knowledge that the passengers are either skiers or users of winter sports equipment;

— fire on the travelator: The risk of a fire is not covered as the travelator is in the open air and evacuation of the passengers is facilitated by the small height difference between the top of the belt and the ground or snow: 0,30 m (see 5.2.4.3);

— noise is not regarded as a significant or pertinent risk for this type of machine.

5 Safety requirements and/or protective measures

5.1 General

Travelators shall conform to the safety requirements and/or safety measures of this clause.

In addition, travelators shall be designed in accordance with the principles of EN ISO 12100:2010 governing the specific, but not significant, hazards not covered by this document (e.g. cutting edges).

Guards shall comply with the requirements of EN 953.

5.2 Adaptation of the travelator to the terrain

5.2.1 Installation of the travelator

The travelator shall be stable. In particular, if the feet of the travelator require support, this shall be integral with the feet.

5.2.2 Layout

The layout shall allow a passenger on the travelator to leave it safely at any point along the line in the event of a stoppage of the device.

The plan-view layout shall be a straight line.

5.2.3 Longitudinal profile

5.2.3.1 General

The longitudinal profile shall not cause a passenger to lose his balance.

5.2.3.2 Line

At no point shall the gradient of the travelator exceed 25 %.

Documents
Document Sharing Hub

Full document details: BS EN 15700:2011

The difference in gradient between two consecutive sections of belt, each with a constant gradient and a minimum length of 1,5 m, shall not exceed 12,5 %.

5.2.3.3 Loading

A loading plate with a constant gradient and a minimum length of 1 m shall be installed at the lower end of the travelator. Its gradient shall be between –5 % and +5 % with reference to the horizontal (see Figure 1).

There shall be a maximum height difference of 30 cm between the loading plate and the snow or the ground on either side of the loading plate.

The gradient of the loading area in front of this plate shall be such that a skier can easily stop on it.

At the start, the travelator belt shall have a uniform gradient over a minimum length of 1,5 m. This gradient shall not exceed 12,5 % when compared with the loading plate.

The clearance between the loading plate and the belt shall not exceed 6 mm during operation.

Documents
Document Sharing Hub
Full document details: BS EN 15700:2011

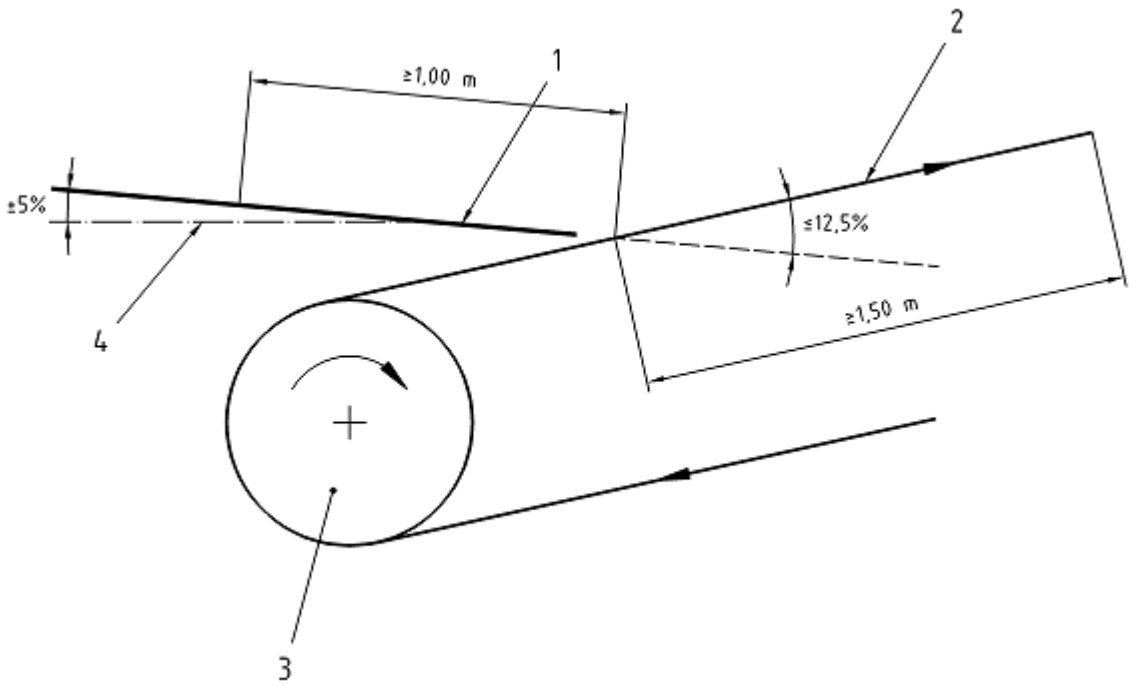

Key

1 Loading plate
2 Belt
3 Drum or wheel
4 Horizontal

Figure 1 — Loading

5.2.3.4 Unloading

The final section of the belt shall have a uniform gradient between ±5 % relative to the horizontal over a minimum length of 1 m (see Figure 2).

The penultimate section of the belt shall have a uniform gradient of at most 12,5 % relative to the final element over a minimum length of 1,5 m.

The unloading area, beyond the upper end of the belt, shall have a counter-gradient of between 5 % and 15 %. This shall have a minimum length of 2 m. This area shall start with an unloading plate.

On either side of the unloading plate, there shall be a maximum height difference of 30 cm between the plate and the snow or the ground.

The clearance between the safety flap and the unloading plate during operation shall not exceed 6 mm during operation. This requirement applies with the safety flap in its normal position.

Documents
Document Sharing Hub
Full document details: BS EN 15700:2011

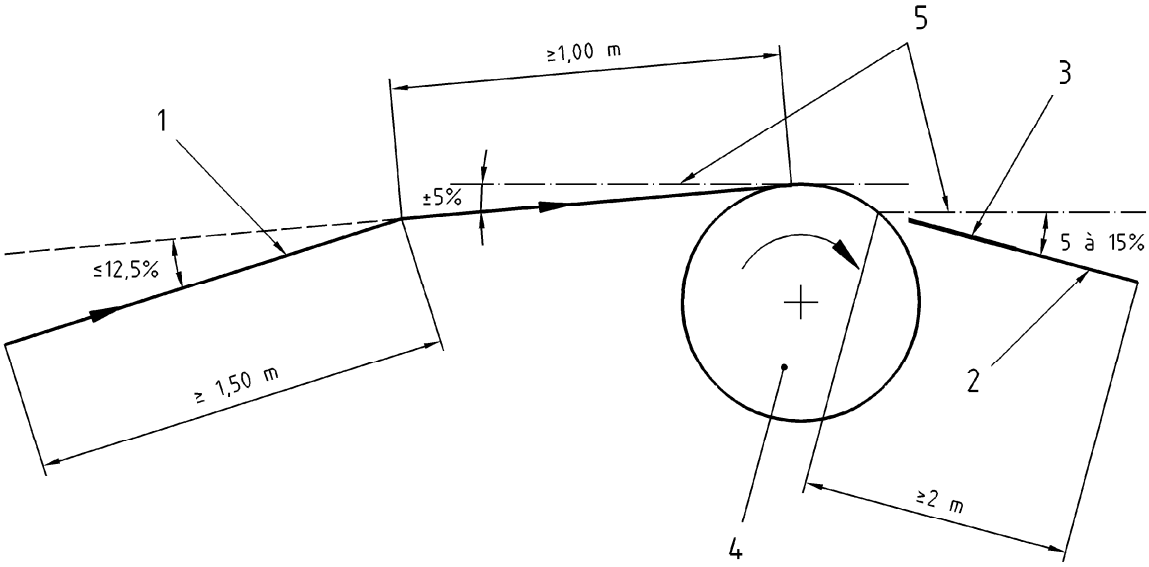

Key

1 Belt
2 Unloading area
3 Unloading plate
4 Drum or wheel
5 Horizontal

Figure 2 — Unloading point

5.2.4 Cross-section

5.2.4.1 The useful width of the belt shall not be less than 0,4 m.

The belt shall be horizontal in the transverse direction.

5.2.4.2 To prevent a skier from becoming stuck and then being run into by other passengers in the event that his skis are trapped across the travelator, a space free from all obstacles shall be provided above the level of the belt, except for the belt guides and covering, with a minimum width of 2 m centred on the middle of the belt (see Figure 3).

NOTE The value of 2 m is generally equivalent to the length of Alpine skis.

Documents
Document Sharing Hub
Full document details: BS EN 15700:2011