BS EN 15947-4:2022

BSI Standards Publication

Pyrotechnic articles — Fireworks, Categories F1, F2 and F3.

Part 4: Test methods

Documents
Document Sharing Hub

Full document details: BS EN 15947-4:2022

National foreword

This British Standard is the UK implementation of EN 15947-4:2022. It supersedes BS EN 15947-4:2015, which is withdrawn.

The UK participation in its preparation was entrusted to Technical Committee CII/47, Pyrotechnic articles.

A list of organizations represented on this committee can be obtained on request to its committee manager.

Contractual and legal considerations

This publication has been prepared in good faith, however no representation, warranty, assurance or undertaking (express or implied) is or will be made, and no responsibility or liability is or will be accepted by BSI in relation to the adequacy, accuracy, completeness or reasonableness of this publication. All and any such responsibility and liability is expressly disclaimed to the full extent permitted by the law.

This publication is provided as is, and is to be used at the recipient's own risk.

The recipient is advised to consider seeking professional guidance with respect to its use of this publication.

This publication is not intended to constitute a contract. Users are responsible for its correct application.

© The British Standards Institution 2022
Published by BSI Standards Limited 2022

ISBN 978 0 539 00482 3

ICS 71.100.30

Compliance with a British Standard cannot confer immunity from legal obligations.

This British Standard was published under the authority of the Standards Policy and Strategy Committee on 30 November 2022.

Amendments/corrigenda issued since publication

Date	Text affected

Documents
Document Sharing Hub

Full document details: BS EN 15947-4:2022

EUROPEAN STANDARD

NORME EUROPÉENNE

EUROPÄISCHE NORM

EN 15947-4

October 2022

ICS 71.100.30

Supersedes EN 15947-4:2015

English Version

Pyrotechnic articles - Fireworks, Categories F1, F2 and F3 - Part 4: Test methods

Articles pyrotechniques - Artifices de divertissement, Catégories F1, F2 et F3 - Partie 4 : Méthodes d'essai

Pyrotechnische Gegenstände - Feuerwerkskörper, Kategorien F1, F2 und F3 - Teil 4: Prüfverfahren

This European Standard was approved by CEN on 8 August 2022.

CEN members are bound to comply with the CEN/CENELEC Internal Regulations which stipulate the conditions for giving this European Standard the status of a national standard without any alteration. Up-to-date lists and bibliographical references concerning such national standards may be obtained on application to the CEN-CENELEC Management Centre or to any CEN member.

This European Standard exists in three official versions (English, French, German). A version in any other language made by translation under the responsibility of a CEN member into its own language and notified to the CEN-CENELEC Management Centre has the same status as the official versions.

CEN members are the national standards bodies of Austria, Belgium, Bulgaria, Croatia, Cyprus, Czech Republic, Denmark, Estonia, Finland, France, Germany, Greece, Hungary, Iceland, Ireland, Italy, Latvia, Lithuania, Luxembourg, Malta, Netherlands, Norway, Poland, Portugal, Republic of North Macedonia, Romania, Serbia, Slovakia, Slovenia, Spain, Sweden, Switzerland, Türkiye and United Kingdom.

EUROPEAN COMMITTEE FOR STANDARDIZATION
COMITÉ EUROPÉEN DE NORMALISATION
EUROPÄISCHES KOMITEE FÜR NORMUNG

CEN-CENELEC Management Centre: Rue de la Science 23, B-1040 Brussels

© 2022 CEN All rights of exploitation in any form and by any means reserved worldwide for CEN national Members.

Ref. No. EN 15947-4:2022 E

Documents
Document Sharing Hub

Full document details: BS EN 15947-4:2022

Contents

Page

European foreword 4
1 Scope 6
2 Normative references 6
3 Terms and definitions 6
4 Test environment 6
4.1 General 6
4.2 Indoor 6
4.3 Outdoor 7
4.3.1 General 7
4.3.2 Category F1 7
4.3.3 Category F2 7
4.3.4 Category F3 7
4.4 Monitoring height 7
5 Apparatus 7
6 Methods of tests 12
6.1 Construction and stability 12
6.1.1 Length of handle 12
6.1.2 Attachment of separate handle or separate base 13
6.1.3 Length of item 13
6.1.4 Length of pull-string or pull-strip 14
6.1.5 Determination of diameter 14
6.1.6 Attachment of initial fuse 14
6.1.7 Resistance to ignition by an abrasive surface 14
6.1.8 Breakability of end closures 15
6.2 Design – Verification 15
6.2.1 General 15
6.2.2 Conformity to drawings and part lists 15
6.2.3 Determination of net explosive content 16
6.3 Paper tests 17
6.3.1 Test for burning or incandescent matter 17
6.3.2 Test for horizontally projected debris 18
6.3.3 Test for vertically projected debris 20
6.4 Angle of ascent and height of explosion 21
6.4.1 Apparatus 21
6.4.2 Procedure for double banger 22
6.4.3 Procedure for items other than double banger 22
6.5 Measurement of sound pressure level 22
6.5.1 General measurement for outdoors 22
6.5.2 Party popper 23
6.5.3 Christmas cracker and snap for indoors 24
6.6 Time measurement 25
6.6.1 Apparatus 25
6.6.2 Procedure 25
6.7 Measuring of labelling 25

Documents
Document Sharing Hub
Full document details: BS EN 15947-4:2022

6.7.1 Apparatus ... 25
6.7.2 Procedure ... 25
6.8 Extinguishing of flames ... 26
6.8.1 Apparatus ... 26
6.8.2 Procedure ... 26
6.9 Burning rate of composition ... 26
6.9.1 Apparatus ... 26
6.9.2 Procedure ... 26
6.10 Droop test ... 26
6.10.1 Apparatus ... 26
6.10.2 Procedure ... 26
6.11 Projected debris (outdoor) ... 26
6.11.1 Apparatus ... 26
6.11.2 Procedure ... 26
6.12 Incandescent matter ... 27
6.13 Visual and audible examinations ... 27
6.14 Mechanical conditioning ... 27
6.14.1 Apparatus ... 27
6.14.2 Procedure ... 27
6.15 Thermal conditioning ... 28
6.15.1 Apparatus ... 28
6.15.2 Procedure ... 28
6.16 Striking surface test ... 28
6.16.1 Apparatus ... 28
6.16.2 Procedure ... 28
6.17 Function test ... 28
6.17.1 Apparatus ... 28
6.17.2 Procedure ... 28
6.18 Determination of tube angle ... 29
6.18.1 Apparatus ... 29
6.18.2 Procedure ... 29

Annex A (informative) **Mechanical conditioning (shock apparatus)** ... 30

Annex B (normative) **Determination of silver fulminate** ... 33

B.1 Reagents ... 33

B.2 Apparatus ... 33

B.3 Procedure ... 33

Annex ZA (informative) **Relationship between this European Standard and the essential safety requirements of Directive 2013/29/EU aimed to be covered** ... 35

Bibliography ... 36

Documents
Document Sharing Hub
Full document details: BS EN 15947-4:2022

European foreword

This document (EN 15947-4:2022) has been prepared by Technical Committee CEN/TC 212 “Pyrotechnic articles”, the secretariat of which is held by NEN.

This European Standard shall be given the status of a national standard, either by publication of an identical text or by endorsement, at the latest by April 2023, and conflicting national standards shall be withdrawn at the latest by December 2023.

Attention is drawn to the possibility that some of the elements of this document may be the subject of patent rights. CEN shall not be held responsible for identifying any or all such patent rights.

This document supersedes EN 15947-4:2015.

In comparison with the previous edition EN 15947-4:2015, the following technical modifications have been made:

— as a result of the inclusion of a new test method (6.1.8) two new apparatuses 5.28 “Dropping Tube” and 5.29 “Mass cylindrical in shape” were added;

— as a consequence of the inclusion of hand-held bengal flame (category F1) into the standard the titles for subclauses 6.1.1.2.1, 6.1.1.2.2 and 6.1.1.2.3 are changed into “6.1.1.2.1 Hand-held fireworks with uncoated ends as handles”, “6.1.1.2.2 Hand-held fireworks where the handle is an integral part of the body and not filled with pyrotechnic composition” and “6.1.1.2.3 Hand-held fireworks where the handle is a separate component and not filled with pyrotechnic composition”;

— a sentence to cover the testing of fuses fixed with adhesive tape for certain articles is added into subclause 6.1.6.2;

— a new test method under subclause 6.1.8 “Breakability of end closures” was added;

— Table 2 and Table 3 into subclause 6.3.1.2.2 are updated including all possible types;

— Figure 9 into subclause 6.5.2 has been revised, considering a new positioning of the sound meter with regards to the party popper;

— bullet point in subclause 6.14.1 has been removed and changes have been done into the whole subclause proposing an appropriate balance (5.7.3) fitting with the accuracy needed;

— “height of initial fuse for mounted wheels in category F3” has been removed.

This document has been prepared under a Standardization Request (M/583) concerning pyrotechnic articles given to CEN by the European Commission and the European Free Trade Association, and supports Essential Safety requirements of Directive 2013/29/EU.

For relationship with Directive 2013/29/EU, see informative Annex ZA, which is an integral part of this document.

This document is one of the series of standards as listed below:

— EN 15947-1, *Pyrotechnic articles — Fireworks, Categories F1, F2 and F3 — Part 1: Terminology*

Documents
Document Sharing Hub

Full document details: BS EN 15947-4:2022

— EN 15947-2, *Pyrotechnic articles — Fireworks, Categories F1, F2 and F3 — Part 2: Categories and types of firework*

— EN 15947-3, *Pyrotechnic articles — Fireworks, Categories F1, F2 and F3 — Part 3: Minimum labelling requirements*

— EN 15947-4, *Pyrotechnic articles — Fireworks, Categories F1, F2 and F3 — Part 4: Test methods*

— EN 15947-5, *Pyrotechnic articles — Fireworks, Categories F1, F2 and F3 — Part 5: Requirements for construction and performance*

Any feedback and questions on this document should be directed to the users' national standards body. A complete listing of these bodies can be found on the CEN website.

According to the CEN-CENELEC Internal Regulations, the national standards organisations of the following countries are bound to implement this European Standard: Austria, Belgium, Bulgaria, Croatia, Cyprus, Czech Republic, Denmark, Estonia, Finland, France, Germany, Greece, Hungary, Iceland, Ireland, Italy, Latvia, Lithuania, Luxembourg, Malta, Netherlands, Norway, Poland, Portugal, Republic of North Macedonia, Romania, Serbia, Slovakia, Slovenia, Spain, Sweden, Switzerland, Türkiye and the United Kingdom.

Documents
Document Sharing Hub
Full document details: BS EN 15947-4:2022

1 Scope

This document specifies test methods. It is applicable to fireworks of the categories F1, F2 and F3 as defined by Article 6 Paragraph (1) clause (a) subclause (i) to (iii) of Directive 2013/29/EU.

2 Normative references

The following documents are referred to in the text in such a way that some or all of their content constitutes requirements of this document. For dated references, only the edition cited applies. For undated references, the latest edition of the referenced document (including any amendments) applies.

EN 15947-1:2022, *Pyrotechnic articles — Fireworks, Categories F1, F2 and F3 — Part 1: Terminology*

EN 15947-3:2022, *Pyrotechnic articles — Fireworks, Categories F1, F2 and F3 — Part 3: Minimum labelling requirements*

EN 15947-5:2022, *Pyrotechnic articles — Fireworks, Categories F1, F2 and F3 — Part 5: Requirements for construction and performance*

EN 61672-1:2013, *Electroacoustics — Sound level meters — Part 1: Specifications*

EN ISO 3696:1995, *Water for analytical laboratory use — Specification and test methods (ISO 3696:1987)*

ISO 4793:1980, *Laboratory sintered (fritted) filters — Porosity grading, classification and designation*

ISO 6344-3:2013, *Coated abrasives — Grain size analysis — Part 3: Determination of grain size distribution of microgrits P240 to P2500*

ISO 21948:2001, *Coated abrasives — Plain sheets*

3 Terms and definitions

For the purposes of this document, the terms and definitions given in EN 15947-1:2022 apply.

ISO and IEC maintain terminological databases for use in standardization at the following addresses:

— IEC Electropedia: available at https://www.electropedia.org/

— ISO Online browsing platform: available at https://www.iso.org/obp/ui

4 Test environment

4.1 General

The test area shall be a clean, flat, horizontal, non-flammable and sound reflecting surface (for example concrete). The test sample shall be placed in accordance with the instructions on the label in the centre of the test area.

4.2 Indoor

The test area shall be indoors.

The test area shall be inside a fume cupboard, or similar enclosed space, which is capable of preventing movement of air.

Documents
Document Sharing Hub

Full document details: BS EN 15947-4:2022

4.3 Outdoor

4.3.1 General

The test area shall be an outdoor site. If applicable, provisions shall be made at the centre of the test area for partially burying into the ground.

If applicable, insert support pole in the centre of the test area.

4.3.2 Category F1

A test area meeting the requirements given in 4.1, with a radius of at least 2,0 m and a circle, radius 1,0 m, shall be marked around the centre of the test area.

4.3.3 Category F2

A test area meeting the requirements given in 4.1, with a radius of at least 9,0 m and a circle, radius 8,0 m, shall be marked around the centre of the test area.

4.3.4 Category F3

A test area meeting the requirements given in 4.1, with a radius of at least 16,0 m and a circle, radius 15,0 m, shall be marked around the centre of the test area.

4.4 Monitoring height

Two positions in the same horizontal plane for monitoring the height of ascent and angle of flight shall be provided, at a measured distance of at least 50 m from and at an angle of 90° to each other in relation to the testing point.

5 Apparatus

The described apparatuses are only examples, any equivalent apparatus with the same accuracy or better can be used.

5.1 Timing device

5.1.1 Timing device, capable of being read to the nearest 0,1 s.

5.1.2 Timing device, capable of being read to the nearest 1 min.

5.2 Calliper, flat faced vernier calliper reading to 0,1 mm.

5.3 Ruler, reading to 1 mm.

5.4 Measuring tape, reading to 10 mm.

5.5 Wind speed meter, capable to measure with accuracy of at least 0,5 m/s.

5.6 Masses with clamping device

5.6.1 Masses with clamping device, (50 ± 1,0) g mass total.

5.6.2 Masses with clamping device, (100 ± 1,0) g mass total.

5.6.3 Masses with clamping device, (500 ± 1,0) g mass total.

Documents
Document Sharing Hub
Full document details: BS EN 15947-4:2022

5.7 Balance

5.7.1 Balance, reading to 100 mg.

5.7.2 Balance, reading to 10 mg.

5.7.3 Balance, reading to 0,1 mg.

5.8 Abrasive sheet, large enough to permit striking of the ignition head, conforming to ISO 21948:2001, grit P240 measured in accordance with ISO 6344-3:2013.

5.9 Temperature chamber

5.9.1 Temperature chamber, up to (+130 ± 2,5) °C.

5.9.2 Temperature chamber, up to (+75 ± 2,5) °C.

5.9.3 Temperature chamber, up to (+50 ± 2,5) °C.

5.10 Test paper, 700 mm × 750 mm, (80 ± 3,0) g/m^2.

5.11 Clamping device

Means of clamping to hold different test sample at different heights and/or angles.

5.12 Plate, non-flammable, with a diameter of (200 ± 5) mm.

5.13 Paper holder

Means of clamping to fix the test paper in a horizontal or vertical plane in different heights.

5.14 Viewing screen

Viewing screens, as shown in Figure 1, shall be provided for monitoring height and angle of flight criteria. A configuration for height monitoring is given in Figure 2.

Documents
Document Sharing Hub

Full document details: BS EN 15947-4:2022

Dimensions in millimetres

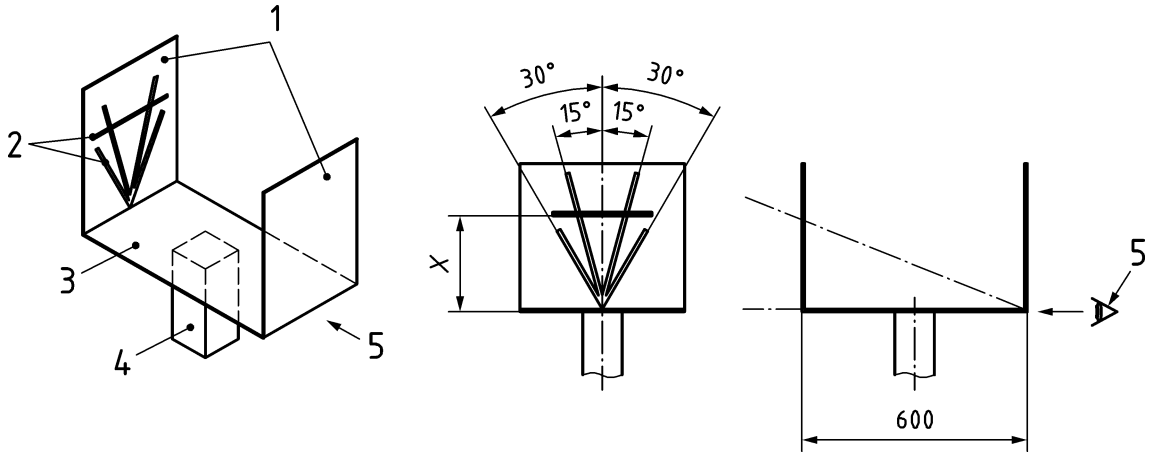

Key

1 acryl glass
2 black tape, 10 mm to 20 mm wide
3 solid base
4 stand
5 position of observer

Figure 1 — Viewing screen - general view, observer view and side view

The distance X in Figure 1 is given in metres by the Formula (1):

$$\frac{20\,\mathrm{m}}{X} = \frac{Y}{0{,}6\,\mathrm{m}} \tag{1}$$

where

Y is the distance in metres from the viewing point to the testing point.

EXAMPLE Y = 50 m

$$X = \frac{0{,}6\,\mathrm{m} \cdot 20\,\mathrm{m}}{Y} = \frac{0{,}6\,\mathrm{m} \cdot 20\,\mathrm{m}}{50\,\mathrm{m}} = 0{,}24\,\mathrm{m}$$

Documents
Document Sharing Hub
Full document details: BS EN 15947-4:2022

Dimensions in meters

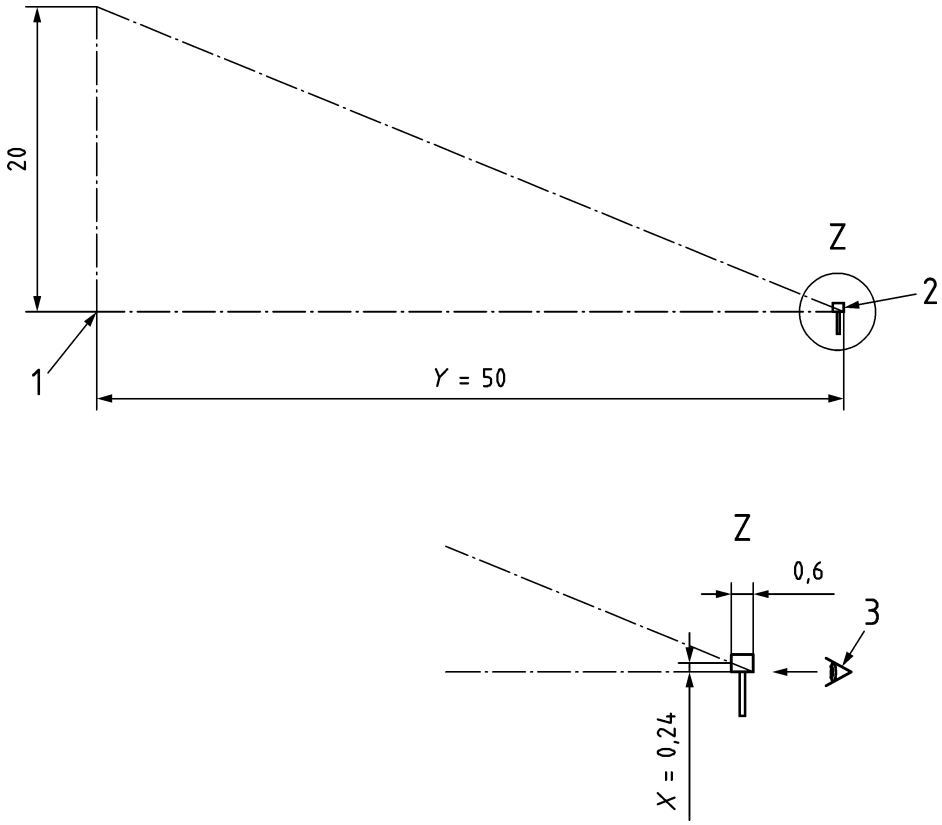

Key

1 base of firework before firing

2 sighting device

3 position of observer

Figure 2 — Use of a viewing screen to monitor a height of 20 m - side view and sighting device detail

5.15 Poles, with 3 m height.

5.16 Rack

Horizontal plate with a central hole of 800 mm diameter, mounted in a height of 3,0 m above the ground in a rack.

5.17 Sound level meter, class 1 of EN 61672-1:2013 with free-field microphone.

5.18 Shock apparatus, shall provide a deceleration of 490^{+100}_{-50} m/s² (when measured at the centre of an unloaded platform) and the mechanical conditioning impulse duration (time elapsed from the starting of the machine's deceleration to the time in which the deceleration reaches its maximum value during each first shock pulse) shall be 2 ms ± 1 ms working at a frequency of 1 Hz ± 0,1 Hz.

NOTE An example of an apparatus is shown in Annex A.

5.19 Goniometer, read to 1°.

Documents
Document Sharing Hub
Full document details: BS EN 15947-4:2022