BS EN 16121:2023
Incorporating corrigendum April 2025

BSI Standards Publication

Non-domestic storage furniture — Requirements for safety, strength, durability and stability

Documents
Document Sharing Hub

Full document details: BS EN 16121:2023

National foreword

This British Standard is the UK implementation of EN 16121:2023, incorporating corrigendum April 2025. It supersedes BS EN 14073-2:2004 and BS EN 16121:2013+A1:2017, which are withdrawn.

The start and finish of text introduced or altered by corrigendum is indicated in the text by tags. Text altered by CEN corrigendum April 2025 is indicated in the text by ⟦AC1⟩ ⟨AC1⟧.

The UK participation in its preparation was entrusted to Technical Committee FW/0/2, Domestic and Contract Furniture.

A list of organizations represented on this committee can be obtained on request to its committee manager.

Contractual and legal considerations

This publication has been prepared in good faith, however no representation, warranty, assurance or undertaking (express or implied) is or will be made, and no responsibility or liability is or will be accepted by BSI in relation to the adequacy, accuracy, completeness or reasonableness of this publication. All and any such responsibility and liability is expressly disclaimed to the full extent permitted by the law.

This publication is provided as is, and is to be used at the recipient's own risk.

The recipient is advised to consider seeking professional guidance with respect to its use of this publication.

This publication is not intended to constitute a contract. Users are responsible for its correct application.

© The British Standards Institution 2025
Published by BSI Standards Limited 2025

ISBN 978 0 539 36036 3

ICS 97.140

Compliance with a British Standard cannot confer immunity from legal obligations.

This British Standard was published under the authority of the Standards Policy and Strategy Committee on 31 January 2024.

Amendments/corrigenda issued since publication

Date	Text affected
30 April 2025	Implementation of CEN corrigendum April 2025: Table 2 corrected

Documents
Document Sharing Hub

Full document details: BS EN 16121:2023

EUROPEAN STANDARD

NORME EUROPÉENNE

EUROPÄISCHE NORM

EN 16121

December 2023

ICS 97.140

Supersedes EN 14073-2:2004, EN 16121:2013+A1:2017

English Version

Non-domestic storage furniture - Requirements for safety, strength, durability and stability

Meubles de rangement à usage collectif - Exigences pour la sécurité, la résistance, la durabilité et la stabilité

Behältnismöbel für den Nicht-Wohnbereich - Anforderungen an die Sicherheit, Festigkeit, Dauerhaltbarkeit und Standsicherheit

This European Standard was approved by CEN on 27 November 2023.

CEN members are bound to comply with the CEN/CENELEC Internal Regulations which stipulate the conditions for giving this European Standard the status of a national standard without any alteration. Up-to-date lists and bibliographical references concerning such national standards may be obtained on application to the CEN-CENELEC Management Centre or to any CEN member.

This European Standard exists in three official versions (English, French, German). A version in any other language made by translation under the responsibility of a CEN member into its own language and notified to the CEN-CENELEC Management Centre has the same status as the official versions.

CEN members are the national standards bodies of Austria, Belgium, Bulgaria, Croatia, Cyprus, Czech Republic, Denmark, Estonia, Finland, France, Germany, Greece, Hungary, Iceland, Ireland, Italy, Latvia, Lithuania, Luxembourg, Malta, Netherlands, Norway, Poland, Portugal, Republic of North Macedonia, Romania, Serbia, Slovakia, Slovenia, Spain, Sweden, Switzerland, Türkiye and United Kingdom.

EUROPEAN COMMITTEE FOR STANDARDIZATION
COMITÉ EUROPÉEN DE NORMALISATION
EUROPÄISCHES KOMITEE FÜR NORMUNG

CEN-CENELEC Management Centre: Rue de la Science 23, B-1040 Brussels

© 2023 CEN All rights of exploitation in any form and by any means reserved worldwide for CEN national Members.

Ref. No. EN 16121:2023 E

Documents
Document Sharing Hub

Full document details: BS EN 16121:2023

Contents

Page

European foreword 4
1 Scope 5
2 Normative references 5
3 Terms and definitions 6
4 Test sequence and tolerances 8
4.1 Individual units 8
4.2 Range of units 8
4.3 Tolerances 8
5 Safety requirements 8
5.1 Principles of safety requirements 8
5.1.1 General 8
5.1.2 Determination of centre of gravity 9
5.1.3 Determination of total mass 9
5.2 General safety requirements 9
5.3 Holes in tubular/rigid components 10
5.4 Shear and compression points 10
5.4.1 Shear and compression points when setting up and folding 10
5.4.2 Shear and compression points under influence of powered mechanisms 10
5.4.3 Shear and compression points during use 10
5.5 Hinged horizontal lids 11
5.6 Vertical glass components 11
5.7 Stability 11
5.8 Structural safety 13
5.8.1 Structural safety tests 13
5.8.2 Structural safety requirements 15
6 Strength and durability 15
6.1 General 15
6.2 Strength and durability requirements 17
7 Information for use 17
8 Test report 17
Annex A (normative) Test methods for finger entrapment and shear and compression 19
A.1 Finger entrapment 19
A.1.1 Test equipment 19
A.1.2 Test method 20
A.2 Shear and compression 23
A.2.1 Test equipment 23
A.2.2 Test method - Shear and compression points created under the influence of powered mechanisms 23
A.2.3 Test method — Shear and compression points created during normal use 24

Documents
Document Sharing Hub
Full document details: BS EN 16121:2023

Annex B (normative) **Requirements for primary schools, kindergartens and similar applications** 25
B.1 General 25
B.2 Requirements 25
B.2.1 Shear and compression points 25
B.2.2 Principles of safety requirements 25
B.2.3 General safety requirements 25
B.2.4 Glass 25
B.2.5 Stability 25
B.2.6 Strength and durability – drop test for trays 25
B.3 Additional requirements for furniture for kindergartens 26
B.3.1 Finger entrapment 26
B.3.2 Shear and compression points under the influence of powered mechanisms 26
B.3.3 Shear and compression points during use 26
Annex C (normative) **Selecting product from a range of furniture - Range of units** 27
Annex D (informative) **Guidance of test severity in relation to application for non-domestic storage furniture** 28
Annex E (informative) **Suggested loads for tests not specified in this document** 29
E.1 Suggested loads 29
E.1.1 General 29
E.1.2 Stability 29
E.1.3 Strength and durability 29

Documents
Document Sharing Hub
Full document details: BS EN 16121:2023

European foreword

This document (EN 16121:2023) has been prepared by Technical Committee CEN/TC 207 “Furniture”, the secretariat of which is held by UNI.

This European Standard shall be given the status of a national standard, either by publication of an identical text or by endorsement, at the latest by June 2024, and conflicting national standards shall be withdrawn at the latest by June 2024.

Attention is drawn to the possibility that some of the elements of this document may be the subject of patent rights. CEN shall not be held responsible for identifying any or all such patent rights.

This document supersedes EN 16121:2013+A1:2017 and EN 14073-2:2004.

In comparison with the previous version EN 16121:2013+A1:2017 of edition EN 16121:2013 and of edition EN 14073-2:2004, the following technical modifications have been made:

— update on the requirements for finger entrapment reflecting CEN/TR 17202:2018 including an annex containing test methods;

— normative references have been updated;

— requirements for glass have been improved;

— finger entrapment/shear squeeze requirements have been corrected and made applicable to kindergarten only;

— office and laboratory storage have been added to the list of applications;

— the fields of application in relation to the test severity were amended;

— test load added in Annex E.

Any feedback and questions on this document should be directed to the users’ national standards body. A complete listing of these bodies can be found on the CEN website.

According to the CEN-CENELEC Internal Regulations, the national standards organisations of the following countries are bound to implement this European Standard: Austria, Belgium, Bulgaria, Croatia, Cyprus, Czech Republic, Denmark, Estonia, Finland, France, Germany, Greece, Hungary, Iceland, Ireland, Italy, Latvia, Lithuania, Luxembourg, Malta, Netherlands, Norway, Poland, Portugal, Republic of North Macedonia, Romania, Serbia, Slovakia, Slovenia, Spain, Sweden, Switzerland, Türkiye and the United Kingdom.

Documents
Document Sharing Hub
Full document details: BS EN 16121:2023

1 Scope

This document specifies requirements for the safety, strength, and durability for all types of non-domestic storage furniture including office storage furniture.

It does not apply to domestic storage, industrial storage, kitchen, catering equipment, retail storage, and industrial storage lockers.

Requirements for strength and durability do not apply to the structure of the building for example the strength of wall hanging cabinets includes only the cabinets and the parts used for attachment. The wall and the wall attachments are not included.

This document contains five annexes:

— Annex A (normative) Test methods for finger entrapment and shear and compression;

— Annex B (normative) Requirements for schools, kindergartens and similar applications;

— Annex C (normative) Selecting product from a range of furniture;

— Annex D (informative) Guidance of test severity in relation to application for non-domestic storage furniture;

— Annex E (informative) Suggested loads for tests not specified in this document.

It does not include requirements for the resistance to ageing, degradation and flammability.

2 Normative references

The following documents are referred to in the text in such a way that some or all of their content constitutes requirements of this document. For dated references, only the edition cited applies. For undated references, the latest edition of the referenced document (including any amendments) applies.

EN 71-1:2014+A1:2018, *Safety of toys — Part 1: Mechanical and physical properties*

EN 716-2:2017, *Furniture — Children's cots and folding cots for domestic use — Part 2: Test methods*

EN 12150-1:2015+A1:2019, *Glass in building — Thermally toughened soda lime silicate safety glass — Part 1: Definition and description*

EN 12600, *Glass in building — Pendulum test — Impact test method and classification for flat glass*

EN 14072:2003, *Glass in furniture — Test methods*

EN 16122:2012, *Domestic and non-domestic storage furniture — Test methods for the determination of strength, durability and stability*

Documents
Document Sharing Hub

Full document details: BS EN 16121:2023

3 Terms and definitions

For the purposes of this document, the following terms and definitions apply.

ISO and IEC maintain terminology databases for use in standardization at the following addresses:

— ISO Online browsing platform: available at https://www.iso.org/obp/

— IEC Electropedia: available at https://www.electropedia.org/:

3.1
accessible parts
parts to which access can easily be gained by the user when in its intended configuration of use and for which the probability of unintentional user contact is high, including any parts that are less than 1 000 mm above any surface on which a child could stand, but with the exception of doors, flaps and extension elements including their hardware

Note 1 to entry: This includes, but is not limited to:

— the exposed edges and corners of storage units to which the user has access when the doors, drawers and extension elements are closed,

— the corners and edges of handles.

3.2
parts accessible during setting up and folding
parts to which access can only be gained when setting up and folding the furniture

3.3
unit
complete item of furniture including the structure and all components such as drawers, doors and other storage features

3.4
clear height
unobstructed height above the top of the bottom surface

EXAMPLE The top of the extension element bottom and the lower edge of the extension element above, or the structure of the unit (see Figure 1).

Documents
Document Sharing Hub
Full document details: BS EN 16121:2023

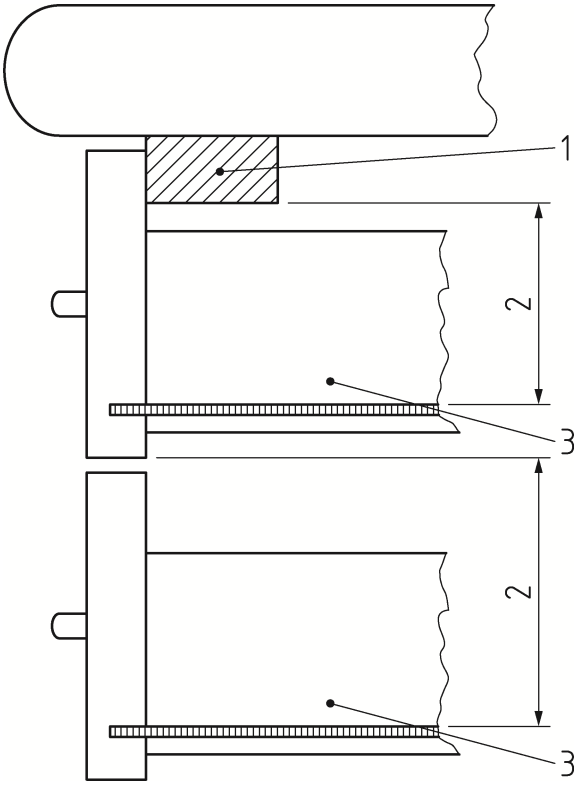

Key

1 structure of the unit
2 clear height *H*
3 extension element

Figure 1 — Clear height

3.5
levelling device
adjustable device intended to keep the item of furniture perpendicular to the floor

EXAMPLE Adjustable feet or similar.

3.6
tray
storage element that is designed, under normal use, to be removed from the storage unit and used independently

3.7
potential energy
measured in Nm and calculated by multiplication of the total mass (kg) of the unit (or the part), gravity (m/s^2) and the height (m) above the floor to the centre of gravity

Note 1 to entry: For the purpose of this document gravity can be considered to be 10 m/s^2.

Documents
Document Sharing Hub
Full document details: BS EN 16121:2023

4 Test sequence and tolerances

4.1 Individual units

When a single unit is supplied for test all the safety tests (5) shall be carried out on the same sample and in the order in which they are listed in this document. Tests for strength and durability (6) may be carried out on a second sample.

4.2 Range of units

For a range of units featuring similar construction and sharing hardware, or single units with features utilizing identical hardware and fixings (e.g. a unit with different size drawers), selected tests shall be carried out on the worst case units/components as detailed in Annex C.

The tests shall be carried out in the order in which they are listed in this document.

If one unit or component within a range of products does not satisfy the requirements of this document then compliance for the full range cannot be claimed.

4.3 Tolerances

Unless otherwise stated, the following tolerances are applicable:

Forces: ± 5 % of the nominal force;

NOTE 1 Forces can be replaced by masses. The relationship 10*N* = 1 kg can be used.

Velocities: ± 5 % of the nominal velocity;

Masses: ± 1 % of the nominal mass;

Dimensions: all dimensions less than 300 mm shall have a tolerance of ± 1 mm of the nominal dimension; all other dimensions shall have a tolerance of ± 0,5 % of the nominal dimension;

Angles: ± 2° of the nominal angle.

NOTE 2 For the purposes of uncertainty measurement, test results are not considered to be adversely affected when the above tolerances are met.

5 Safety requirements

5.1 Principles of safety requirements

5.1.1 General

Safety requirements are based upon the knowledge that storage furniture and its parts are likely to cause injury only when they are heavy and fall through a significant distance. This is possible if floor standing units overbalance, wall or screen mounted units become detached, or heavy parts become detached from units.

Therefore, the tests contained in Table 4 are only considered to affect safety when:

— the height of the centre of gravity of the unit, or any part, is > 650 mm above the floor and the total mass is > 10 kg,

or

— when the potential energy (3.7) of the unit, or any part, is > 65 Nm and the height of the centre of gravity of the unit, or any part, is ≤ 650 mm.

Documents
Document Sharing Hub
Full document details: BS EN 16121:2023

5.1.2 Determination of centre of gravity

The centre of gravity of a component or unit shall be taken as the geometric centre of that component / unit, except in the case of extension elements, where the geometric centre of the usable volume shall be used.

The height of the centre of gravity above the floor shall be measured for storage furniture or their components when installed according to the manufacturer's instructions. Levelling devices shall be set at their middle position.

Height adjustable components shall be placed in their highest position.

All wall or top hanging units, or components thereof, are considered to have their centre of gravity more than 650 mm above the floor.

NOTE If the extension element or tray does not have an identifiable handle, the force is applied to the upper part of the front of this component.

5.1.3 Determination of total mass

The total mass is the mass of the component or unit plus the mass supported by it.

Unless the component is conspicuously and durably marked by the manufacturer with a maximum load, the mass of the contents shall be determined according to Table 1, which specifies mass per unit area for shelves and the mass per unit volume for extension elements, baskets and trays etc.

The volume of fixed baskets and trays shall be taken as the volume contained below their top edge.

The volume of extension elements shall be taken as the area of its bottom multiplied by the clear height (3.4).

Table 1 — Load to determine total mass and load applied to all components other than those undergoing test, excluding stability tests

Part	Unit	Load	
		1 - General	2 - Severe
Horizontal surfaces, tops, shelves, door baskets etc.	kg/dm^2	1,5	1,5
Extension elements, trays and baskets	kg/dm^3	0,2	0,5
Suspended pocket files	kg/dm [a]	4	4
Clothes rails	kg/dm	4	4
[a] Measured perpendicular to the plane of the pocket files.			

5.2 General safety requirements

The storage units shall be so designed as to minimize the risk of injury to the user.

All parts of the storage unit with which the user comes into contact, during intended use, shall be so designed that physical injury and damage are avoided. This requirement is met when:

1. the accessible parts are rounded or chamfered, and all other edges accessible during intended use are free from burrs and sharp edges;

2. feet of tubular components shall be capped or otherwise closed.

Documents
Document Sharing Hub
Full document details: BS EN 16121:2023