BS EN 16272-6:2014

BSI Standards Publication

Railway applications — Track — Noise barriers and related devices acting on airborne sound propagation — Test method for determining the acoustic performance

Part 6: Intrinsic characteristics — In situ values of airborne sound insulation under direct sound field conditions

bsi.

...making excellence a habit.™

Document Sharing Hub

Full document details: BS EN 16272-6:2014

National foreword

This British Standard is the UK implementation of EN 16272-6:2014.

The UK participation in its preparation was entrusted to Technical Committee RAE/2, Railway Applications - Track.

A list of organizations represented on this committee can be obtained on request to its secretary.

This publication does not purport to include all the necessary provisions of a contract. Users are responsible for its correct application.

© The British Standards Institution 2014. Published by BSI Standards Limited 2014

ISBN 978 0 580 76212 3

ICS 17.140.30; 93.080.30

Compliance with a British Standard cannot confer immunity from legal obligations.

This British Standard was published under the authority of the Standards Policy and Strategy Committee on 30 November 2014.

Amendments issued since publication

Date	Text affected

Documents
Document Sharing Hub

Full document details: BS EN 16272-6:2014

EUROPEAN STANDARD

NORME EUROPÉENNE

EUROPÄISCHE NORM

EN 16272-6

October 2014

ICS 17.140.30; 93.080.30

English Version

Railway applications - Track - Noise barriers and related devices acting on airborne sound propagation - Test method for determining the acoustic performance - Part 6: Intrinsic characteristics - In situ values of airborne sound insulation under direct sound field conditions

Applications ferroviaires - Dispositifs de réduction du bruit - Méthode d'essai pour la détermination des performances acoustiques - Partie 6 : Caractéristiques intrinsèques - Valeurs in situ de l'isolation acoustique au bruit aérien dans des conditions de champ acoustique direct

Bahnanwendungen - Oberbau - Lärmschutzwände und verwandte Vorrichtungen zur Beeinflussung der Luftschallausbreitung - Prüfverfahren zur Bestimmung der akustischen Eigenschaften - Teil 6: Produktspezifische Merkmale - In-situ-Werte zur Luftschalldämmung in gerichteten Schallfeldern

This European Standard was approved by CEN on 30 April 2014.

CEN members are bound to comply with the CEN/CENELEC Internal Regulations which stipulate the conditions for giving this European Standard the status of a national standard without any alteration. Up-to-date lists and bibliographical references concerning such national standards may be obtained on application to the CEN-CENELEC Management Centre or to any CEN member.

This European Standard exists in three official versions (English, French, German). A version in any other language made by translation under the responsibility of a CEN member into its own language and notified to the CEN-CENELEC Management Centre has the same status as the official versions.

CEN members are the national standards bodies of Austria, Belgium, Bulgaria, Croatia, Cyprus, Czech Republic, Denmark, Estonia, Finland, Former Yugoslav Republic of Macedonia, France, Germany, Greece, Hungary, Iceland, Ireland, Italy, Latvia, Lithuania, Luxembourg, Malta, Netherlands, Norway, Poland, Portugal, Romania, Slovakia, Slovenia, Spain, Sweden, Switzerland, Turkey and United Kingdom.

EUROPEAN COMMITTEE FOR STANDARDIZATION
COMITÉ EUROPÉEN DE NORMALISATION
EUROPÄISCHES KOMITEE FÜR NORMUNG

CEN-CENELEC Management Centre: Avenue Marnix 17, B-1000 Brussels

© 2014 CEN All rights of exploitation in any form and by any means reserved worldwide for CEN national Members.

Ref. No. EN 16272-6:2014 E

Documents
Document Sharing Hub

Full document details: BS EN 16272-6:2014

Contents

Page

Foreword 4

Introduction 5

1 Scope 8

2 Normative references 8

3 Terms and definitions 8

4 Symbols and abbreviations 13

5 Sound insulation index measurements 15
5.1 General principle 15
5.2 Measured quantity 15
5.3 Test arrangement 16
5.4 Measuring equipment 20
5.4.1 Components of the measuring system 20
5.4.2 Sound source 21
5.4.3 Test signal 21
5.5 Data processing 21
5.5.1 Calibration 21
5.5.2 Sample rate 22
5.5.3 Background noise 22
5.5.4 Scanning technique using a single microphone 22
5.5.5 Scanning technique using nine microphones 23
5.5.6 Adrienne temporal window 23
5.5.7 Placement of the Adrienne temporal window 24
5.5.8 Low frequency limit and sample size 25
5.6 Positioning of the measuring equipment 26
5.6.1 Selection of the measurement positions 26
5.6.2 Post measurements 27
5.6.3 Additional measurements 27
5.6.4 Reflecting objects 27
5.6.5 Safety considerations 27
5.7 Sample surface and meteorological conditions 28
5.7.1 Condition of the sample surface 28
5.7.2 Wind 28
5.7.3 Air temperature 28

6 Measurement uncertainty 28

7 Measuring procedure 28

8 Test report 29
8.1 Expression of results 29
8.2 Further information 29

Annex A (informative) **Measurement uncertainty** 31
A.1 General 31
A.2 Expression for the calculation of sound insulation index 31
A.3 Contributions to measurement uncertainty 32
A.4 Expanded uncertainty of measurement 33
A.5 Measurement uncertainty based upon reproducibility data 33

Annex B (informative) **Template of test report on airborne sound insulation of railway noise barriers** 34

AVA Documents
Document Sharing Hub

Full document details: BS EN 16272-6:2014

B.1 Template of test report **34**
B.2 Test setup (example) **36**
B.3 Test object and test situation (example) **38**
B.4 Results (example) **40**

Bibliography **46**

Documents
Document Sharing Hub
Full document details: BS EN 16272-6:2014

Foreword

This document (EN 16272-6:2014) has been prepared by Technical Committee CEN/TC 256 “Railway applications”, the secretariat of which is held by DIN.

This European Standard shall be given the status of a national standard, either by publication of an identical text or by endorsement, at the latest by April 2015 and conflicting national standards shall be withdrawn at the latest by April 2015.

Attention is drawn to the possibility that some of the elements of this document may be the subject of patent rights. CEN [and/or CENELEC] shall not be held responsible for identifying any or all such patent rights.

This document has been prepared under a mandate given to CEN by the European Commission and the European Free Trade Association.

This European Standard is one part of the series EN 16272, *Railway applications — Track — Noise barriers and related devices acting on airborne sound propagation — Test method for determining the acoustic performance*, as listed below:

— *Part 1: Intrinsic characteristics — Sound absorption in the laboratory under diffuse sound field conditions*;

— *Part 2: Intrinsic characteristics — Airborne sound insulation in the laboratory under diffuse sound field conditions*;

— *Part 3-1: Normalized railway noise spectrum and single number ratings for diffuse field applications*;

— *Part 3-2: Normalized railway noise spectrum and single number ratings for direct field applications*;

— Part 4: *Intrinsic characteristics — In situ values of sound diffraction under direct sound field conditions*

— *Part 5: Intrinsic characteristics — In situ values of sound reflection under direct sound field conditions* (CEN/TS 16272-5)*;*

— *Part 6: Intrinsic characteristics — In situ values of airborne sound insulation under direct sound field conditions*.

It will be read in conjunction with:

— EN 16272-2;

— EN 16272-3-1;

— EN 16272-3-2.

According to the CEN-CENELEC Internal Regulations, the national standards organizations of the following countries are bound to implement this European Standard: Austria, Belgium, Bulgaria, Croatia, Cyprus, Czech Republic, Denmark, Estonia, Finland, Former Yugoslav Republic of Macedonia, France, Germany, Greece, Hungary, Iceland, Ireland, Italy, Latvia, Lithuania, Luxembourg, Malta, Netherlands, Norway, Poland, Portugal, Romania, Slovakia, Slovenia, Spain, Sweden, Switzerland, Turkey and the United Kingdom.

Documents
Document Sharing Hub

Full document details: BS EN 16272-6:2014

Introduction

Noise barriers installed along railways need to provide adequate sound insulation so that sound transmitted directly through the device is not significant compared to the sound diffracted over the top. This European Standard specifies a test method for assessing the airborne sound insulation performance of noise barriers and related devices acting on airborne sound propagation designed for railways in non-reverberant conditions (a measure of intrinsic performance). It can be applied *in situ*, i.e. where the noise barriers are installed. The method can be applied without damaging the surface.

The method can be used to qualify products to be installed along railways as well as to verify the compliance of installed noise barriers to design specifications. Regular application of the method can be used to verify the long term performance of noise barriers.

The method requires the averaging of results of measurements taken at different points behind the device under test. The method is able to investigate flat and non-flat products.

The measurement results of this method for airborne sound insulation are comparable but not identical with the results of the EN 16272-2 method, mainly because the present method uses a directional sound field, while the EN 16272-2 method assumes a diffuse sound field (where all angles of incidence are equally probable). The test method described in this European Standard should not be used to determine the intrinsic characteristics of airborne sound insulation for noise barriers to be installed in reverberant conditions, e.g. inside tunnels or deep trenches or under covers or very close to the rail track.

For the purpose of this European standard reverberant conditions are defined based on the geometric envelope, e, across the rail formed by the barriers, trench sides or buildings (the envelope does not include the railway surface) as shown by the dashed lines in Figure 1. Conditions are defined as being reverberant when the percentage of open space in the envelope is less than or equal to 25 %, i.e.:

Reverberant conditions occur when $w/e \leq 0{,}25$, where $e = (w + h_1 + h_2)$

This criterion is applied also to the open space between the train body and the barrier surface.

Documents
Document Sharing Hub
Full document details: BS EN 16272-6:2014

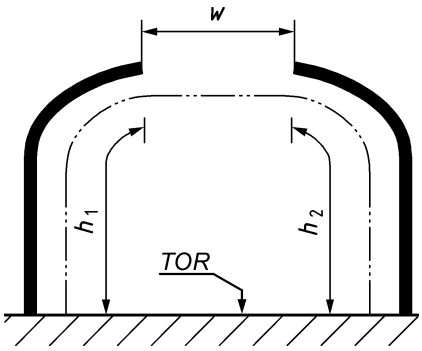

a) Partial cover on both sides of the railway; envelope, $e = w + h_1 + h_2$

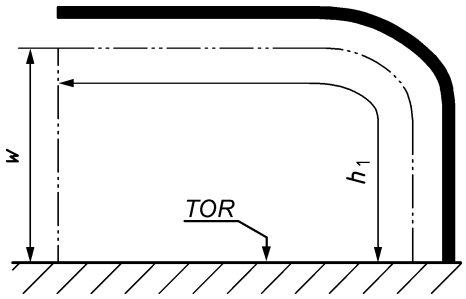

b) Partial cover on one side of the railway; $e = w + h_1$

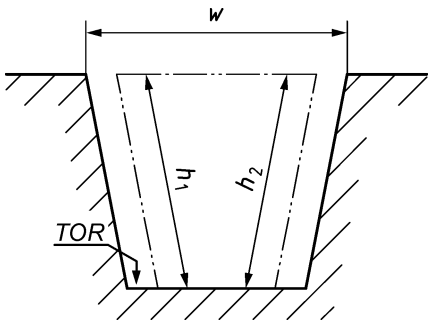

c) Deep trench envelope, $e = w + h_1 + h_2$

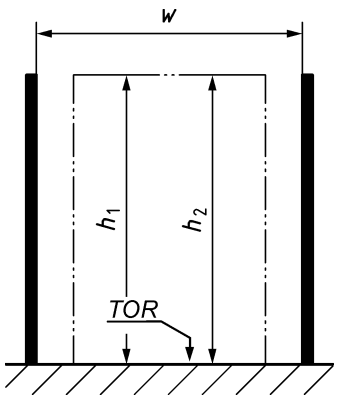

d) Tall barriers or buildings; envelope, $e = w + h_1 + h_2$

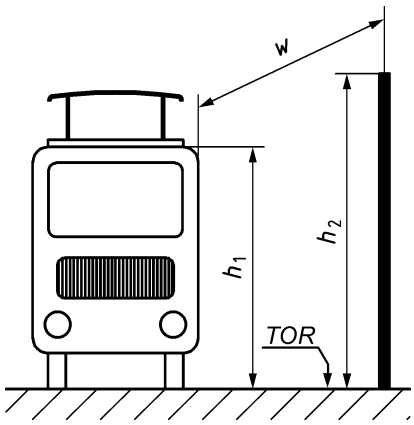

e) Train passing close to a noise barrier envelope, $e = w + h_1 + h_2$

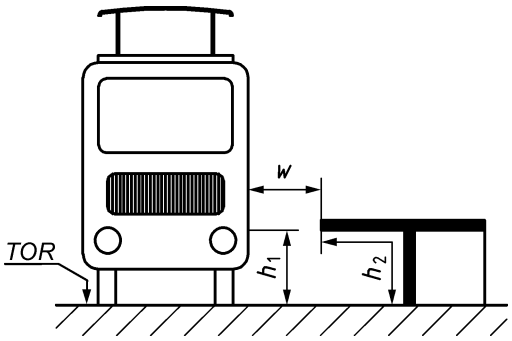

f) Train passing close to a platform at the station, $e = w + h_1 + h_2$

Key

TOR Top of Rail (railway surface)

w width of open space

Figure 1 — (not to scale) Sketch of the reverberant condition check in six cases

This European Standard introduces a specific quantity, called sound insulation index, to define the airborne sound insulation of a noise barrier. This quantity should not be confused with the sound reduction index used in building acoustics, sometimes also called transmission loss. Research studies suggest that a very good correlation exists

Documents
Document Sharing Hub
Full document details: BS EN 16272-6:2014

between data measured according to EN 16272-2 and data measured according to the method described in the present document.

This method may be used to qualify noise barriers for other applications, e.g. to be installed along roads or nearby industrial sites. In this case the single-number ratings should be calculated using an appropriate spectrum.

Documents
Document Sharing Hub
Full document details: BS EN 16272-6:2014

1 Scope

This European Standard describes a test method for measuring a quantity representative of the intrinsic characteristics of airborne sound insulation for railway noise barriers: the sound insulation index.

The test method is intended for the following applications:

— determination of the intrinsic characteristics of airborne sound insulation of noise barriers to be installed along railways, to be measured either on typical installations alongside railways or on a relevant sample section;

— determination of the *in situ* intrinsic characteristics of airborne sound insulation of noise barriers in actual use;

— comparison of design specifications with actual performance data after the completion of the construction work;

— verification of the long term performance of noise barriers (with a repeated application of the method);

— interactive design process of new products, including the formulation of installation manuals.

The test method is not intended for the following applications:

— determination of the intrinsic characteristics of airborne sound insulation of noise barriers to be installed in reverberant conditions, e.g. inside tunnels or deep trenches or under covers.

Results are expressed as a function of frequency in one-third octave bands, where possible, between 100 Hz and 5 kHz. If it is not possible to get valid measurement results over the whole frequency range indicated, the results will be given in a restricted frequency range and the reasons for the restriction(s) will be clearly reported.

All noise reducing devices different from noise barriers and related devices acting on airborne sound propagation, e.g. devices for attenuation of ground borne vibration and on board devices are out of the scope of this European Standard.

2 Normative references

The following documents, in whole or in part, are normatively referenced in this document and are indispensable for its application. For dated references, only the edition cited applies. For undated references, the latest edition of the referenced document (including any amendments) applies.

EN 16272-2, *Railway applications — Track — Noise barriers and related devices acting on airborne sound propagation — Test method for determining the acoustic performance — Part 2: Intrinsic characteristics — Airborne sound insulation in the laboratory under diffuse sound field conditions*

EN 16272-3-2, *Railway applications — Track — Noise barriers and related devices acting on airborne sound propagation — Test method for determining the acoustic performance — Part 3-2: Normalized railway noise spectrum and single number ratings for direct field applications*

EN 61672-1, *Electroacoustics — Sound level meters — Part 1: Specifications (IEC 61672-1)*

ISO/IEC Guide 98-3, *Uncertainty of measurement — Part 3: Guide to the expression of uncertainty in measurement (GUM:1995)*

3 Terms and definitions

For the purposes of this document, the following terms and definitions apply.

Documents
Document Sharing Hub

Full document details: BS EN 16272-6:2014

3.1
noise barrier
noise reducing device, which obstructs the direct transmission of airborne sound emanating from railways

Note 1 to entry: It may either span or overhang the railway.

Note 2 to entry: Noise barriers are generally made of acoustic and structural elements (3.3 and 3.4).

3.2
cladding
noise reducing device, which is attached to a wall or other structure and reduces the amount of sound reflected

Note 1 to entry: Claddings are generally made of acoustic and structural elements (3.3 and 3.4).

3.3
acoustic element
element whose primary function is to provide the acoustic performance of the device

3.4
structural element
element whose primary function is to support or hold in place acoustic elements

Note 1 to entry: In some noise barriers the acoustic function and the structural function cannot be clearly separated and attributed to different components.

3.5
added device
added component that influences the acoustic performance of the original noise-reducing device (acting primarily on the diffracted energy)

3.6
rail side exposure
use of the product as a noise barrier installed alongside railways

3.7
sound insulation index
result of airborne sound insulation test

Note 1 to entry: The sound insulation index is given by Formula (1).

3.8
reference height
h_S
height equal to half the height, h_B, of the noise barrier under test: $h_S = h_B/2$

Note 1 to entry: When the height of the device under test is greater than 4 m and, for practical reasons, it is not advisable to have a height of the source $h_S = h_B/2$, it is possible to have $h_S = 2$ m, accepting the corresponding low frequency limitation (see 4.5.8).

Note 2 to entry: See Figures 2 and 3.

3.9
source reference plane for sound insulation index measurements
plane facing the sound source side of the noise barrier and touching the most protruding parts of the device under test within the tested area

Note 1 to entry: The device under test includes both structural and acoustical elements.

Note 2 to entry: See Figures 2, 4 and 9.

Documents
Document Sharing Hub
Full document details: BS EN 16272-6:2014

3.10
microphone reference plane
plane facing the receiver side of the noise barrier and touching the most protruding parts of the device under test within the tested area

Note 1 to entry: The device under test includes both structural and acoustical elements.

Note 2 to entry: See Figures 4 and 9.

3.11
source reference position
position facing the side to be exposed to noise when the device is in place, located at the reference height h_s and placed so that its horizontal distance to the source reference plane is the reference distance d_s

Note 1 to entry: d_s = 1 m

Note 2 to entry: The actual dimensions of the loudspeaker used for the background research on which this European Standard is based are: 0,40 m x 0,285 m x 0,285 m (length x width x height).

Note 3 to entry: See Figures 2, 5, 8, and 9.

3.12
measurement grid for sound insulation index measurements
a vertical measurement grid constituted of nine equally spaced points. A microphone is placed at each point

Note 1 to entry: See Figures 3, 5, 6, 8, 9 and 5.5.

3.13
barrier thickness for sound insulation index measurements
distance t_B between the source reference plane and the microphone reference plane at a height equal to the reference height h_S

Note 1 to entry: See Figures 4, 8, and 9.

3.14
free-field measurement for sound insulation index measurements
measurement taken with the loudspeaker and the microphone in an acoustic free field in order to avoid reflections from any nearby object, including the ground

Note 1 to entry: See Figure 6.

3.15
Adrienne temporal window
well defined composite temporal window

Note 1 to entry: The Adrienne temporal window is described in 5.5.6.

3.16
background noise
noise coming from sources other than the source emitting the test signal

3.17
signal-to-noise ratio
S/N
difference in decibels between the level of the test signal and the level of the background noise at the moment of detection of the useful event (within the Adrienne temporal window)

Documents
Document Sharing Hub
Full document details: BS EN 16272-6:2014

3.18
impulse response
time signal at the output of a system when a Dirac function is applied to the input

Note 1 to entry: The Dirac function, also called δ function, is the mathematical idealization of a signal that is infinitely short in time which carries a unit amount of energy.

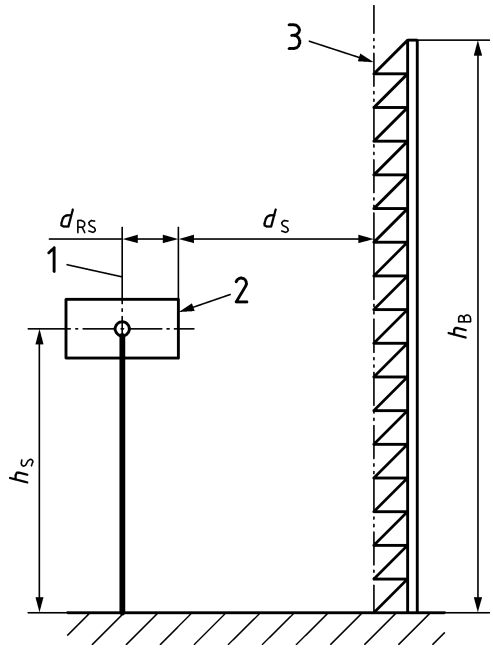

Key

1	axis of rotation	d_{RS}	distance between the axis of rotation and the loudspeaker front panel [m]
2	loudspeaker front panel	h_B	noise barrier height [m]
3	source reference plane	h_s	reference height [m]
d_S	reference distance [m]		

Figure 2 — (not to scale) Sketch of the loudspeaker in front of the noise barrier under test for sound insulation index measurements

Documents
Document Sharing Hub
Full document details: BS EN 16272-6:2014

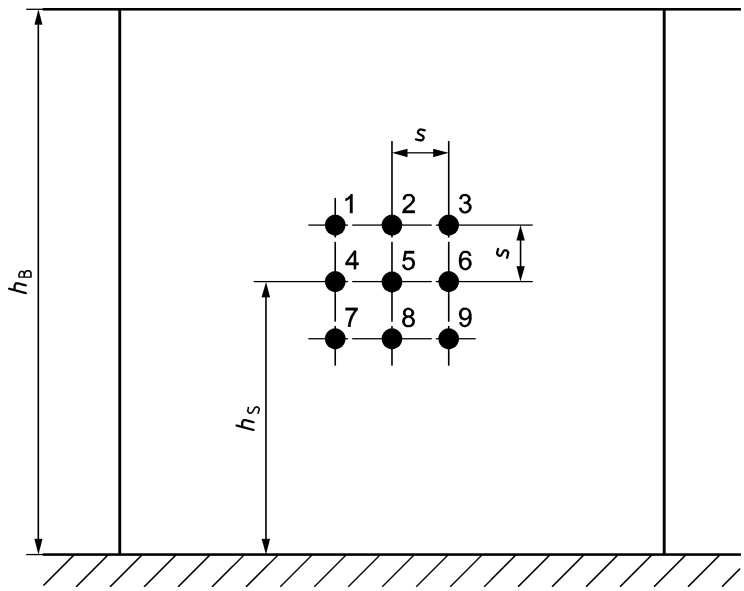

Key

h_B noise barrier height [m]

h_S reference height [m]

s half the side length of the measurement grid [m]

Figure 3 — Measurement grid for sound insulation index measurements (receiver side) and numbering of the measurement points (not to scale)

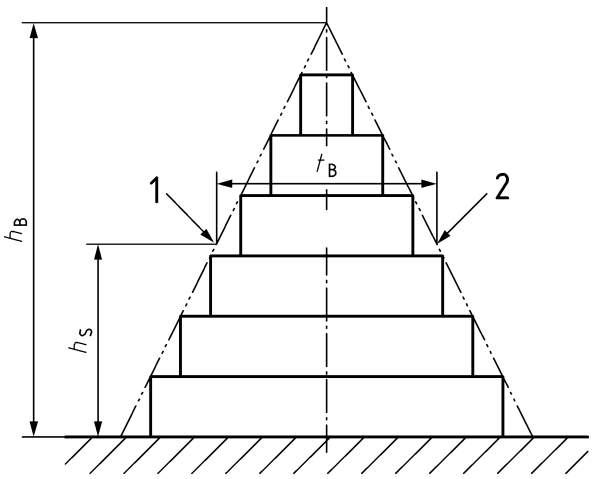

Key

1 sound source reference plane

2 microphone reference plane

h_B noise barrier height [m]

h_S reference height [m]

t_B noise barrier thickness [m]

Figure 4 — (not to scale) Sound source and microphone reference planes (side view)

Documents
Document Sharing Hub

Full document details: BS EN 16272-6:2014

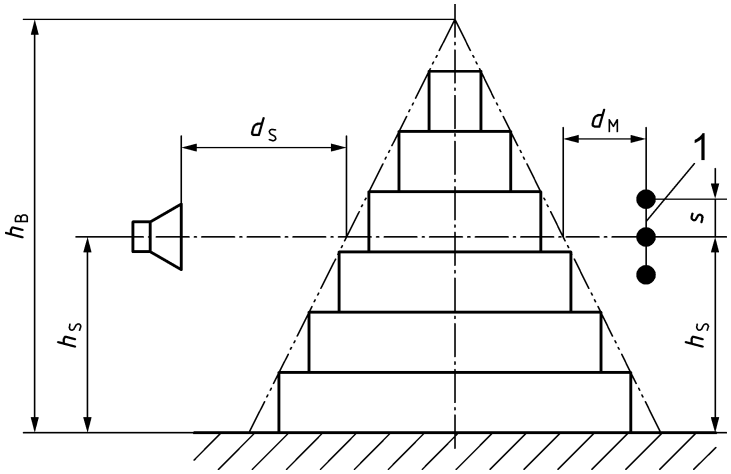

Key

1 measurement grid

h_B noise barrier height [m]

d_M horizontal distance from the measurement grid to the microphone reference plane [m]

h_S reference height [m]

d_S horizontal distance from the loudspeaker front panel to the source reference plane [m]

s half the side length of the measurement grid [m]

Figure 5 — (not to scale) Placement of the sound source and measurement grid for sound insulation index measurement (side view)

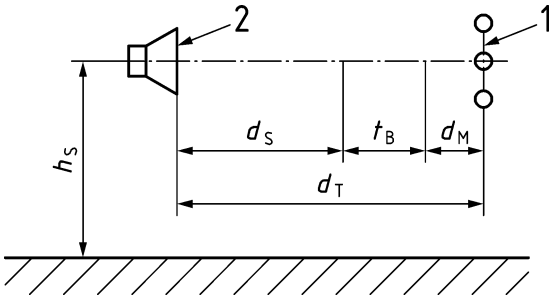

Key

1 measurement grid

2 loudspeaker front panel

d_M horizontal distance from the measurement grid to the microphone reference plane [m]

d_S horizontal distance from the loudspeaker front panel to the source reference plane [m]

d_T $d_T = d_S + t_B + d_M$ see Formula (3)

h_S reference height [m]

t_B noise barrier thickness [m]

Figure 6 — (not to scale) Sketch of the set-up for the reference "free-field" sound measurement for the determination of the sound insulation index

4 Symbols and abbreviations

For the purposes of this document, the following symbols and abbreviations apply.

Documents
Document Sharing Hub
Full document details: BS EN 16272-6:2014