BS EN 16273:2014

BSI Standards Publication

Railway applications — Track — Forged rail transitions

bsi.

...making excellence a habit.™

Document Sharing Hub

Full document details: BS EN 16273:2014

National foreword

This British Standard is the UK implementation of EN 16273:2014.

The UK participation in its preparation was entrusted to Technical Committee RAE/2, Railway Applications - Track.

A list of organizations represented on this committee can be obtained on request to its secretary.

This publication does not purport to include all the necessary provisions of a contract. Users are responsible for its correct application.

© The British Standards Institution 2014.
Published by BSI Standards Limited 2014

ISBN 978 0 580 85803 1
ICS 93.100

Compliance with a British Standard cannot confer immunity from legal obligations.

This British Standard was published under the authority of the Standards Policy and Strategy Committee on 31 December 2014.

Amendments/corrigenda issued since publication

Date	Text affected

Documents
Document Sharing Hub

Full document details: BS EN 16273:2014

EUROPEAN STANDARD

NORME EUROPÉENNE

EUROPÄISCHE NORM

EN 16273

December 2014

ICS 93.100

English Version

Railway applications - Track - Forged rail transitions

Applications ferroviaires - Voie - Rails forgés

Bahnanwendungen - Oberbau - Geschmiedete Schienenübergänge

This European Standard was approved by CEN on 25 October 2014.

CEN members are bound to comply with the CEN/CENELEC Internal Regulations which stipulate the conditions for giving this European Standard the status of a national standard without any alteration. Up-to-date lists and bibliographical references concerning such national standards may be obtained on application to the CEN-CENELEC Management Centre or to any CEN member.

This European Standard exists in three official versions (English, French, German). A version in any other language made by translation under the responsibility of a CEN member into its own language and notified to the CEN-CENELEC Management Centre has the same status as the official versions.

CEN members are the national standards bodies of Austria, Belgium, Bulgaria, Croatia, Cyprus, Czech Republic, Denmark, Estonia, Finland, Former Yugoslav Republic of Macedonia, France, Germany, Greece, Hungary, Iceland, Ireland, Italy, Latvia, Lithuania, Luxembourg, Malta, Netherlands, Norway, Poland, Portugal, Romania, Slovakia, Slovenia, Spain, Sweden, Switzerland, Turkey and United Kingdom.

EUROPEAN COMMITTEE FOR STANDARDIZATION
COMITÉ EUROPÉEN DE NORMALISATION
EUROPÄISCHES KOMITEE FÜR NORMUNG

CEN-CENELEC Management Centre: Avenue Marnix 17, B-1000 Brussels

© 2014 CEN All rights of exploitation in any form and by any means reserved worldwide for CEN national Members.

Ref. No. EN 16273:2014 E

Documents
Document Sharing Hub

Full document details: BS EN 16273:2014

Contents

Page

Foreword 4

Introduction 5

1 Scope 6

2 Normative references 6

3 Terms and definitions 6

4 Information to be supplied for approval 8
4.1 By the purchaser 8
4.2 By the manufacturer 8

5 Approval of the manufacturer 8

6 Requirements for the forging process 9
6.1 General 9
6.2 Forging parameters 9
6.3 Post heat treatment 9
6.4 Profile finishing 9
6.5 Cutting to length 9
6.6 Identification 9

7 Procedure approval 9
7.1 General 9
7.2 Test specimen preparation 10
7.3 Number of specimens 10
7.4 Non-destructive approval tests 10
7.4.1 Geometry and dimensions 10
7.4.2 Visual inspection 13
7.4.3 Surface finish 13
7.4.4 Dye penetrant (DPI) or magnetic particle inspection (MPI) 13
7.4.5 Ultrasonic testing (UT) 13
7.5 Destructive approval tests 14
7.5.1 Hardness distribution 14
7.5.2 Switch rails: hardness distribution in the rail head 16
7.6 Test report 18
7.7 Validity of approval 18

8 Production tests 18
8.1 Switches 18
8.1.1 General 18
8.1.2 Geometry and dimensions 19
8.1.3 Hardness testing 19
8.2 Transition rails 20
8.2.1 General 20
8.2.2 Hardness 20

Annex A (informative) Ultrasonic testing 22

A.1 Reference line (DAC) generation – reference block 22

A.2 Reference line (DAC) generation and acceptance criteria 23

Annex B (informative) Documentation of approval tests 24

Documents
Document Sharing Hub

Full document details: BS EN 16273:2014

B.1 Forged switch rails 24
B.1.1 General information 24
B.1.2 Geometry and dimensions 24
B.1.3 Dye penetrant (DPI) or magnetic particle inspection (MPI) 27
B.1.4 Ultrasonic testing (UT) 27
B.1.5 Hardness distribution on the surface 28
B.1.6 Test results of hardness distribution on the rail head 28
B.1.7 Test results of hardness distribution on the rail foot 30
B.2 Forged transition rails 32
B.2.1 General information 32
B.2.2 Geometry and dimensions 33
B.2.3 Dye penetrant (DPI) or magnetic particle inspection (MPI) 34
B.2.4 Ultrasonic testing (UT) 34
B.2.5 Hardness distribution on the surface 35
B.2.6 Test results of hardness distribution on the rail head 36
B.2.7 Test results of hardness distribution on the rail foot 36
Bibliography 38

AVA Documents
Document Sharing Hub

Full document details: BS EN 16273:2014

Foreword

This document (EN 16273:2014) has been prepared by Technical Committee CEN/TC 256 “Railway applications”, the secretariat of which is held by DIN.

This European Standard shall be given the status of a national standard, either by publication of an identical text or by endorsement, at the latest by June 2015 and conflicting national standards shall be withdrawn at the latest by June 2015.

Attention is drawn to the possibility that some of the elements of this document may be the subject of patent rights. CEN [and/or CENELEC] shall not be held responsible for identifying any or all such patent rights.

This document has been prepared under a mandate given to CEN by the European Commission and the European Free Trade Association.

According to the CEN-CENELEC Internal Regulations, the national standards organizations of the following countries are bound to implement this European Standard: Austria, Belgium, Bulgaria, Croatia, Cyprus, Czech Republic, Denmark, Estonia, Finland, Former Yugoslav Republic of Macedonia, France, Germany, Greece, Hungary, Iceland, Ireland, Italy, Latvia, Lithuania, Luxembourg, Malta, Netherlands, Norway, Poland, Portugal, Romania, Slovakia, Slovenia, Spain, Sweden, Switzerland, Turkey and the United Kingdom.

Documents
Document Sharing Hub
Full document details: BS EN 16273:2014

Introduction

This European Standard has three main topics:

— requirements of a forged part;

— procedure approval;

— forged rail production following approval.

This European Standard satisfies the needs of the railway authority and the manufacturer should achieve the specified requirements of this standard.

Documents
Document Sharing Hub

Full document details: BS EN 16273:2014

1 Scope

This European Standard specifies the requirements for the approval of a process wherein a rail of one profile has part of its length forged to a different profile, together with the requirements for subsequent forging production and product acceptance.

This European Standard applies to new railway rails according to EN 13674-1, and to switch and crossing rails used in conjunction with railway rails 46 kg/m and above according to EN 13674-2, to be welded or fish plated to make up switch rails or transition rails intended for use on railway infrastructures.

2 Normative references

The following documents, in whole or in part, are normatively referenced in this document and are indispensable for its application. For dated references, only the edition cited applies. For undated references, the latest edition of the referenced document (including any amendments) applies.

EN 13232–5:2005+A1:2011, *Railway applications – Track – Switches and crossings – Part 5: Switches*

EN 13674-1:2011, *Railway applications – Track – Rail – Part 1: Vignole railway rails 46 kg/m and above*

EN 13674-2, *Railway applications – Track – Rail – Part 2: Switch and crossing rails used in conjunction with Vignole railway rails 46 kg/m and above*

EN ISO 3452-1, *Non-destructive testing – Penetrant testing – Part 1: General principles (ISO 3452-1)*

EN ISO 9934 (all parts), *Non-destructive testing – Magnetic particle testing (ISO 9934)*

3 Terms and definitions

For the purposes of this document, the following terms and definitions apply.

3.1
manufacturer
company that produces forged switch and transition rails

3.2
purchaser
buyer of the forged switch or transition rails

3.3
railway infrastructure
permanent way of national or private railways

3.4
specimen
portion detached from a forged rail transition and prepared as required for testing

3.5
profile finishing
operation by which the rail or relevant part of the component is returned to required profile

Note 1 to entry: This operation can be by grinding, milling, planing or any other suitable means.

Documents
Document Sharing Hub
Full document details: BS EN 16273:2014

3.6
finished condition
finished component

3.7
railway authority (RA)
either the railway regulator or the owner of the railway infrastructure or the custodian with a delegated responsibility for a railway infrastructure

3.8
forged switch rail – flexible switch rail
the switch rail in the movable area of the switch is made of one profile only. This can be either a standard rail profile or a special profile

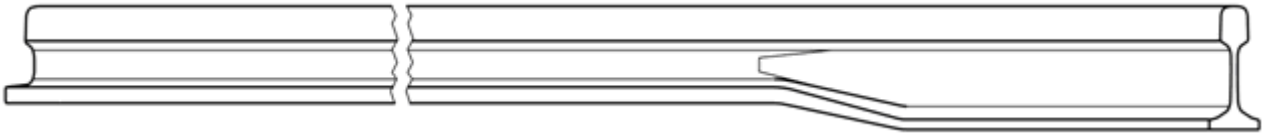

Figure 1 — Forged switch rail – flexible switch rail

3.9
forged switch rail – spring rail switch – rail
the switch rail in the movable area of the switch is made of two different profiles. The transition and the weld between one to the other profile takes place in the movable part of the switch rail and can be either a standard rail profile or a special profile

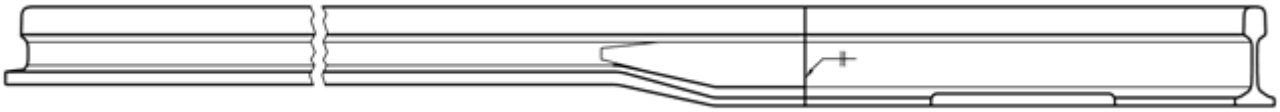

key

Flash butt weld

Figure 2 — Forged switch rail – spring rail switch – rail

3.10
forged switch rail – forged part
the forged part is the end section of a switch rail with the transition. It is made of one profile only

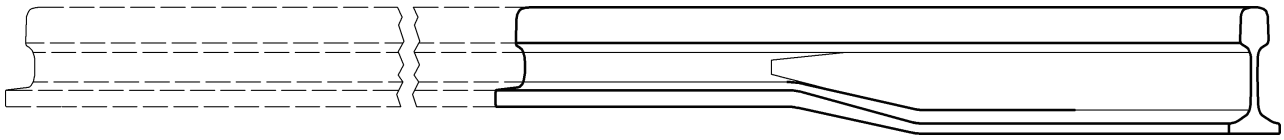

Figure 3 — Forged switch rail – forged part

Documents
Document Sharing Hub
Full document details: BS EN 16273:2014

3.11
forged transition rail
part of a symmetrical vignole rail profile 1 forged to another symmetrical vignole rail profile 2

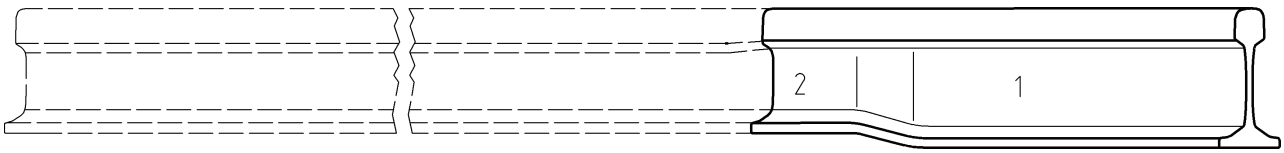

Figure 4 — Forged transition rail

3.12
forged rail transition
a rail of one profile having part of its length forged to a different profile. A rail with an asymmetrical profile forged to a symmetrical profile is a forged switch rail (see 3.8, 3.9 and 3.10). A rail with a symmetrical profile forged to another symmetrical profile is termed a forged transition rail (see 3.11)

3.13
heat affected zone (HAZ)
part of the rail heated to a temperature affecting the hardness

4 Information to be supplied for approval

4.1 By the purchaser

The following information shall be supplied by the purchaser, agreed with the manufacturer and shall be fully documented:

— the initial and final rail profiles, length of the switch rail or transition rail and geometrical requirements of the rail transition;

— the rail grade;

— the profile class of the rail leg-end extension as specified in EN 13674-1 and EN 13674-2.

4.2 By the manufacturer

The following information shall be supplied by the manufacturer, agreed with the purchaser and shall be fully documented:

— a drawing of the switch or transition rail.

5 Approval of the manufacturer

The manufacturer shall operate an independently approved quality assurance system or an other quality assurance system accepted by the purchaser.

Documents
Document Sharing Hub
Full document details: BS EN 16273:2014

6 Requirements for the forging process

6.1 General

All heating, forging, cooling and dressing shall be carried out in a controlled process.

6.2 Forging parameters

The forging process and any post heat treatment, including the working ranges, shall be determined during procedural trials. Once approval has been granted they shall not be changed without prior purchaser approval.

The parameters shall be monitored and checked against approval limits. These records shall be referenced to the relevant products.

6.3 Post heat treatment

Post heating or controlled post cooling may be required and shall in such case be monitored.

6.4 Profile finishing

The finishing shall be carried out in the longitudinal direction using machining and optionally additional grinding. The roughness limit shall be maximum 6,3 Ra.

The profile finishing shall not cause any thermal or mechanical damage. The rail profile in the wheel contact area shall be maintained during profile finishing.

The profile finishing shall not end in the zone S (see Figure 8).

6.5 Cutting to length

The switch rails shall be cut square, in accordance with Table 9 in EN 13674-1:2011, to the requested length. Burrs shall be removed from all edgings. Flame cutting is not allowed for the final cut.

6.6 Identification

The identification shall permit traceability to production records. Every forged rail blank shall be encoded by:

— the sign of the manufacturer;

— the year of manufacturing;

— the identification number for the forged part.

The identification shall permit the traceability of the product for at least the guarantee period.

7 Procedure approval

7.1 General

Procedure approval tests shall be done for the production of switch and transition rails by the manufacturer as described in chapter 7 of this standard. For grade R260 rails, approval is granted by grade (not per profile). For grade R350HT rails, approval is granted by grade (not per profile) and by rail manufacturer.

Documents
Document Sharing Hub
Full document details: BS EN 16273:2014

Procedure approval shall be carried out by testing samples produced in accordance with this standard; the samples shall be representative of those carried out in production. One failure during the approval tests described in 7.4 and 7.5 involves the rejection of the approval.

Refer to 7.7 for re-qualification requirements.

7.2 Test specimen preparation

The test specimens shall be produced and inspected by the same method used for production pieces.

7.3 Number of specimens

Four test specimens in the finished condition (see 3.6) shall be manufactured.

7.4 Non-destructive approval tests

7.4.1 Geometry and dimensions

7.4.1.1 Switch rails

The dimension of the forged rail head and the profile of the vignole rail at the heel of the switch rail shall comply with the tolerances in Table 1.

Figure 5 indicates the parts of the forged rail that shall be checked according to Table 1.

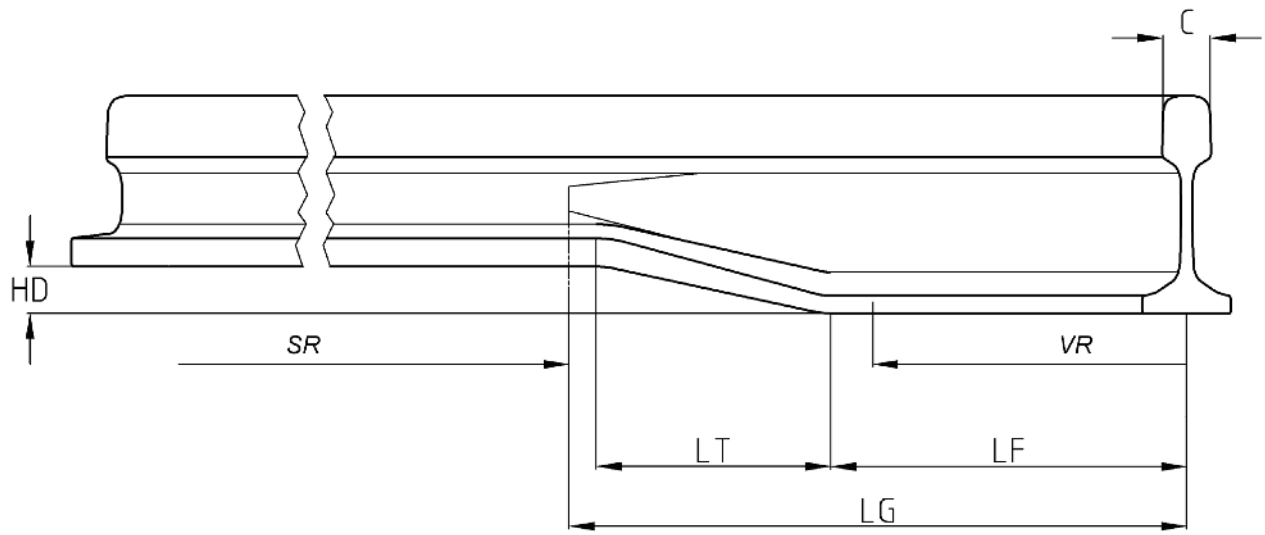

Key

SR switch rail

VR vignole rail

NOTE For further terms shown in this Figure, see Table 1.

Figure 5 — Dimensions of forged switch rail

Documents
Document Sharing Hub
Full document details: BS EN 16273:2014

Table 1 — Length and tolerances for the forged switch rail

Dimension	**Length [mm]**	**Measurement equipment**
Length of the forged rail transition **LT**	Minimum 3 x HD	Measuring stick, tape or gauge
Dimension	**Admissible tolerance [mm]**	**Measurement equipment**
Length that ends where the switch rail profile begins **LG**	±20	Measuring stick, tape or gauge
Length of the vignole part measured on the foot **LF**	±20	Measuring stick, tape or gauge
Vertical alignment across the running surface along the longitudinal centre line starting at the forged rail end until 1500 mm, measured by moving a 1 m straight edge and a thickness gauge.	- 0,1 / + 0,2	1 m straight edge and a thickness gauge
Horizontal alignment on the running edge at 14 mm below the running surface, starting at the forged rail end until 1500 mm measured by moving a 1 m straight edge and a thickness gauge.	±0,4	1 m straight edge and a thickness gauge
Head profile concavity (EN 13232–5:2005+A1:2011, Figure 18) **HC**	An area of concavity may exist only on the opposite of the running edge. This shall not exceed 2 mm	1 m straight edge and a thickness gauge
Vertical twist (twist base length 1 m)	±0,5	Method agreed between the manufacturer and the purchaser
Head profile **C**	+0,6 / −0,3	Gauge E.4 according to EN 13674–1:2011 dependent on the rail profile
Height difference from one rail foot to the other rail foot (Figure 5) **HD**	±1,1	Method agreed between the manufacturer and the purchaser
Other measuring methods can be used but in case of dispute, the equipment described above shall be used.		

Other tolerances for the vignole profile shall be in accordance with EN 13674-1:2011, Table 7, profile class X.

Figure 6 shows the definitions of the algebraic sign in the alignment measurement.

Documents
Document Sharing Hub
Full document details: BS EN 16273:2014