BS EN 16404:2016

BSI Standards Publication

Railway applications — Re-railing and recovery requirements for railway vehicles

bsi.

...making excellence a habit.™

Document Sharing Hub

National foreword

This British Standard is the UK implementation of EN 16404:2016. It supersedes BS EN 16404:2014 which is withdrawn.

The UK participation in its preparation was entrusted to Technical Committee RAE/3/-/10, Railway applications - Vehicle lifting.

A list of organizations represented on this committee can be obtained on request to its secretary.

This publication does not purport to include all the necessary provisions of a contract. Users are responsible for its correct application.

© The British Standards Institution 2016.
Published by BSI Standards Limited 2016

ISBN 978 0 580 89047 5

ICS 45.060.01

Compliance with a British Standard cannot confer immunity from legal obligations.

This British Standard was published under the authority of the Standards Policy and Strategy Committee on 29 February 2016.

Amendments/corrigenda issued since publication

Date	Text affected

Documents
Document Sharing Hub

Full document details: BS EN 16404:2016

EUROPEAN STANDARD

NORME EUROPÉENNE

EUROPÄISCHE NORM

EN 16404

January 2016

ICS 45.060.01

Supersedes EN 16404:2014

English Version

Railway applications - Re-railing and recovery requirements for railway vehicles

Applications ferroviaires - Exigences relatives au réenraillement et au rétablissement de véhicules ferroviaires

Bahnanwendungen - Anforderungen für das Aufgleisen und Bergen von Schienenfahrzeugen

This European Standard was approved by CEN on 22 November 2015.

CEN members are bound to comply with the CEN/CENELEC Internal Regulations which stipulate the conditions for giving this European Standard the status of a national standard without any alteration. Up-to-date lists and bibliographical references concerning such national standards may be obtained on application to the CEN-CENELEC Management Centre or to any CEN member.

This European Standard exists in three official versions (English, French, German). A version in any other language made by translation under the responsibility of a CEN member into its own language and notified to the CEN-CENELEC Management Centre has the same status as the official versions.

CEN members are the national standards bodies of Austria, Belgium, Bulgaria, Croatia, Cyprus, Czech Republic, Denmark, Estonia, Finland, Former Yugoslav Republic of Macedonia, France, Germany, Greece, Hungary, Iceland, Ireland, Italy, Latvia, Lithuania, Luxembourg, Malta, Netherlands, Norway, Poland, Portugal, Romania, Slovakia, Slovenia, Spain, Sweden, Switzerland, Turkey and United Kingdom.

EUROPEAN COMMITTEE FOR STANDARDIZATION
COMITÉ EUROPÉEN DE NORMALISATION
EUROPÄISCHES KOMITEE FÜR NORMUNG

CEN-CENELEC Management Centre: Avenue Marnix 17, B-1000 Brussels

© 2016 CEN All rights of exploitation in any form and by any means reserved worldwide for CEN national Members.

Ref. No. EN 16404:2016 E

Documents
Document Sharing Hub

Full document details: BS EN 16404:2016

Contents

Page

European foreword ... 4

Introduction ... 5

1 Scope ... 6

2 Normative references ... 6

3 Terms and definitions ... 7

4 Requirements for the re-railing and recovery of rail vehicles ... 9
4.1 General requirements for all vehicles ... 9
4.2 Required lifting operations ... 9
4.2.1 Lifting operations for all rail vehicles ... 9
4.2.2 Lifting operations for articulated vehicles and/or fixed formations ... 10
4.2.3 Provision of lifting points ... 11
4.2.4 Requirements for marking and documentation ... 11
4.3 Vehicle masses for lifting ... 11

5 Vehicle interface and functional requirements for lifting, re-railing and support ... 12
5.1 Lifting, re-railing and support points ... 12
5.1.1 Minimum functional requirements for jacking ... 12
5.1.2 General design requirements for lifting point locations ... 13
5.1.3 Longitudinal location of jacking points ... 13
5.1.4 Jacking equipment clearance zones ... 14
5.1.5 Lifting requirements when using cranes ... 17
5.1.6 Re-railing position design space envelopes ... 17
5.1.7 Additional clearances required for single end lifting ... 18
5.1.8 Support points ... 18
5.1.9 Bogie support points ... 18
5.2 Jacking point geometry ... 19
5.3 Lifting brackets ... 19
5.4 Securing of running gear to the underframe ... 20

6 Design load cases for re-railing and recovery equipment ... 20
6.1 General design principles ... 20
6.2 Workshop vehicle lifting ... 21
6.3 Re-railing and recovery design scenarios ... 21
6.3.1 Design scenario 1 ... 21
6.3.2 Design scenario 2 ... 21
6.3.3 Design scenario 3 ... 22
6.4 Lifting brackets ... 22
6.4.1 Lifting bracket structural design requirements ... 22
6.4.2 Lifting bracket strength requirements ... 23

7 Markings for lifting points ... 24

8 Documentation for re-railing and recovery ... 24
8.1 General documentation requirements ... 24
8.2 Recovery Risk Assessment ... 24
8.3 Lifting instructions ... 25
8.4 Lifting diagram ... 25

Documents
Document Sharing Hub

Full document details: BS EN 16404:2016

8.4.1 General lifting diagram requirements 25
8.4.2 Side elevation 26
8.4.3 End elevation and/or cross-sections 26
8.4.4 Mass data 27

9 Validation 27

Annex A (normative) Space envelopes for re-railing equipment 28

Annex B (normative) Standard lifting bracket (100 kN to 220 kN) 31

Annex C (normative) Standard lifting bracket (for up to 335 kN) 36

Annex D (normative) Lifting bracket (for up to 170 kN) 41

Annex E (normative) Lifting bracket (for up to 340 kN) 44

Annex F (informative) Migration rule for this European Standard 48
Annex ZA (informative) Relationship between this European Standard and the Essential Requirements of EU Directive 2008/57/EC 49

Documents
Document Sharing Hub

Full document details: BS EN 16404:2016

European foreword

This document (EN 16404:2016) has been prepared by Technical Committee CEN/TC 256 “Railway applications”, the secretariat of which is held by DIN.

This European Standard shall be given the status of a national standard, either by publication of an identical text or by endorsement, at the latest by July 2016, and conflicting national standards shall be withdrawn at the latest by July 2016.

Attention is drawn to the possibility that some of the elements of this document may be the subject of patent rights. CEN [and/or CENELEC] shall not be held responsible for identifying any or all such patent rights.

This document supersedes EN 16404:2014.

The main changes from the previous edition are listed below:

— clarification of the use of re-railing beams and/or support points;

— clarification of jacking equipment clearances;

— additional requirements for lifting low floor vehicles;

— definition of smaller jack space envelopes for jacks up to 20 t capacity;

— requirements for the use of jack adaptors with lifting brackets;

— lifting requirements when using cranes;

— Annex E: Definition of a non-standard 340 kN lifting bracket as used on GB locomotives.

This document has been prepared under a mandate given to CEN by the European Commission and the European Free Trade Association, and supports essential requirements of EU Directive 2008/57/EC.

For relationship with EU Directive 2008/57/EC, see informative Annex ZA, which is an integral part of this document.

According to the CEN-CENELEC Internal Regulations, the national standards organizations of the following countries are bound to implement this European Standard: Austria, Belgium, Bulgaria, Croatia, Cyprus, Czech Republic, Denmark, Estonia, Finland, Former Yugoslav Republic of Macedonia, France, Germany, Greece, Hungary, Iceland, Ireland, Italy, Latvia, Lithuania, Luxembourg, Malta, Netherlands, Norway, Poland, Portugal, Romania, Slovakia, Slovenia, Spain, Sweden, Switzerland, Turkey and the United Kingdom.

Documents
Document Sharing Hub
Full document details: BS EN 16404:2016

Introduction

Rail vehicles are designed so that re-railing and recovery operations after a derailment or accident can be safely undertaken without exposing persons to undue risk during lifting and jacking operations.

For rolling stock of interoperable trains there is a need to define common requirements in terms of lifting and jacking operations, equipment space envelopes and lifting accessories.

Foreseeable factors that can influence a re-railing or recovery operation include:

— final vehicle position relative to the track;

— weight transfer due to final vehicle orientation (inclination or roll);

— vehicle load, possible overloading or uneven loading;

— load movement or shifting;

— embedding of parts of the vehicle in the ground;

— sinking of jacks (soft ground);

— structural distortion/damage;

— jerking or snatching of lifting equipment.

The majority of these factors cannot be quantified either in advance or during a recovery operation and therefore precise requirements cannot be set out in this European Standard and accordingly design scenarios are used. The resulting requirements together with competent persons undertaking the re-railing or recovery operation using the documentation specified are considered to be sufficient to ensure that the overall objectives are satisfied.

Documents
Document Sharing Hub
Full document details: BS EN 16404:2016

1 Scope

This European Standard is applicable to all railway vehicles that will operate under the Interoperability Directives taking into consideration the recommendations given in Annex F on the application of the standard (migration rule).

Rolling stock of the following types are excluded from the scope of this draft European Standard:

— metros, tramways, and other light rail vehicles;

— vehicles for the operation of local, urban or suburban passenger services on networks that are functionally separate from the rest of the railway system;

— vehicles exclusively used on privately owned railway infrastructure that exist solely for use by the owner for its own freight operations;

— vehicles reserved for a strictly local, historical or touristic use.

On-track machines are in the scope of this European Standard only when in transport (running) configuration on their own rail wheels, either self-propelled or hauled.

However, the requirements may be appropriate for other applications that have similar operational conditions. It specifies the principles and processes to be followed to achieve satisfactory arrangements for re-railing or recovery of railway vehicles and to validate the design against the relevant performance and safety requirements.

The interface between the re-railing and recovery equipment and the vehicle structure is considered as the interface between the jack contact faces or the lifting bracket contact areas. The structural requirements for the vehicle structure are set out in EN 12663-1 and EN 12663-2.

NOTE Railway vehicles that will operate under the Interoperability Directives correspond to the categories L, P-I, P-II, F-I and F-II defined in EN 12663–1.

2 Normative references

The following documents, in whole or in part, are normatively referenced in this document and are indispensable for its application. For dated references, only the edition cited applies. For undated references, the latest edition of the referenced document (including any amendments) applies.

EN 12663-1, *Railway applications — Structural requirements of railway vehicle bodies — Part 1: Locomotives and passenger rolling stock (and alternative method for freight wagons)*

EN 12663-2, *Railway applications - Structural requirements of railway vehicle bodies - Part 2: Freight wagons*

EN 13155, *Cranes — Safety — Non-fixed load lifting attachments*

EN 15663, *Railway applications - Definition of vehicle reference masses*

EN 15877-1, *Railway applications - Marking on railway vehicles - Part 1: Freight wagons*

EN 15877-2, *Railway applications - Markings of railway vehicles - Part 2: External markings on coaches, motive power units, locomotives and on-track machines*

EN 22768-1, *General tolerances - Part 1: Tolerances for linear and angular dimensions without individual tolerance indications (ISO 2768-1)*

Documents
Document Sharing Hub
Full document details: BS EN 16404:2016

3 Terms and definitions

For the purposes of this document, the following terms and definitions apply.

3.1
articulated vehicle with shared running gear
system of articulation where each vehicle has its own secondary suspension but shares running gear (often referred to as Jacobs bogies)

Note 1 to entry: Typically each car body is supported at 4 points. Trains made up of vehicles of this type are a particular type of fixed formation train.

3.2
articulated vehicles with three point support
system of articulation where each vehicle has one bogie complete with its own secondary suspension and at the other end a single point connection to the adjacent vehicle in the train

Note 1 to entry: Trains made up of vehicles of this type are a particular type of fixed formation train.

3.3
fixed formation
train formation that can only be reconfigured in a workshop environment

Note 1 to entry: A fixed formation train can be made up of either articulated or otherwise conventional vehicles.

3.4
lifting
action of raising or lowering a vehicle

3.4.1
crane lifting
action of raising or lowering a vehicle by pulling upwards from above using appropriate equipment such as cranes

3.4.2
jacking
action of raising or lowering a vehicle by pushing upwards from underneath using appropriate equipment such as jacks

3.5
lifting point
particular points provided on the car body and/or running gear to position or locate appropriate equipment to raise or lower a vehicle using either cranes or jacks

3.5.1
crane lifting point
particular points provided on the car body and/or running gear to position or locate appropriate equipment to raise or lower a vehicle using cranes

3.5.2
jacking point
particular points provided on the car body and/or running gear to position or locate appropriate equipment to raise or lower a vehicle using jacks

AVA Documents
Document Sharing Hub

Full document details: BS EN 16404:2016

3.6
lifting bracket
removable item of equipment that provides the functionality of a lifting point when attached to the vehicle using a lifting pocket

3.6.1
crane lifting bracket
removable item of equipment that provides the functionality of a crane lifting point when attached to the vehicle using a lifting pocket

3.6.2
jacking bracket
removable item of equipment that provides the functionality of a jacking point when attached to the vehicle using a lifting pocket

3.7
lifting and jacking bracket
removable item of equipment that provides the functionality of both a jacking and a crane lifting point when attached to the vehicle using a lifting pocket

3.8
lifting pocket
recess or other interface on the vehicle structure intended for the attachment of a lifting bracket

Note 1 to entry : This item interfaces with a lifting bracket to form a lifting point.

3.9
On-track Machines
OTM
mobile railway infrastructure construction and maintenance equipment

3.10
re-railing
operation consisting of raising and translating a derailed railway vehicle in order to put it back on the rails

Note 1 to entry: This operation is carried out at the site of the incident, by means of rescue equipment used by specialist rescue teams.

3.11
re-railing beam
beam that can be placed transversally beneath a derailed vehicle that can be used to support and traverse re-railing equipment (jacks) and thereby translate the vehicle as part of a re-railing operation

3.12
re-railing position
location or group of locations on the underframe where a re-railing beam, roller carriages and jacks can be located to permit re-railing

Note 1 to entry: This is termed 're-railing place' in WAG TSI.

Documents
Document Sharing Hub
Full document details: BS EN 16404:2016

3.13
recovery
process of clearing the railway line of a vehicle that has been immobilized as a result of collision, derailment, accident or other incident

3.14
running gear
wheelsets, bogies and associated suspension components

Note 1 to entry : For this standard, running gear denotes wheelsets and suspension elements which have significant additional movement relative to the vehicle car body and may therefore require securing.

3.15
single end lift
vehicle lifting activity where the lifting equipment is employed at one end of a railway vehicle with the other end remaining supported by a bogie/wheelset in contact with the rails or ground

3.16
support point
designated points on a vehicle which are suitable for supporting the vehicle during or after a lifting operation

Note 1 to entry: Support points can be either lifting points or other points designated for the purpose.

3.17
vehicle end
longitudinal position between the centre of the vehicle and the end of the vehicle

3.18
wheelskate
device for rescuing vehicles where a wheelset is not fit to rotate, by lifting the affected wheelset and providing an alternative means of support and guidance in order to facilitate movement to a repair location

4 Requirements for the re-railing and recovery of rail vehicles

4.1 General requirements for all vehicles

It shall be possible to safely lift or jack a vehicle for re-railing or recovery purposes (following a derailment or some other accident or incident) using designated lifting points.

Requirements for the provision or type of lifting points for maintenance purposes are outside the scope of this European Standard though the same locations can be used for both purposes, subject to the respective design criteria being satisfied.

4.2 Required lifting operations

4.2.1 Lifting operations for all rail vehicles

Rail vehicles shall be designed for:

— lifting at the end or near the end of a rail vehicle with the other end supported by the vehicle suspension, or in the case of articulated vehicles, depending on the system of articulation used, possibly supported by an adjacent vehicle,

— lifting of the complete vehicle.

Documents
Document Sharing Hub
Full document details: BS EN 16404:2016

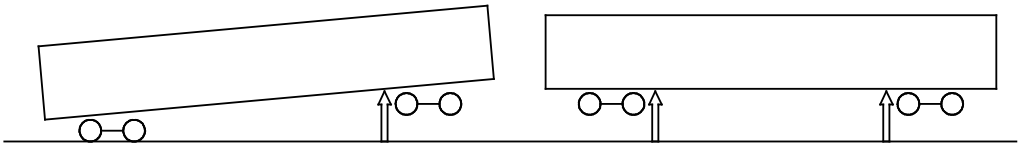

Figure 1 — Conventional vehicles: example of single end and full vehicle lifting

It shall be possible to lift a rail vehicle for re-railing or recovery purposes with the running gear secured to the car body (see 5.4).

For re-railing or recovery, it shall be possible to raise or lower a vehicle end or a complete vehicle using only jacking equipment (and lifting brackets if these are required).

NOTE For re-railing and recovery operations, lifting is undertaken by designated personnel who are trained and qualified by knowledge and practical experience to enable the re-railing and recovery operations to be carried out in accordance with the re-railing and recovery instructions for the vehicle (see Clause 8).

4.2.2 Lifting operations for articulated vehicles and/or fixed formations

For articulated vehicles and/or fixed formations it shall be possible to simultaneously lift the end or ends of adjacent vehicles in order to achieve the objectives set out above for lifting vehicles (see Figure 2 and Figure 3). Any additional requirements shall be included in the recovery documentation (see Clause 8).

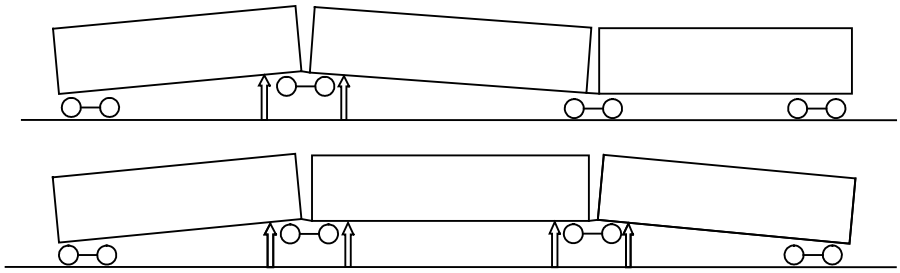

Figure 2 — Articulated vehicles with shared running gear: example of single end and full vehicle lifting

For articulated vehicles with three point support it is permissible for lifting loads to be transferred to an adjacent vehicle through the articulation joint, for example as indicated in Figure 3.

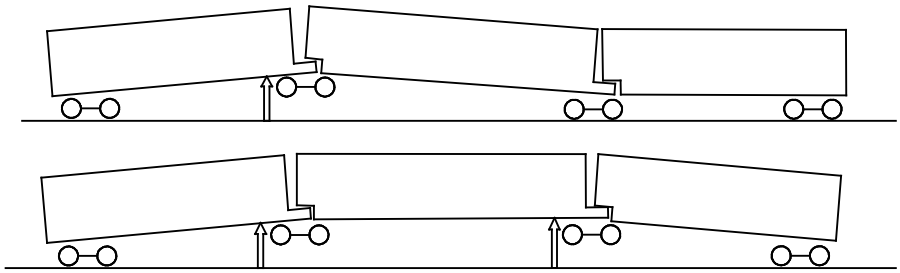

Figure 3 — Articulated vehicles with three point support: example of single end and full vehicle lifting

Documents
Document Sharing Hub
Full document details: BS EN 16404:2016

4.2.3 Provision of lifting points

Lifting points for re-railing and recovery shall be provided by:

— the provision of dedicated lifting points for re-railing and recovery,

and/or

— the use of lifting points which are also intended for maintenance purposes,

and/or

— removable lifting brackets with compatible attachment points or lifting pockets.

In all cases conformity with the requirements of this European Standard shall be demonstrated.

Permanent built-in lifting points for re-railing and recovery are recommended. In particular, it is recommended that freight wagons are designed to not require the use of lifting brackets for re-railing or recovery.

For heavy vehicles, for example locomotives, fully loaded freight vehicles or On-track Machines, the vehicle should be lifted using the running gear supporting the car body instead of lifting the vehicle with the running gear suspended from the car body structure to avoid structural collapse or damage.

If permanent built-in lifting points for re-railing or recovery are not provided for some or all vehicle lifting positions, attachment points or lifting pockets shall be provided to allow removable lifting brackets to be fitted in accordance with the requirements of 5.3 and 6.4.

4.2.4 Requirements for marking and documentation

Each lifting point shall be marked in accordance with the requirements of Clause 7 to clearly identify the intended function or functions of the lifting point.

4.3 Vehicle masses for lifting

The minimum vehicle mass, denoted MV, shall be the design mass in working order as defined by EN 15663, less the mass of any staff.

The maximum vehicle mass, denoted MC, to be used to determine the loads used in the design of lifting points, shall be the design mass under normal payload for the vehicle as defined by EN 15663, less the mass of any passengers and staff.

NOTE 1 For passenger vehicles, as defined in EN 15663, luggage mass is included. It is assumed that for a recovery operation while the passengers and train crew will have been evacuated, all other items remain on the vehicle.

NOTE 2 For freight vehicles, as set out in EN 15663, the maximum vehicle mass is the vehicle mass in working order plus the maximum payload specified for the vehicle. For freight vehicles, staff and/or passenger masses are zero.

Documents
Document Sharing Hub
Full document details: BS EN 16404:2016

5 Vehicle interface and functional requirements for lifting, re-railing and support

5.1 Lifting, re-railing and support points

5.1.1 Minimum functional requirements for jacking

In accordance with the requirements set out in 4.2, at each end of a vehicle it shall be demonstrated that the following sequence of re-railing operations can be undertaken safely:

— raise the end of the vehicle;

— support the raised vehicle;

— install a re-railing beam, roller carriages and traversing equipment;

— raise and support the vehicle on the re-railing beam and traverse as required;

— lower the vehicle to place back on the rails;

— remove all re-railing equipment.

These operations may be accomplished using any combination of the available options for re-railing positions and lifting points.

There shall be at least one pre-determined re-railing position at each vehicle end where running gear is attached.

A re-railing position shall allow the end of a rail vehicle to be safely lifted and traversed (moved laterally) by the use of either:

— a single pair of jacking points, a re-railing beam, roller carriages and jacks,

or

— a combination of vehicle jacking points and support points for use with a re-railing beam and roller carriages (except freight wagons constructed in accordance with Annex C of the Freight Wagons TSI).

If a combination of jacking and support points is used, the jacking and support positions are individually subject to the design space envelope requirements set out in this document. It is recommended that in addition the relative location of the jacking and support positions is optimised by consideration of:

— the intended use of the re-railing equipment,

— access requirements for the re-railing equipment,

— the position of the running gear,

— the rigidity of the vehicle structure.

Requirements for the combined use of re-railing beams and jacking equipment are set out in 5.1.6.

Requirements for support points are set out in 5.1.8.

Documents
Document Sharing Hub
Full document details: BS EN 16404:2016

5.1.2 General design requirements for lifting point locations

There shall be a minimum of four lifting points on the vehicle car body, arranged as two pairs, with at least one pair located at each vehicle end.

NOTE Subject to the approach adopted, a greater number of lifting points might be required to ensure the requirements of 5.1.1 are fulfilled.

It is recommended that in the vicinity of each set of running gear two pairs of lifting points are provided.

Additional lifting points may be provided subject to conformity with the applicable requirements set out in this European Standard. The number, position and heights of additional lifting points shall be part of the vehicle specification.

Lifting points provided for a full vehicle lift shall also be suitable for single end lifting.

For articulated vehicles at positions where the running gear is shared, lifting points shall be arranged to allow adjacent vehicle ends to be lifted simultaneously.

For lifting points at re-railing positions, requirements for maximum and minimum heights above rail are set out in 5.1.6. For lifting points at other positions, the heights of the lifting points shall be part of the vehicle specification.

Single central jacking points may be provided positioned outboard of the running gear at the vehicle ends for jacking for a single end lift. Provision and the height of such additional jacking points shall be part of the vehicle specification.

All other lifting points shall be placed along the vehicle car body sides or at the ends of the vehicle, and

— shall be arranged with a matching lifting point on the opposite side of the vehicle, i.e. arranged in pairs,

— pairs of lifting points shall be separated laterally by at least 860 mm.

5.1.3 Longitudinal location of jacking points

Jacking points for re-railing and recovery shall be located longitudinally according to Figure 4 subject to satisfying the requirements of 5.1.4 and 5.1.6:

— outboard or inboard of the running gear (zones 1 and 4 as shown in Figure 4);

or

— in a restricted zone, at a position which is greater than or equal to 360 mm longitudinally from the centreline of a designated re-railing beam space envelope (zones 2 as shown in Figure 4);

or

— if space for a re-railing beam underneath a bogie is not required, in zone 3 as shown in Figure 4.

NOTE 1 In a restricted zone (zones 2 as shown in Figure 4), to satisfy the requirements of 5.1.4 and 5.1.6, a possible solution is to use jacking brackets. It is also possible to achieve the requirements of 5.1.4 and 5.1.6 in a restricted zone where compact running gear is used (e.g. inside frame bogies).

If jacking points are located in zones 2 and for a twisted bogie the required clearances cannot be achieved, additional jacking points may be used so that a pair of jacking points, one point on each side, are always available in these zones (see 5.1.4).

AVA Documents
Document Sharing Hub

Full document details: BS EN 16404:2016

It is recommended that jacking points are not located within areas designed for controlled structural collapse and therefore vehicle designs incorporating structural crashworthiness can prevent the placing of jacking points in end zones that are intended to collapse under crash conditions.

For On-track Machines within the scope of this European Standard, jacking points should be provided where possible at a distance of 1 400 mm from the middle of the individual running gear.

Dimensions in millimetres

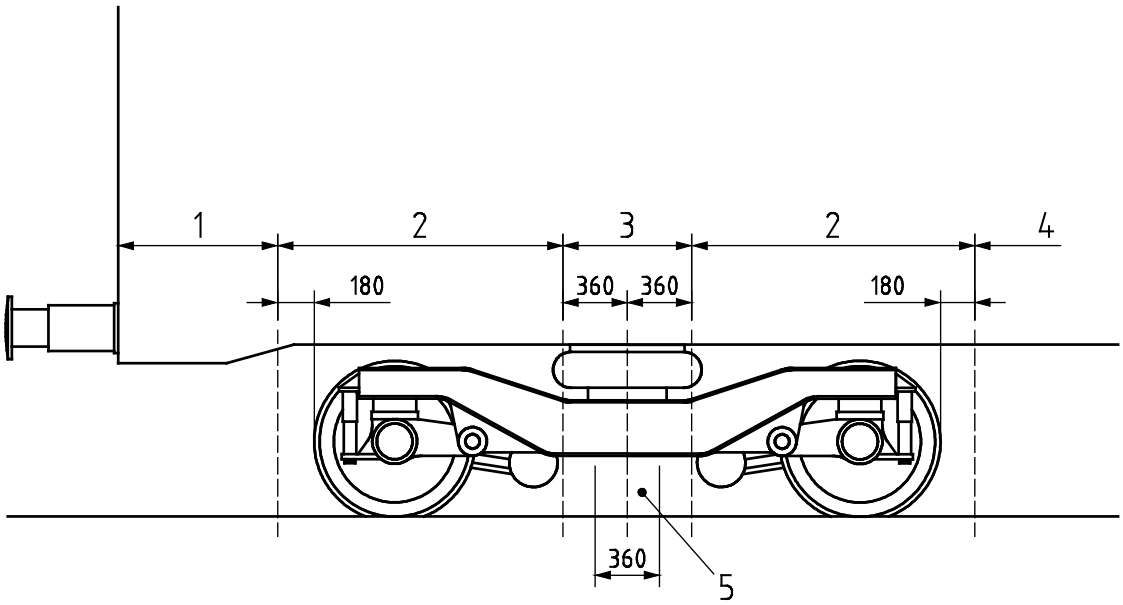

Key

1 outboard zone for jacking points

2 restricted zone for location of jacking points (see 5.1.4)

3 zone where jacking points for re-railing and recovery should not be located to allow a re-railing beam to be used under the bogie (see 5.1.9)

4 inboard zone for jacking points

5 longitudinal free space zone for a re-railing beam if required; there is no height requirement as the vehicle will be lifted before a re-railing beam is inserted

Figure 4 — Permissible jacking point positions at a vehicle end

NOTE 2 The dimensions set out in Figure 4 refer to the vertical axis of a jack that is contained in a cylindrical design space envelope of 180 mm radius and a design space envelope for a re-railing beam of 360 mm width.

5.1.4 Jacking equipment clearance zones

Clearance shall be provided underneath and around each jacking point to allow for the installation of jacking equipment and accessories.

Removable jacking brackets may be used to achieve the clearances required.

In the vicinity of jacking points the following design space envelopes shall be provided. The minimum design clearance shall be provided between any part of the vehicle, its running gear and the jacking equipment space envelope, assuming the vehicle is upright and level.

— The design clearance shall be maintained from the underside of the jacking pad down to rail level.

Documents
Document Sharing Hub
Full document details: BS EN 16404:2016

— A minimum jack height of 250 mm measured downwards from the top of the jack in the retracted condition shall be assumed.

— A cylindrical space envelope of 360 mm diameter shall be assumed requiring a minimum radial design clearance of 180 mm.

— For nominal jacking loads up to 20 t, a cylindrical space envelope of 280 mm diameter for the upper portion of the jack may be assumed, requiring a minimum radial design clearance of 140 mm. The jack base shall be represented by a cylindrical space envelope of 360 mm diameter with a height of 150 mm. If the vehicle design requires this option, this shall form part of the vehicle specification.

If a design space envelope of 280 mm diameter is used, the relevant dimensions given in Figure 4 (see 5.1.3) that define the boundary between zones 1 and 2, zones 2 and 3 and zones 2 and 4 may be adjusted accordingly.

Requirements for positioning of the line of action relative to jacking point geometry are set out in 5.2.

Where lifting brackets according to Annex B are used, the overhang of the lifting bracket may be increased in accordance with Table B.1, with a resulting reduction in load capacity, to provide sufficient space alongside the vehicle body profile for the jacking equipment design space envelope.

Between the top of the jack and the jacking contact surface it is permissible to use adaptors subject to the specified line of action being maintained between the jack and the vehicle jacking pad or the jack contact face of a jacking bracket as shown in Figure 5.

Any adaptors shall be designed to interface to the lifting brackets used (for an example see Figure B.3) and conform to the same performance requirements as those specified for the lifting brackets (see 6.4.2). Adaptors shall be designed to locate positively onto the lifting bracket for which they are designed so that under load the lifting bracket and adaptor function as a single item.

NOTE 1 For a lifting bracket according to Annex B, the adaptor shown in Figure B.3 gives a vertical offset of 85 mm between the top face of the jack and the lifting bracket axis (see Figure 5).

Adaptors for use with brackets shall be considered in combination with the brackets to determine the jack contact face. Below the jack contact face the appropriate jack space envelope shall be used.

Documents
Document Sharing Hub
Full document details: BS EN 16404:2016