BS EN 16779-2:2022

BSI Standards Publication

Textile child care articles — Safety requirements and test methods for children's cot duvets
Part 2: Duvet covers (excluding duvet)

Documents
Document Sharing Hub

Full document details: BS EN 16779-2:2022

National foreword

The UK participation in its preparation was entrusted to Technical Committee TCI/66/-/1, Risks in the sleeping environment.

A list of organizations represented on this committee can be obtained on request to its committee manager.

Contractual and legal considerations

This publication has been prepared in good faith, however no representation, warranty, assurance or undertaking (express or implied) is or will be made, and no responsibility or liability is or will be accepted by BSI in relation to the adequacy, accuracy, completeness or reasonableness of this publication. All and any such responsibility and liability is expressly disclaimed to the full extent permitted by the law.

This publication is provided as is, and is to be used at the recipient's own risk.

The recipient is advised to consider seeking professional guidance with respect to its use of this publication.

This publication is not intended to constitute a contract. Users are responsible for its correct application.

© The British Standards Institution 2022
Published by BSI Standards Limited 2022

ISBN 978 0 539 12714 0

ICS 97.160; 97.190

Compliance with a British Standard cannot confer immunity from legal obligations.

This British Standard was published under the authority of the Standards Policy and Strategy Committee on 30 September 2022.

Amendments/corrigenda issued since publication

Date	Text affected

Documents
Document Sharing Hub

Full document details: BS EN 16779-2:2022

EUROPEAN STANDARD

NORME EUROPÉENNE

EUROPÄISCHE NORM

EN 16779-2

July 2022

ICS 97.160; 97.190

English Version

Textile child care articles - Safety requirements and test methods for children's cot duvets - Part 2: Duvet covers (excluding duvet)

Articles textiles de puériculture - Exigences de sécurité et méthodes d'essai pour les couettes pour lit à nacelle - Partie 2 : Housses de couette (excluant les couettes)

Textile Artikel für Säuglinge und Kleinkinder - Sicherheitstechnische Anforderungen und Prüfverfahren für Kinderbettdecken - Teil 2: Bettdeckenbezüge (ausgenommen Bettdecken)

This European Standard was approved by CEN on 13 June 2022.

CEN members are bound to comply with the CEN/CENELEC Internal Regulations which stipulate the conditions for giving this European Standard the status of a national standard without any alteration. Up-to-date lists and bibliographical references concerning such national standards may be obtained on application to the CEN-CENELEC Management Centre or to any CEN member.

This European Standard exists in three official versions (English, French, German). A version in any other language made by translation under the responsibility of a CEN member into its own language and notified to the CEN-CENELEC Management Centre has the same status as the official versions.

CEN members are the national standards bodies of Austria, Belgium, Bulgaria, Croatia, Cyprus, Czech Republic, Denmark, Estonia, Finland, France, Germany, Greece, Hungary, Iceland, Ireland, Italy, Latvia, Lithuania, Luxembourg, Malta, Netherlands, Norway, Poland, Portugal, Republic of North Macedonia, Romania, Serbia, Slovakia, Slovenia, Spain, Sweden, Switzerland, Türkiye and United Kingdom.

EUROPEAN COMMITTEE FOR STANDARDIZATION
COMITÉ EUROPÉEN DE NORMALISATION
EUROPÄISCHES KOMITEE FÜR NORMUNG

CEN-CENELEC Management Centre: Rue de la Science 23, B-1040 Brussels

© 2022 CEN All rights of exploitation in any form and by any means reserved worldwide for CEN national Members.

Ref. No. EN 16779-2:2022 E

Documents
Document Sharing Hub

Full document details: BS EN 16779-2:2022

Contents

Page

European foreword 3
Introduction 4
1 Scope 5
2 Normative references 5
3 Terms and definitions 6
4 General 9
5 Requirements and test methods 10
5.1 Mechanical hazards (see B.3) 10
5.1.1 Suffocation hazards (see B.3.1) 10
5.1.2 Entrapment hazards (ischaemia see B.3.2) 10
5.1.3 Choking hazards (see B.3.3) 11
5.1.4 Entanglement hazards (strangulation - see B.3.4) 12
5.1.5 Hazardous edges and projections (see B.3.5) 12
5.1.6 Ingestion hazards (see B.3.6) 13
5.2 Chemical hazards (see B.4) 13
5.2.1 Migration of certain elements 13
5.2.2 Formaldehyde 14
5.2.3 Flame retardants 14
5.3 Thermal hazards hyperthermia and hypothermia (see B.5) 15
5.3.1 Requirements 15
5.4 Flammability and burning hazards (see B.6) 15
5.5 Hygiene hazards (see B.7) 15
5.5.1 Requirements and methods 15
6 User information 15
6.1 General 15
6.2 Marking 16
6.3 Purchase information 16
6.4 Instruction for use 16
6.5 Plastic packaging 17
Annex A (informative) Inherently safe design 18
Annex B (informative) Rationale 21
Annex C (informative) Specific marking, purchase information and user instruction 28
Bibliography 29

Documents
Document Sharing Hub
Full document details: BS EN 16779-2:2022

European foreword

This document (EN 16779-2:2022) has been prepared by Technical Committee CEN/TC 248 "Textiles and textile products", the secretariat of which is held by BSI.

This European Standard shall be given the status of a national standard, either by publication of an identical text or by endorsement, at the latest by January 2023, and conflicting national standards shall be withdrawn at the latest by January 2023.

Attention is drawn to the possibility that some of the elements of this document may be the subject of patent rights. CEN shall not be held responsible for identifying any or all such patent rights.

Any feedback and questions on this document should be directed to the users' national standards body. A complete listing of these bodies can be found on the CEN website.

According to the CEN-CENELEC Internal Regulations, the national standards organisations of the following countries are bound to implement this European Standard: Austria, Belgium, Bulgaria, Croatia, Cyprus, Czech Republic, Denmark, Estonia, Finland, France, Germany, Greece, Hungary, Iceland, Ireland, Italy, Latvia, Lithuania, Luxembourg, Malta, Netherlands, Norway, Poland, Portugal, Republic of North Macedonia, Romania, Serbia, Slovakia, Slovenia, Spain, Sweden, Switzerland, Türkiye and the United Kingdom.

Documents
Document Sharing Hub
Full document details: BS EN 16779-2:2022

Introduction

This document has been written to support EN 16779-1 *Textile child care articles – Safety requirements and test methods for children's cot duvets - Part 1: Duvet (excluding duvet covers)* and to be used in conjunction with it.

EN 16779-1 was written as a response to the European Commission Mandate N° M/497, under the title "Standardisation mandate to CEN, CENELEC and ETSI on the safety of child-care articles; Cluster 2- risks in the sleeping environment; Mattresses for cots, cot bumpers, suspended beds for children, duvets for children sleep bags for children".

The aim of this document is to minimize the main risks posed by products in the sleep environment of babies and young children, such as:

— internal asphyxiation (choking);

— entrapment;

— hyperthermia (overheating);

— entanglement (strangulation);

— external asphyxiation (suffocation);

— flammability;

— injuries due to falls;

— injuries due to ingestion of small parts;

— injuries due to chemicals.

For the development of this document, attention was paid to:

— the child's stages of development (age, height, weight, ability, etc.). Cot duvet covers were studied in relation to children up to 3 years of age;

— the intended or foreseeable use of the product, bearing in mind a child's behaviour. Such behaviour exposes children to injury in ways that differ from those of adults, making children a particularly vulnerable group in society;

— the hazard presented by the product in the circumstances under which the product and the child come into contact with each other.

IMPORTANT — In order to comply with the safety requirements, this document is hazard based. As this document only deals with a particular textile child-care article, i.e. removable cot duvet covers, design characteristics have been specified only when necessary in order to introduce inherently safe design. These characteristics have been specified in a manner which allows compliance to be checked by interested parties, from designers to market surveillance authority officers.

Documents
Document Sharing Hub
Full document details: BS EN 16779-2:2022

1 Scope

This document specifies requirements for the safety of removable cot duvet covers, used in the child's sleeping environment (i.e. not under supervision), and designed to envelop a cot duvet when sleeping in a cot or similar product (e.g. crib/cradle) in which a child is contained. This document specifies requirements for removable cot duvet covers suitable for children up to 36 months.

The requirements for cot duvets are covered in EN 16779-1.

Some of the requirements in this document are not suitable for articles used by hospitals when nursing sick children. These include:

— openings for access for tubing to the patient or monitoring devices to monitor the patient;

— use of fastenings which may not be durable to industrial laundry processing used by hospitals.

If a part of the cot duvet cover is designed to offer additional functions (e.g. play function), in addition to the following requirements, this part will be subjected to safety requirements related to relevant standards (see B.1).

2 Normative references

The following documents are referred to in the text in such a way that some or all of their content constitutes requirements of this document. For dated references, only the edition cited applies. For undated references, the latest edition of the referenced document (including any amendments) applies.

EN 71-3:2019+A1:2021, *Safety of toys - Part 3: Migration of certain elements*

EN 1103:2005, *Textiles - Fabrics for apparel - Detailed procedure to determine the burning behaviour*

EN 16711-2:2015, *Textiles - Determination of metal content - Part 2: Determination of metals extracted by acidic artificial perspiration solution*

EN 16732:2015, *Slide fasteners (zips) - Specification*

CEN/TS 17394-1:2021, *Textiles and textile products - Part 1: Safety of children's clothing - Security of attachment of attached components to infants' clothing - Specification*

EN 17394-2:2020, *Textiles and textile products - Part 2: Safety of children's clothing - Security of attachment of buttons - Test method*

CEN/TS 17394-3:2021, *Textiles and textile products - Part 3: Safety of children's clothing - Security of attachment of metal mechanically applied press fasteners - Test method*

CEN/TS 17394-4:2021, *Textiles and textile products - Part 4: Safety of children's clothing - Security of attachment of components except buttons and metal mechanically applied press fasteners - Test method*

EN ISO 105-E01:2013, *Textiles - Tests for colour fastness - Part E01: Colour fastness to water (ISO 105-E01:2013)*

EN ISO 6330:2021, *Textiles - Domestic washing and drying procedures for textile testing (ISO 6330:2021)*

EN ISO 14184-1:2011, *Textiles - Determination of formaldehyde - Part 1: Free and hydrolysed formaldehyde (water extraction method) (ISO 14184-1:2011)*

AVA Documents
Document Sharing Hub

Full document details: BS EN 16779-2:2022

EN ISO 17226-1:2021, *Leather - Chemical determination of formaldehyde content - Part 1: Method using high-performance liquid chromatography (ISO 17226-1:2021)*

ISO 105-F10:1989,[1] *Textiles — Tests for colour fastness — Part F10: Specification for adjacent fabric: Multifibre*

ISO 4915:1991, *Textiles — Stitch types — Classification and terminology*

ISO 7000, *Graphical symbols for use on equipment — Registered symbols*

3 Terms and definitions

For the purposes of this document, the following terms and definitions apply.

ISO and IEC maintain terminological databases for use in standardization at the following addresses:

— IEC Electropedia: available at https://www.electropedia.org/

— ISO Online browsing platform: available at https://www.iso.org/obp

3.1
cot duvet
bedding item intended to cover the child's body, consisting of a filling material permanently sewn into a textile cover intended to be used with or without duvet cover in the cot or in a similar product

Note 1 to entry: The terms "cot quilt" or "coverlet" are interchangeable with "cot duvet".

[SOURCE: EN 16779-1:2018, 3.1]

3.2
cot duvet cover
removable bed linen intended to envelop a cot duvet

[SOURCE: EN 16779-1:2018, 3.2 with "*bed linen*" replacing "*bedding item*" and "*a cot duvet*" replacing "*cot duvet(s)*".]

3.3
cot
bed for a child consisting of a base and enclosed by high sides to prevent the child from falling out

[SOURCE: EN 16779-1:2018, 3.3]

3.4
harm
injury or damage to the health of people

[SOURCE: ISO/IEC Guide 51:2014, 3.1, modified — "or damage to property or the environment" has been deleted.]

[1] As impacted by ISO 105-F10:1989/AMD 1:2009.

Documents
Document Sharing Hub
Full document details: BS EN 16779-2:2022

3.5
hazard
potential source of *harm* (3.4)

[SOURCE: ISO/IEC Guide 51:2014, 3.2]

3.6
risk
combination of the probability of occurrence of *harm* (3.4) and the severity of that *harm*

[SOURCE: ISO/IEC Guide 51:2014, 3.9, modified — Note 1 to entry has been deleted.]

3.7
inherently safe design
measures taken to eliminate *hazards* (3.5) and/or to reduce *risks* (3.6) by changing the design or operating characteristics of the product or system

[SOURCE: ISO/IEC Guide 51:2014, 3.5]

3.8
asphyxiation
insufficient supply of air to the airways

Note 1 to entry: Insufficient supply of air could be caused e.g. by closing off the flow of air as a result of choking or suffocation or by entrapment in an unventilated, confined space.

[SOURCE: EN 71-1:2014, 3.4]

3.9
choking
closing off the flow of air as a result of internal *asphyxiation* (3.8)

Note 1 to entry: Choking can, for example, be caused by inhalation of an object, by an object becoming wedged in the mouth or pharynx, or by an object becoming lodged over the entrance to the lower airways.

[SOURCE: EN 71-1:2014, 3.10]

3.10
suffocation
closing off the flow of air as a result of airway obstruction external to the mouth and nose

[SOURCE: EN 71-1:2014, 3.67]

3.11
drawstring
cord, chain, ribbon, string or tape, made of any textile or non-textile material including elastic material, which passes through a channel, loop(s) or eyelet(s) or similar, to adjust the size of the opening, or part of the product

[SOURCE: EN 14682:2014, 2.5, with "*garment or to fasten the garment itself*" removed and addition of "*product*"]

Documents
Document Sharing Hub
Full document details: BS EN 16779-2:2022

3.12
cord
tape, ribbon, string or chain of any textile or non-textile material, including elastic material

3.13
monofilament thread
single thread of man-made fibre

[SOURCE: EN 16779-1:2018, 3.12]

3.14
burr
roughness, caused by not cleanly severing or finishing the material

[SOURCE: EN 71-1:2014, 3.7]

3.15
surface flash
rapid spread of flame over the surface of a material without ignition of its basic structure

Note 1 to entry: However, if ignition of its basic structure occurs simultaneously or sequentially with surface flash, it is not considered as a part of surface flash.

[SOURCE: ISO 4880:1997, 63, modified — without Note 2 to entry.]

3.16
raised fabric
napped fabric
fabric for which a surface effect is formed by mechanically raising fibres from yarns of the ground fabric

[SOURCE: ISO 12947-2:2016, 3.6, modified — with "*yarns*" replacing "*threads* (3.1)".]

3.17
appliqué
cut out design or shape attached to the face of material for ornamentation, frequently of a different type and/or shade of material

[SOURCE: CEN/TR 16792:2014, 3.20]

3.18
small part
component or piece of a component which when dropped, without compression, into the small parts cylinder in any orientation, fits entirely within the cylinder

Documents
Document Sharing Hub
Full document details: BS EN 16779-2:2022

Dimensions in millimetres

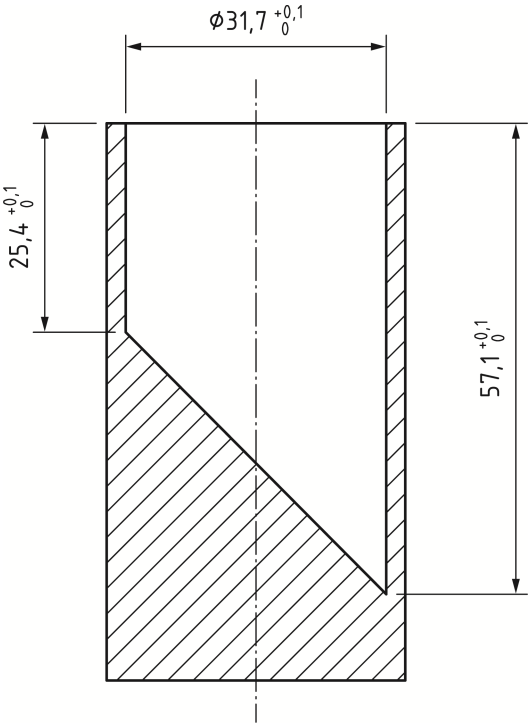

Figure 1 — Small parts cylinder

4 General

The information provided here are the general characteristics for a cot duvet cover which are considered to result in inherently safe design. Alternative designs may be acceptable, but will require safety risk assessment using the rationales in Annex B.

NOTE 1 Inherently safe design is gathered in Annex A. Table A.1 summarizes the relationship between inherently safe design and hazards and for which the entries are related to the design.

It should be noted that at night, an infant is effectively unsupervised as the carers can also be expected to be sleeping, so certain features which are acceptable during the day when carers are available, may not be acceptable at night.

NOTE 2 Rationales for the inclusion of some of the requirements given in this document are given in Annex B. Table B.1 summarizes the relationship between inherently safe design and hazards and for which the entries are related to the hazards.

The dimensions of the cot duvet covers might be compatible with the cot duvet dimensions.

NOTE 3 Maximum dimensions of cot duvet of 120 cm × 140 cm are stated in EN 16779-1:2018, 4.1.1.3. An additional dimension of approximately 10 cm of cot duvet covers in length and width has been found suitable to allow for the cot duvet thickness and laundry shrinkage.

Documents
Document Sharing Hub
Full document details: BS EN 16779-2:2022