BS EN 17149-1:2024

BSI Standards Publication

Railway applications — Strength assessment of rail vehicle structures

Part 1: General

Documents
Document Sharing Hub

Full document details: BS EN 17149-1:2024

National foreword

This British Standard is the UK implementation of EN 17149-1:2024.

The UK participation in its preparation was entrusted to Technical Committee RAE/3/-/11, Railway Applications - Structural requirements and Welding.

A list of organizations represented on this committee can be obtained on request to its committee manager.

Contractual and legal considerations

This publication has been prepared in good faith, however no representation, warranty, assurance or undertaking (express or implied) is or will be made, and no responsibility or liability is or will be accepted by BSI in relation to the adequacy, accuracy, completeness or reasonableness of this publication. All and any such responsibility and liability is expressly disclaimed to the full extent permitted by the law.

This publication is provided as is, and is to be used at the recipient's own risk.

The recipient is advised to consider seeking professional guidance with respect to its use of this publication.

This publication is not intended to constitute a contract. Users are responsible for its correct application.

© The British Standards Institution 2024
Published by BSI Standards Limited 2024

ISBN 978 0 539 17410 6

ICS 45.060.01

Compliance with a British Standard cannot confer immunity from legal obligations.

This British Standard was published under the authority of the Standards Policy and Strategy Committee on 30 April 2024.

Amendments/corrigenda issued since publication

Date	Text affected

Documents
Document Sharing Hub

Full document details: BS EN 17149-1:2024

EUROPEAN STANDARD

NORME EUROPÉENNE

EUROPÄISCHE NORM

EN 17149-1

April 2024

ICS 45.060.01

English Version

Railway applications - Strength assessment of rail vehicle structures - Part 1: General

Applications ferroviaires - Évaluation de la résistance des structures de véhicule ferroviaire - Partie 1 : Généralités

Bahnanwendungen - Festigkeitsnachweis von Schienenfahrzeugstrukturen - Teil 1: Allgemeines

This European Standard was approved by CEN on 15 January 2024.

CEN members are bound to comply with the CEN/CENELEC Internal Regulations which stipulate the conditions for giving this European Standard the status of a national standard without any alteration. Up-to-date lists and bibliographical references concerning such national standards may be obtained on application to the CEN-CENELEC Management Centre or to any CEN member.

This European Standard exists in three official versions (English, French, German). A version in any other language made by translation under the responsibility of a CEN member into its own language and notified to the CEN-CENELEC Management Centre has the same status as the official versions.

CEN members are the national standards bodies of Austria, Belgium, Bulgaria, Croatia, Cyprus, Czech Republic, Denmark, Estonia, Finland, France, Germany, Greece, Hungary, Iceland, Ireland, Italy, Latvia, Lithuania, Luxembourg, Malta, Netherlands, Norway, Poland, Portugal, Republic of North Macedonia, Romania, Serbia, Slovakia, Slovenia, Spain, Sweden, Switzerland, Türkiye and United Kingdom.

EUROPEAN COMMITTEE FOR STANDARDIZATION
COMITÉ EUROPÉEN DE NORMALISATION
EUROPÄISCHES KOMITEE FÜR NORMUNG

CEN-CENELEC Management Centre: Rue de la Science 23, B-1040 Brussels

© 2024 CEN All rights of exploitation in any form and by any means reserved worldwide for CEN national Members.

Ref. No. EN 17149-1:2024 E

Documents
Document Sharing Hub

Full document details: BS EN 17149-1:2024

Contents

Page

European foreword ... 3
Introduction ... 4
1 Scope ... 5
2 Normative references ... 5
3 Terms and definitions ... 5
3.1 General terms and strength related terms ... 5
3.2 Material related terms ... 7
3.3 Terms related to welding ... 9
3.4 Static related terms ... 14
3.5 Fatigue related terms ... 14
4 Symbols and abbreviations ... 18
5 Linear stress determination ... 25
5.1 General ... 25
5.2 Parent material ... 25
5.3 Welded joints ... 25
5.3.1 General ... 25
5.3.2 Evaluation point ... 26
5.4 Determination of stresses by test ... 29
6 Modes of structural failure ... 30
6.1 Collapse ... 30
6.2 Rupture ... 30
6.3 Significant permanent deformation ... 30
6.4 Low cycle fatigue ... 30
6.5 High cycle fatigue ... 30
7 Partial factors for covering uncertainties ... 30
7.1 General ... 30
7.2 Partial factor for loads γ_L ... 31
7.3 Partial factor for the component strength γ_M ... 31
7.3.1 General ... 31
7.3.2 Consequence of failure ... 32
7.3.3 Degree of the validation process ... 32
8 Strength assessment procedure ... 32
9 Tolerances and uncertainties in respect to structural strength ... 32
9.1 General ... 32
9.2 Influence of manufacturing on material properties ... 33
9.3 Influence of manufacturing on dimensional tolerances ... 33
9.4 Loads ... 33
9.5 Validation process ... 33
Bibliography ... 34

Documents
Document Sharing Hub

Full document details: BS EN 17149-1:2024

European foreword

This document (EN 17149-1:2024) has been prepared by Technical Committee CEN/TC 256 "'Railway applications", the secretariat of which is held by DIN.

This European Standard shall be given the status of a national standard, either by publication of an identical text or by endorsement, at the latest by October 2024, and conflicting national standards shall be withdrawn at the latest by October 2024.

Attention is drawn to the possibility that some of the elements of this document may be the subject of patent rights. CEN shall not be held responsible for identifying any or all such patent rights.

This document is part of the series EN 17149 *Railway applications — Strength assessment of rail vehicle structures*, which consists of the following parts:

— *Part 1: General*

— *Part 2: Static strength assessment*

The following part is under preparation:

— *Part 3: Fatigue strength assessment based on cumulative damage*

This document has been prepared under a mandate given to CEN by the European Commission and the European Free Trade Association.

Any feedback and questions on this document should be directed to the users' national standards body. A complete listing of these bodies can be found on the CEN website.

According to the CEN-CENELEC Internal Regulations, the national standards organisations of the following countries are bound to implement this European Standard: Austria, Belgium, Bulgaria, Croatia, Cyprus, Czech Republic, Denmark, Estonia, Finland, France, Germany, Greece, Hungary, Iceland, Ireland, Italy, Latvia, Lithuania, Luxembourg, Malta, Netherlands, Norway, Poland, Portugal, Republic of North Macedonia, Romania, Serbia, Slovakia, Slovenia, Spain, Sweden, Switzerland, Türkiye and the United Kingdom.

Documents
Document Sharing Hub

Full document details: BS EN 17149-1:2024

Introduction

The structural design of rail vehicle structures depends on the loads they are subject to and the characteristics of the materials they are manufactured from. This document provides the basic procedure and criteria to enable a strength assessment to be undertaken.

This document does not specify load cases and does not specify in which cases or for which kinds of rail vehicles a strength assessment is to be applied.

Documents
Document Sharing Hub

Full document details: BS EN 17149-1:2024

1 Scope

This document supports the other standards in the EN 17149 series, in order to ensure consistency of terminology across the series. It describes the basic terms and definitions as well as general procedures for strength assessments of rail vehicle structures that are manufactured, operated and maintained in accordance with standards valid for rail system applications.

This document is applicable to all kinds of rail vehicles.

The assessment procedure is restricted to ferrous materials and aluminium.

This document does not define design load cases.

This document is not applicable for corrosive conditions or elevated temperature operation in the creep range.

2 Normative references

The following documents are referred to in the text in such a way that some or all of their content constitutes requirements of this document. For dated references, only the edition cited applies. For undated references, the latest edition of the referenced document (including any amendments) applies.

EN 17149-2:2024, *Railway applications — Strength assessment of rail vehicle structures — Part 2: Static strength assessment*

EN 17149-3:—[1], *Railway applications — Strength assessment of rail vehicle structures — Part 3: Fatigue strength assessment based on cumulative damage*

EN 17343:2023, *Railway applications — General terms and definitions*

ISO/TR 25901-1:2016, *Welding and allied processes — Vocabulary — Part 1: General terms*

3 Terms and definitions

For the purposes of this document, the terms and definitions, symbols and abbreviations given in ISO/TR 25901-1:2016, EN 17343:2023 and the following terms and definitions, symbols and abbreviations apply.

ISO and IEC maintain terminological databases for use in standardization at the following addresses:

— ISO Online browsing platform: available at https://www.iso.org/obp

— IEC Electropedia: available at https://www.electropedia.org/

3.1 General terms and strength related terms

3.1.1
rail vehicle structure
combination of all load carrying parts of a rail vehicle including its substructures and components

3.1.2
corrosive condition
condition in which an operation in corrosive environment causes effects on the material strength values or loss of material

[1] Under preparation. Stage at the time of publication prEN 17149-3:2023.

Documents
Document Sharing Hub
Full document details: BS EN 17149-1:2024

Note 1 to entry: It is presupposed that in railway applications an adequate corrosion protection avoids corrosive conditions for the structure. Corrosive conditions are therefore out of the scope of this document.

3.1.3
finite element analysis
FEA
numerical method for obtaining approximate solutions of partial differential equations subject to boundary conditions

Note 1 to entry: Finite element analysis is a kind of numerical calculation.

[SOURCE: ISO 18459:2015, 3.6, modified – Note 1 to entry has been changed.]

3.1.4
partial factor
factor considering uncertainties of loads (forces), material, model, geometry, manufacturing, degree of validation or a combination of these

Note 1 to entry: In some of the referenced documents, the partial factor is described with terms as “safety factor” as in EN 12663 series and EN 13749 or partial factor for variable actions (e.g. loads or forces) and for material, model and geometric uncertainties as in ISO 2394.

3.1.5
design load
load or combination of loads which a structure is designed to withstand, incorporating any necessary allowances to account for uncertainties in their values

3.1.6
representative load
load or combination of loads derived from standards, simulations or tests, covering a known set of influences, acting as a basis for the derivation of design load

Note 1 to entry: The derivation of the design load from the representative load is usually done by multiplying by the partial factor for loads γ_L.

3.1.7
design stress
stress or stress spectrum derived from design loads or determined by representative measurements and multiplied by an appropriate partial factor γ_L

3.1.8
utilisation
ratio between the acting value – calculated or measured - and the allowable limit value

Note 1 to entry: The values are usually expressed as terms of loads, stresses or strains.

3.1.9
safety category
classification based on the severity of the consequences of failure of a structural detail with respect to the effects on persons, facilities and the environment

[SOURCE: EN 15085-1:2023, 3.8, modified – 'single welded joint' has been substituted by 'structural detail']

Documents
Document Sharing Hub
Full document details: BS EN 17149-1:2024

3.1.10
exceptional load
infrequent load which represents the extreme loads or combination of loads for the relevant operation conditions

3.1.11
ultimate load
extreme load that the structure withstands without rupture or collapse

3.1.12
exceptional design load
design load derived from an exceptional load

Note 1 to entry: In other documents (e.g. in EN 12663-1:2010+A2:2023) exceptional design load is also defined as 'static load', 'static design load' or 'proof load'.

3.1.13
ultimate design load
design load derived from an ultimate load

Note 1 to entry: Ultimate design loads represent loading conditions which can occur under extreme conditions (e. g. recovery situations or misuse).

3.1.14
fatigue load
repetitive load or combination of loads

3.1.15
potential crack initiation point
physical area in the component where stress concentrations can cause fatigue crack initiation and location on the design of a component which is intended to be assessed

Note 1 to entry: For parent material assessments, the potential crack initiation points are typically locations of stress concentrations, where also the stresses are determined by strain gauges, extracted from FEA models, or determined by analytical calculations.

3.1.16
evaluation point
location of the stress determination for the weld assessment with nominal, modified nominal or structural stress approach

Note 1 to entry: For weld assessments with nominal, modified nominal or structural stress approach, the evaluation point differs from the potential crack initiation point.

3.2 Material related terms

3.2.1
brittle material
material that has a permanent elongation at rupture of $A < 6$ %

Note 1 to entry: Cast iron with lamellar graphite (GJL) and cast aluminium (AC) are examples for brittle material.

Note 2 to entry: The specific definition of the elongation at rupture is given in the appropriate material standard of the applied material.

Documents
Document Sharing Hub
Full document details: BS EN 17149-1:2024

3.2.2
ductile material
material which is not brittle

3.2.3
plastification
load-indicated inelastic strain response from a stress level above the material yield strength

Note 1 to entry: Plastification describes the local material strain property.

3.2.4
significant permanent deformation
plastification which infringes the functionality of a component or the structure

Note 1 to entry: Significant permanent deformation describes the effect on the geometry of a component or the structure.

3.2.5
structural failure
loss of load-carrying capacity in the structure

3.2.6
local yielding
plastification in a local area small enough so that no significant permanent deformation occurs

Note 1 to entry: The zone of local yielding with a high load bearing reserve against collapse or rupture is also called plastic spot.

3.2.7
fully operational
completely functional, working and as designed to serve a defined purpose under specific conditions

Note 1 to entry: The term fully operational implies no significant permanent deformation and no need for repair.

3.2.8
survival probability
probability that the structural detail will not fail within a specified operating time

Note 1 to entry: Survival probability is related to the single sided probability of the distribution function.

[SOURCE: ISO 11994:1997, 7.1, modified – 'product' has been changed into 'structural detail'; Note 1 to entry has been added]

3.2.9
shear stress
component of stress coplanar with a material cross section

3.2.10
direct stress
component of a stress tensor which is not shear stress, not indicating a specific orientation

Note 1 to entry: This term is also known as ‘normal stress’. The term ‘direct stress’ is chosen to avoid confusion with an oriented stress component normal (perpendicular) to the weld.

Documents
Document Sharing Hub
Full document details: BS EN 17149-1:2024

3.2.11
membrane stress
average direct stress which is uniform across the thickness of a plate or shell

3.2.12
bending stress
stress in a shell or plate-like part of a component with linear distribution across the thickness

3.2.13
secondary bending stress
bending stress in a weld throat caused by membrane stress and eccentricity e_W between the midpoint of the weld throat and the midpoint of the connected plate

Note 1 to entry: The weld throat eccentricity is shown in Figure 6.

3.2.14
residual stress
permanent internally balanced stresses in a structure, caused by manufacturing processes (e.g., rolling, cutting or welding)

3.3 Terms related to welding

3.3.1
parent material
material of a structure outside of welded joints

[SOURCE: ISO/TR 25901-1:2016, 2.1.1.5, modified – extension to any material which is not welded]

3.3.2
transverse to the weld
perpendicular to the feature under consideration

Note 1 to entry: Stresses and strains transverse to the weld are indicated with an index '⊥'.

Note 2 to entry: The stress direction definition 'transverse to the weld' is shown in Figure 1.

Note 3 to entry: Examples of features under consideration include the weld toe and the weld end.

Documents
Document Sharing Hub
Full document details: BS EN 17149-1:2024

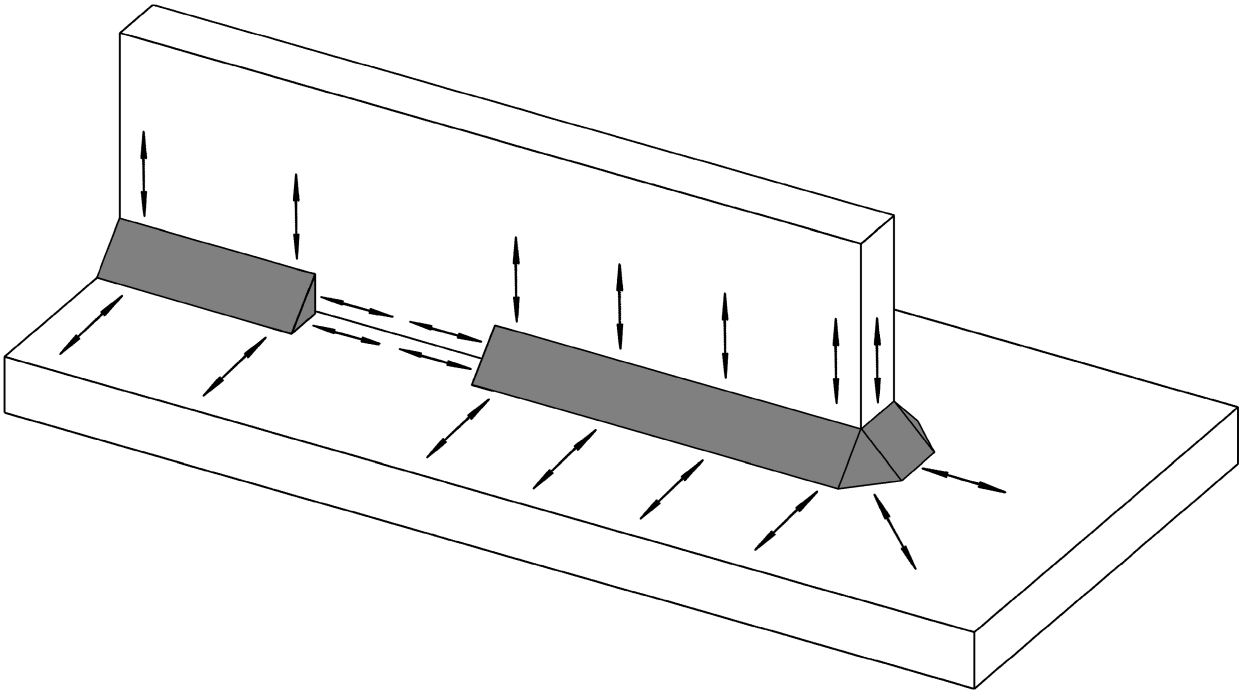

Figure 1 — Stress direction definition transverse to the weld

3.3.3
longitudinal to the weld
aligned with (parallel to) the feature under consideration (e.g., the weld toe)

Note 1 to entry: The stress direction definition ‘longitudinal to the weld’ is shown in Figure 2.

Note 2 to entry: In general, the direction ‘longitudinal to the weld’ is perpendicular to the direction ‘transverse to the weld’.

Note 3 to entry: Stresses and strains longitudinal to the weld are indicated with an index 'II'.

Documents
Document Sharing Hub
Full document details: BS EN 17149-1:2024