BS EN 17860-3:2024

BSI Standards Publication

Carrier Cycles

Part 3: Lightweight multi track carrier cycles — Mechanical aspects

Documents
Document Sharing Hub

Full document details: BS EN 17860-3:2024

National foreword

This British Standard is the UK implementation of EN 17860-3:2024.

The UK participation in its preparation was entrusted to Technical Committee GME/25, Cycles.

A list of organizations represented on this committee can be obtained on request to its committee manager.

Contractual and legal considerations

This publication has been prepared in good faith, however no representation, warranty, assurance or undertaking (express or implied) is or will be made, and no responsibility or liability is or will be accepted by BSI in relation to the adequacy, accuracy, completeness or reasonableness of this publication. All and any such responsibility and liability is expressly disclaimed to the full extent permitted by the law.

This publication is provided as is, and is to be used at the recipient's own risk.

The recipient is advised to consider seeking professional guidance with respect to its use of this publication.

This publication is not intended to constitute a contract. Users are responsible for its correct application.

© The British Standards Institution 2024
Published by BSI Standards Limited 2024

ISBN 978 0 539 19823 2

ICS 43.150; 43.150

Compliance with a British Standard cannot confer immunity from legal obligations.

This British Standard was published under the authority of the Standards Policy and Strategy Committee on 30 September 2024.

Amendments/corrigenda issued since publication

Date	Text affected

Documents
Document Sharing Hub

Full document details: BS EN 17860-3:2024

EUROPEAN STANDARD

NORME EUROPÉENNE

EUROPÄISCHE NORM

EN 17860-3

September 2024

ICS 43.150

English Version

Carrier Cycles - Part 3: Lightweight multi track carrier cycles - Mechanical aspects

Cycles utilitaires - Partie 3 : Cycles utilitaires légers à 3 roues et plus - Aspects mécaniques

Lastenfahrräder - Teil 3: Leichte mehrspurige Lastenfahrräder - Mechanische Aspekte

This European Standard was approved by CEN on 14 July 2024.

CEN members are bound to comply with the CEN/CENELEC Internal Regulations which stipulate the conditions for giving this European Standard the status of a national standard without any alteration. Up-to-date lists and bibliographical references concerning such national standards may be obtained on application to the CEN-CENELEC Management Centre or to any CEN member.

This European Standard exists in three official versions (English, French, German). A version in any other language made by translation under the responsibility of a CEN member into its own language and notified to the CEN-CENELEC Management Centre has the same status as the official versions.

CEN members are the national standards bodies of Austria, Belgium, Bulgaria, Croatia, Cyprus, Czech Republic, Denmark, Estonia, Finland, France, Germany, Greece, Hungary, Iceland, Ireland, Italy, Latvia, Lithuania, Luxembourg, Malta, Netherlands, Norway, Poland, Portugal, Republic of North Macedonia, Romania, Serbia, Slovakia, Slovenia, Spain, Sweden, Switzerland, Türkiye and United Kingdom.

EUROPEAN COMMITTEE FOR STANDARDIZATION
COMITÉ EUROPÉEN DE NORMALISATION
EUROPÄISCHES KOMITEE FÜR NORMUNG

CEN-CENELEC Management Centre: Rue de la Science 23, B-1040 Brussels

© 2024 CEN All rights of exploitation in any form and by any means reserved worldwide for CEN national Members.

Ref. No. EN 17860-3:2024 E

Documents
Document Sharing Hub

Full document details: BS EN 17860-3:2024

Contents

Page

European foreword ... 5
Introduction ... 6
1 Scope ... 7
2 Normative references ... 7
3 Terms and definitions ... 7
4 Use cases: private and commercial/professional use ... 7
5 General vehicle requirements ... 8
5.1 Numbers and condition of specimens for the strength tests ... 8
5.2 Accuracy tolerances of test conditions for brake tests and strength tests ... 8
5.3 Protrusions ... 8
5.4 Sharp edges ... 8
5.5 Securing and strength of safety-relevant fasteners ... 8
5.6 Shimmy ... 8
5.7 Requirements for loading areas/load securing ... 8
5.8 Parking and stability ... 8
5.8.1 Requirement ... 8
5.8.2 Tipping stability of multi track carrier cycles ... 9
5.8.3 Parking stability while loading ... 9
5.8.4 Dynamic tipping stability of multi track carrier cycles ... 10
5.8.5 Dynamic tipping stability on slopes ... 11
5.8.6 Prevention of wheel jamming of multi track carrier cycles ... 12
5.9 Pedal clearance ... 13
5.9.1 Ground clearance ... 13
5.9.2 Toe clearance ... 14
5.10 Wheel and tyre assembly – clearance ... 14
5.11 Wheel retention ... 14
5.11.1 General ... 14
5.11.2 Wheel retention – retention devices secured ... 14
5.11.3 Front wheel retention – retention devices unsecured ... 14
5.11.4 Wheels – quick release devices – operation features ... 15
5.12 Vibrations, ergonomics and design ... 15
6 Brakes ... 15
6.1 General ... 15
6.2 Hand-operated brakes ... 15
6.2.1 Brake lever position ... 15
6.2.2 Brake-lever grip dimension ... 15
6.2.3 Attachment of brake assembly and cable requirements ... 15
6.2.4 Brake-lever – Position of applied force ... 16
6.2.5 Brake-block and brake-pad assemblies – Safety test ... 16
6.2.6 Hand-operated braking-system – Strength test ... 16
6.2.7 Back-pedal braking system – Strength test ... 17
6.3 Requirements of the test method on a test track ... 18
6.4 Requirements of the test method on a test bench ... 18
6.5 Tests ... 18

Documents
Document Sharing Hub
Full document details: BS EN 17860-3:2024

7 Steering ... 19
7.1 General ... 19
7.2 Handlebar ... 21
7.2.1 General ... 21
7.2.2 Handlebar stem – Insertion-depth mark or positive stop ... 21
7.2.3 Handlebar stem to fork steerer – Clamping requirements ... 21
7.2.4 Handlebar grips or handlebar plugs ... 21
7.2.5 Steering unit – Static strength and fastening tests ... 21
7.2.6 Handlebar stem: Forward bending test ... 21
7.2.7 Handlebar to handlebar stem — Torsional security test ... 21
7.3 Dynamic steering test ... 21
7.4 Handlebar/stem unit – Dynamic test ... 21

8 Frame ... 21
8.1 Suspension frames — Special requirements ... 21
8.2 Requirements for all frame types ... 21
8.3 Frame – Dynamic test with pedalling forces ... 22
8.3.1 General ... 22
8.3.2 Test method ... 22
8.4 Frame – Dynamic test with horizontal forces ... 25
8.4.1 General ... 25
8.4.2 Determination of the test loads ... 25
8.4.3 Test method ... 26
8.5 Frame — Dynamic test with a vertical force onto the seatpost ... 28
8.6 Frame – Dynamic test with vertical forces onto the loading area ... 28
8.7 Frame – Dynamic test with lateral forces ... 28
8.7.1 General ... 28
8.7.2 Requirement ... 29
8.7.3 Test method ... 29
8.8 Frame – Brake mount test ... 31
8.8.1 Requirements ... 31
8.8.2 Brake mount fatigue test ... 32
8.8.3 Brake mount static torque test ... 32
8.9 Frame – Trailer suitability stress test ... 33
8.9.1 Requirement ... 33
8.9.2 Test method ... 33

9 Front wheel fork ... 33

10 Wheels and wheel/tyre assembly ... 33
10.1 Wheels/tyre assembly – Concentricity tolerance and lateral tolerance ... 33
10.1.1 Requirements ... 33
10.2 Wheel/tyre assembly – static strength test ... 33
10.2.1 Requirements ... 33
10.2.2 Test method ... 34
10.3 Wheel and wheel/tyre unit — Dynamic test for carrier cycles ... 34
10.3.1 Requirement ... 34
10.3.2 Test method ... 35

11 Rims, tyres and tubes ... 36
11.1 General ... 36
11.2 Tyre inflation pressure ... 36
11.3 Tyre and rim compatibility ... 36
11.4 Rim-wear ... 37
11.5 Greenhouse effect test for composite wheels ... 37

AVA Documents
Document Sharing Hub

Full document details: BS EN 17860-3:2024

11.5.1 General 37
11.5.2 Requirement 37
11.5.3 Test method 37
12 Mudguards/wheel covers 38
13 Pedals and pedal/crank drive system 38
14 Drive chain and drive belt 38
15 Chain-wheel and belt-drive protective device 38
16 Saddles, seatposts and seats 38
16.1 Saddles and seatposts 38
16.2 Seats 39
16.2.1 Requirement 39
16.2.2 Test method for dynamic loads 39
16.2.3 Test method for static loads 39
17 Lighting systems and reflectors 41
18 Warning device 41
19 Rear-view mirror 41
20 Safety belts for cyclists 41
21 Marking 42
22 Manufacturer's instructions 42
23 Structural integrity test 42
Annex A (normative) Test of cycles professional/commercial use 43
Annex B (informative) Calculation of the centre of gravity of cycles or carrier cycles 44
Bibliography 52

Documents
Document Sharing Hub
Full document details: BS EN 17860-3:2024

European foreword

This document (EN 17860-3:2024) has been prepared by Technical Committee CEN/TC 333 “Cycles”, the secretariat of which is held by UNI.

This European Standard shall be given the status of a national standard, either by publication of an identical text or by endorsement, at the latest by March 2025, and conflicting national standards shall be withdrawn at the latest by March 2025.

Attention is drawn to the possibility that some of the elements of this document may be the subject of patent rights. CEN shall not be held responsible for identifying any or all such patent rights.

This document is part of standard series consisting of the following parts, users are invited to check which parts are applicable to their situation

— FprEN 17860-1:2023, Cycles — Carrier Cycles — Part 1: Vocabulary

— FprEN 17860-2:2023, Cycles — Carrier Cycles — Part 2: Lightweight single track carrier cycles – mechanical and functional aspects

— FprEN 17860-3:2023, Cycles — Carrier Cycles — Part 3: Lightweight multi track carrier cycles – mechanical and functional aspects

— prEN 17860-4, Cycles — Carrier Cycles — Heavyweight multi track carrier cycles – mechanical and functional aspects

— prEN 17860-5:2023, Cycles — Carrier Cycles — Electrical aspects

— prEN 17860-6, Cycles — Carrier Cycles — Passenger transport

— prEN 17860-7:2023, Cycles — Carrier Cycles — Trailers

Examples of carrier cycle configurations can be found in EN 17860-2:2024, Annex A. EN 17860-2:2024, Annex B provides a reading guide for parts 2,3 and 4 of this standard series.

Any feedback and questions on this document should be directed to the users’ national standards body. A complete listing of these bodies can be found on the CEN website.

According to the CEN-CENELEC Internal Regulations, the national standards organisations of the following countries are bound to implement this European Standard: Austria, Belgium, Bulgaria, Croatia, Cyprus, Czech Republic, Denmark, Estonia, Finland, France, Germany, Greece, Hungary, Iceland, Ireland, Italy, Latvia, Lithuania, Luxembourg, Malta, Netherlands, Norway, Poland, Portugal, Republic of North Macedonia, Romania, Serbia, Slovakia, Slovenia, Spain, Sweden, Switzerland, Türkiye and the United Kingdom.

AVA Documents
Document Sharing Hub

Full document details: BS EN 17860-3:2024

Introduction

This document gives requirements and test methods for mechanical and functional aspects for multi track carrier cycles.

This document has been developed in response to demand throughout Europe. Its aim is to provide a standard for the assessment of mechanical aspects for multi track carrier cycles of a type which are excluded from type approval by Regulation (EU) No. 168/2013.

Because of the diversity of geometries and solutions of carrier cycles not all requirements and test methods in this document may apply to every carrier cycle.

— Annex A in FprEN 17860-2:2023 gives an overview of vehicle configurations.

— Annex B in FprEN 17860-2:2023 provides a reading guide for the parts of this standard series.

— Annex J in FprEN 17860-2:2023 contains a rationale explaining the choices made when developing the standard series

This document is based on a risk analysis, the focus is on mechanical aspects for multitrack carrier cycles. This document is a type C standard as specified in EN ISO 12100. The machinery concerned and the extent to which hazards, hazardous situations and hazardous events are covered are indicated in the scope of this document.

Documents
Document Sharing Hub

Full document details: BS EN 17860-3:2024

1 Scope

This document is applicable to multi track carrier cycles with or without electric assistance and a maximum gross vehicle weight of 300 kg.

NOTE1 Requirements that are similar to single track carrier cycles are covered in Part 2 of this standard series.

NOTE2 Requirements for electrical power assisted carrier cycles will be covered in Part 5 of this standard series.

2 Normative references

The following documents are referred to in the text in such a way that some or all of their content constitutes requirements of this document. For dated references, only the edition cited applies. For undated references, the latest edition of the referenced document (including any amendments) applies.

EN 17860-1:2024, *Cycles — Carrier Cycles — Part 1: Vocabulary*

EN 17860-2:2024, *Cycles — Carrier Cycles — Part 2: Lightweight single track carrier cycles – mechanical and functional aspects*

EN 17860-7:—,[1] *Cycles — Carrier Cycles — Trailers*

EN ISO 4210-3:2023, *Cycles - Safety requirements for bicycles - Part 3: Common test methods (ISO 4210-3:2023)*

EN ISO 4210-6:2023, *Cycles - Safety requirements for bicycles - Part 6: Frame and fork test methods (ISO 4210-6:2023, Corrected version 2023-08)*

EN ISO 12100:2010, *Safety of machinery - General principles for design - Risk assessment and risk reduction (ISO 12100:2010)*

ISO 5775-1:2023, *Bicycle tyres and rims — Part 1: Tyre designations and dimensions*

3 Terms and definitions

For the purposes of this document, the terms and definitions given in EN 17860-1:2024 and EN ISO 12100:2010 apply.

ISO and IEC maintain terminology databases for use in standardization at the following addresses:

— ISO Online browsing platform: available at https://www.iso.org/obp/

— IEC Electropedia: available at https://www.electropedia.org/

4 Use cases: private and commercial/professional use

The requirements in the main part of this standard refer to carrier cycles for private use. In case the manufacturer defines the carrier cycles to be intended for commercial/professional use higher test values for dynamic tests apply. Annex A gives the higher test values for the relevant tests.

[1] Under preparation. Stage at time of publication: FprEN 17860-7:2024.

Documents
Document Sharing Hub
Full document details: BS EN 17860-3:2024

5 General vehicle requirements

5.1 Numbers and condition of specimens for the strength tests

EN 17860-2:2024, 5.1 applies.

5.2 Accuracy tolerances of test conditions for brake tests and strength tests

EN 17860-2:2024, 5.2 applies.

5.3 Protrusions

EN 17860-2:2024, 5.3 applies.

5.4 Sharp edges

EN 17860-2:2024, 5.4 applies.

5.5 Securing and strength of safety-relevant fasteners

EN 17860-2:2024, 5.5 applies.

5.6 Shimmy

EN 17860-2:2024, 5.7 applies.

5.7 Requirements for loading areas/load securing

The position of the transported load or the seats shall be selected such that the carrier cycle can be ridden and braked safely in each loading and operating situation, the rider is not hindered and vision is not limited. A rear-view mirror shall be installed if vision to the rear is limited due to normal positioning of the payload or the vehicles construction.

Uniform wheel load distribution and the lowest possible overall centre of gravity shall be strived for.

Loading areas shall only be attached to the intended parts of the carrier cycle and shall be securely and firmly connected to the frame (no vibration).

Loading areas shall not impede riding (handlebar angle, pedal movement) or mounting and dismounting.

Loading areas should be attached to the frame such that the centre of gravity of the carrier cycle is as low as possible.

In the case of several loading areas, attention shall be paid to even load distribution.

Each individual loading area shall be clearly marked by the manufacturer with the maximum permissible payload weight.

Loading areas should include devices with which the carrier can be secured to prevent slipping, falling over, rolling back and forth, falling down in the event of full braking or sudden evasive motions, e.g. non-slip floor covering, load securing nets, covers, eyelets or options for attaching lashing straps.

5.8 Parking and stability

5.8.1 Requirement

Carrier cycle shall be equipped with a mechanical parking function. This parking function can be fulfilled, for instance, by a stand and/or a mechanical parking brake.

With the parking function, it shall be possible to secure the loaded and unladen carrier cycle to prevent it from rolling away on a slope of 10 % (5,7°) in one direction.

Documents
Document Sharing Hub
Full document details: BS EN 17860-3:2024

Suitable, additional measures (wheel chocks, for instance) are permissible for larger slopes.

5.8.2 Tipping stability of multi track carrier cycles

5.8.2.1 Static tipping stability of multi track carrier cycles

No wheel shall visibly lose contact with the ground in the test in accordance with 5.8.2.2.

5.8.2.2 Test method

The test shall be conducted on a surface inclined by the inclination angle, α, (see Figure 1) by at least 18 % (10,2°).

The test shall be conducted with the seat pillar extended to its maximum limit.

The tyres shall be inflated to (100 ± 5) % of the maximum permissible tyre pressure printed on the tyre.

The test loads on the seat surfaces and carrier areas shall be applied in accordance with the manufacturer's load specifications or, if these are not specified, shall be selected and applied centrally such that the centre of gravity height of the load is 150 mm above the seat surface and the surface of the carrier areas, unless otherwise or determined by the design.

50 kg shall be applied on the seat, and 10 kg on the left and right on the handlebar; max. payload in the carrier areas as specified by the manufacturer.

The static, lateral tipping stability shall be verified for all loading conditions up to the respective maximum payload per carrier area.

If a loading condition is clearly identifiable as the most critical in terms of tipping stability, verification for this loading condition is sufficient.

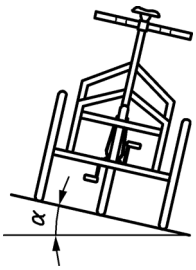

Key

α inclination angle

Figure 1 — Static tipping stability

5.8.3 Parking stability while loading

5.8.3.1 Requirements

No wheel shall visibly lift .

5.8.3.2 Test method

The cycle shall be positioned on a flat surface. The parking system shall be engaged.

A person of 90 ± 10 kg shall step on the most critical (outer) edge of the loading area standing straight up, without holding on to something (Figure 2). The test person shall gradually shift their full weight to the edge, without jumping on.

Documents
Document Sharing Hub
Full document details: BS EN 17860-3:2024

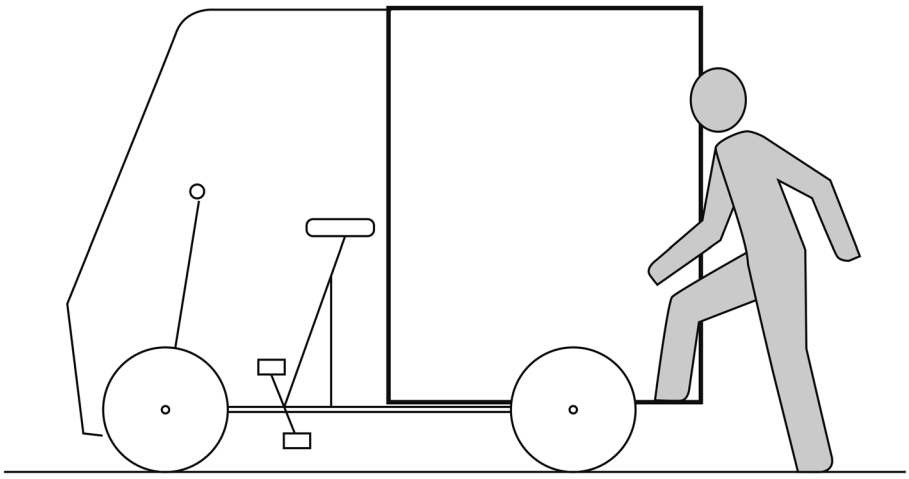

Figure 2 — Parking stability while loading

5.8.4 Dynamic tipping stability of multi track carrier cycles

5.8.4.1 Requirement

At a constant centripetal acceleration of 0,99 m/s², no wheel shall visibly lose contact with the ground in the test in accordance with 5.8.4.2.

5.8.4.2 Test method

Riding circles shall be performed on a flat surface.

An applicable test diameter and speed shall be selected from reference values in Table 1. Intermediate diameter -velocity combinations may be provided the resulting centripetal acceleration remains 0,99 m/s².

The diameter shall not exceed 15,5 m.

The chosen test track diameter shall be ridden along with the carrier cycle. The diameter line should be kept centrally between the wheels.

The test shall be conducted at a speed applicable for the diameter as given in Table 1, measured centrally on the circular track or at an outer wheel.

Testing shall be conducted with maximum inflation pressure.

During the test drive, the test person shall maintain in the sitting position the cycle is designed for.

The test shall be commenced with a flying start.

The dynamic, lateral tipping stability shall be verified for all loading conditions up to the respective maximum payload per cargo area.

If a loading condition is clearly identifiable as the most critical in terms of tipping stability, verification for this loading condition is sufficient.

The test is regarded as passed if a complete lap has been covered and no wheel visibly loses contact with the ground.

Documents
Document Sharing Hub
Full document details: BS EN 17860-3:2024

Table 1 — Reference values for centripetal acceleration

Diameter [m]	Speed [km/h]	Velocity [m/s]	v^2/r [m/s²]
5,6	6	1,66	0,99
6,6	6,5	1,81	0,99
7,6	7	1,94	0,99
8,7	7,5	2,07	0,99
10	8	2,22	0,99
11,2	8,5	2,35	0,99
12,6	9	2,49	0,99
14	9,5	2,63	0,99
15,5	10	2,77	0,99

5.8.5 Dynamic tipping stability on slopes

5.8.5.1 General

While remaining within any constraints mandated by the manufacturer in the user manual, all loads shall be adjusted to create a least stable configuration of the cycle. This determination may require several iterations to determine the configuration or configurations, that is or are the least stable.

5.8.5.2 Requirement

Cycle shall return in stable position with all wheels on the ground when tested in accordance with 5.8.5.3. During testing it is allowed that wheels loose contact with the ground.

In case of tipping, it is allowed to add anti-tipping wheels to help the cycle return in stable position.

5.8.5.3 Test method

5.8.5.3.1 General

The test shall be performed as follows:

a) For tests on slopes the test plane is inclined to 6° relative to the horizontal angle.

b) If the rated slope specified by the manufacturer is greater than the applicable rated slope test the cycle with the test plane set at the rated slope specified by the manufacturer.

5.8.5.3.2 Starting forwards horizontal and uphill

NOTE This test determines stability when a cycle starts on a horizontal surface and on an uphill slope.

The test shall be performed as follows:

a) Position the cycle on the horizontal test plane and uphill slope of 6°, laden and unladen.

b) From a stationary position, use maximum electrical support (when applicable) and use start up assistance mode (when applicable). Accelerate the cycle from the lowest gear and give maximum acceleration in the forward direction.

AVA Documents
Document Sharing Hub

Full document details: BS EN 17860-3:2024

c) Observe the dynamic response of the cycle.

If the manufacturer recommends a technique for driving on a slope, test the cycle using the recommended technique.

5.8.5.3.3 Stopping forwards downhill

The test shall be performed as follows:

a) Run the cycle at a speed of 15 km/h forward on a downhill slope of 6° or more, laden and unladen.

b) Apply braking with increasing braking force to the front axle of the cycle to stop it. The last test run must be conducted with maximum possible braking deceleration.

c) Observe the dynamic response of the cycle.

Braking force should be increased slowly to ensure the safety of the test rider.

If the manufacturer recommends a technique for driving on a slope, test the cycle using the recommended technique.

5.8.5.3.4 Stopping backwards downhill

NOTE This test assesses the cycle's stability when it abruptly stops at its fastest reverse speed while moving both horizontally and backwards downhill.

The test shall be performed as follows:

The maximum reverse speed is 6 km/h.

a) Run the cycle at maximum reverse speed on a downhill slope of 6° or more, laden and unladen.

b) Apply braking with increasing braking force to the rear axle of the cycle to stop it. The last test run has to be conducted with maximum possible braking deceleration.

c) Observe the dynamic response of the cycle.

Braking force should be increased slowly to ensure the safety of the test rider.

If the manufacturer recommends a technique for driving on a slope, test the cycle using the recommended technique.

5.8.6 Prevention of wheel jamming of multi track carrier cycles

Manufacturers are encouraged to consider deflective devices to mitigate a scenario of obstacles, such as posts, colliding with the carrier cycle between a wheel and other parts of the cycle (Figure 3). If this functionality is not obvious by design, it may be tested with an obstacle with minimum height of 300 mm and diameter of 90 mm.

Documents
Document Sharing Hub
Full document details: BS EN 17860-3:2024

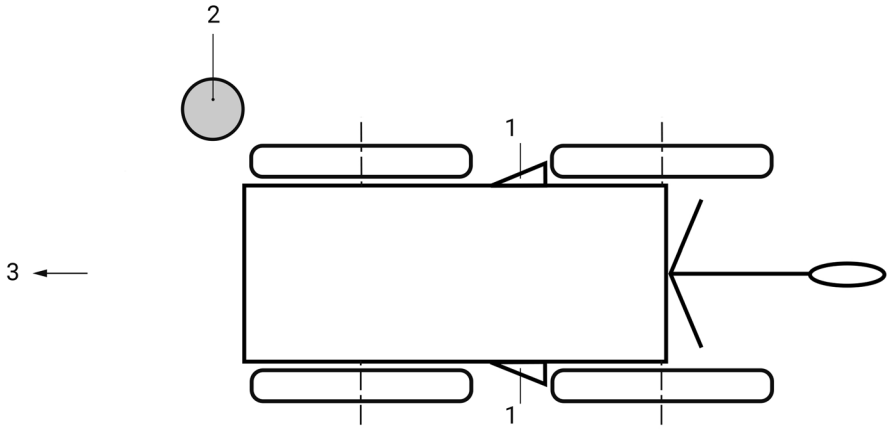

a) Four-wheeler

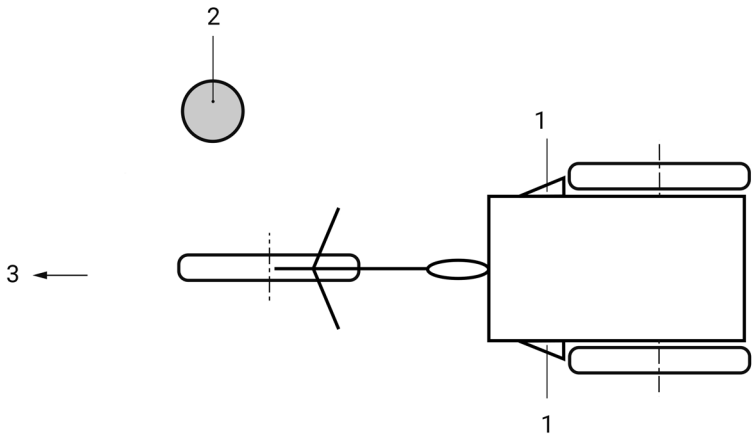

b) Three-wheeler

Key

1 deflection devices
2 vertical obstacles
3 direction of travel

Figure 3 — Example of deflection devices

5.9 Pedal clearance

5.9.1 Ground clearance

If the cycle is capable of tilting during use, EN 17860-2:2024, 5.10.1 applies.

Multi track carrier cycles must be able to ride over a rectangular obstacle with a height of 110 mm and a width of 50 % of the track width in the centre, with a pedal crank tilted forward by 45° to the horizontal. In doing so, neither the pedal, the pedal crank, the chain ring or any other part of the cargo cycle may touch the obstacle.

The air pressure shall be 90 % of the maximum tyre pressure specified by the tyre manufacturer and the vehicle shall be ridden by a rider weighing (100 ± 5) kg.

AVA Documents
Document Sharing Hub

Full document details: BS EN 17860-3:2024

The front and rear of the obstacle may be provided with a ramp to facilitate passing over the single wheel in the case of three-wheeled carrier cycles.

For four-wheeled carrier cycles, the width of the obstacle shall be 50 % of the track width of the narrower axle.

When the carrier cycle is equipped with a suspension system, this measurement shall be taken with the suspension dampers (of fork and shock) set to full open positions and with the carrier cycle depressed into a position such as would be caused by a rider weighing (100 ± 5) kg.

5.9.2 Toe clearance

EN 17860-2:2024, 5.10.2 applies.

5.10 Wheel and tyre assembly – clearance

EN 17860-2:2024, 5.11 applies.

5.11 Wheel retention

5.11.1 General

Wheel retention safety is related to the combination of wheel, retention device, and dropout design.

Wheels shall be secured to carrier cycle frame and fork such that when adjusted to the manufacturer's instructions they comply with 5.11.2, 5.11.3 and 5.11.4.

Wheel nuts shall have a minimum removal torque of 70 % of the manufacturer's recommended tightening torque.

Where quick-release axle devices are used they shall comply with 5.11.4.

5.11.2 Wheel retention – retention devices secured

5.11.2.1 Requirement

When tested by the method described in 5.11.2.2, there shall be no relative motion between the axle and the front fork/frame.

5.11.2.2 Test method

Apply a force of 2 300 N distributed symmetrically to both ends of the axle for a period of 1 min in the direction of the removal of the front and rear wheel independently.

5.11.3 Front wheel retention – retention devices unsecured

The carrier cycle shall be equipped with secondary retention system that retains the front wheel in the dropouts when the primary retention system is in the open (unlocked) position and wheel off the ground.

Where threaded axles and nuts are fitted, and the nuts are unscrewed by at least 360 ° from the finger tight condition and the brake system disconnected or released, the wheel shall not detach from the front fork when a force of 100 N is applied radially outwards, in line with the dropout slots, and maintained for 1 min.

Where quick-release is fitted, and the quick-release lever is fully open and the brake system is disconnected or released, the wheel shall not detach from the front fork when a force of 100 N is applied to the wheel radially outwards, in line with the dropout slots, and maintained for 1 min.

Documents
Document Sharing Hub
Full document details: BS EN 17860-3:2024

5.11.4 Wheels – quick release devices – operation features

Any quick-release device shall have the following operating features:

a) it shall be adjustable to allow setting for tightness;

b) its form and marking shall clearly indicate whether the device is in the open or locked position;

c) if adjustable by a lever, the force required to close a properly set lever shall not exceed 200 N and, at this closing force there shall be no permanent deformation of the quick-release device;

d) the releasing force of the clamping device when closed shall not be less than 50 N;

e) if operated by a lever, the quick-release device shall withstand without fracture or permanent deformation a closing force of not less than 250 N applied with the adjustment set to prevent closure at this force;

f) the wheel retention with the quick-release device in the clamped position shall be in accordance with 5.11.2

g) the front wheel retention with the quick-release device in the open position shall be in accordance with 5.11.3

If applied to a lever, the forces specified in c), d), and e) shall be applied 5 mm from the tip end of the lever.

5.12 Vibrations, ergonomics and design

EN 17860-2:2024, 5.14 applies.

6 Brakes

6.1 General

EN 17860-2:2024, 6.1 applies.

6.2 Hand-operated brakes

6.2.1 Brake lever position

EN 17860-2: 2024, 6.2.1 applies.

6.2.2 Brake-lever grip dimension

EN 17860-2: 2024, 6.2.2 applies.

6.2.3 Attachment of brake assembly and cable requirements

Cable pinch-bolts shall not sever any of the cable strands when assembled to the manufacturer's instructions. In the event of a cable failing, no part of the brake mechanism shall inadvertently inhibit the rotation of the wheel.

The cable end shall either be protected with a cap that shall withstand a removal force of not less than 20 N or be otherwise treated to prevent unravelling.

AVA Documents
Document Sharing Hub

Full document details: BS EN 17860-3:2024