BS EN 1793-6:2018+A1:2021

BSI Standards Publication

Road traffic noise reducing devices — Test method for determining the acoustic performance

Part 6: Intrinsic characteristics — In situ values of airborne sound insulation under direct sound field conditions

Documents
Document Sharing Hub

Full document details: BS EN 1793-6:2018+A1:2021

National foreword

This British Standard is the UK implementation of EN 1793-6:2018+A1:2021. It supersedes BS EN 1793-6:2018, which is withdrawn.

The start and finish of text introduced or altered by amendment is indicated in the text by tags. Tags indicating changes to CEN text carry the number of the CEN amendment. For example, text altered by CEN amendment A1 is indicated by ▌A1⟩ ⟨A1▌.

The UK participation in its preparation was entrusted to Technical Committee B/509/6, Fences for the attenuation of noise.

A list of organizations represented on this committee can be obtained on request to its committee manager.

This publication does not purport to include all the necessary provisions of a contract. Users are responsible for its correct application.

© The British Standards Institution 2021
Published by BSI Standards Limited 2021

ISBN 978 0 539 05195 7

ICS 17.140.30; 93.080.30

Compliance with a British Standard cannot confer immunity from legal obligations.

This British Standard was published under the authority of the Standards Policy and Strategy Committee on 31 July 2018.

Amendments/corrigenda issued since publication

Date	Text affected
31 March 2021	Implementation of CEN amendment A1:2021

Documents
Document Sharing Hub

Full document details: BS EN 1793-6:2018+A1:2021

EUROPEAN STANDARD

NORME EUROPÉENNE

EUROPÄISCHE NORM

EN 1793-6:2018+A1

March 2021

ICS 17.140.30; 93.080.30

English Version

Road traffic noise reducing devices - Test method for determining the acoustic performance - Part 6: Intrinsic characteristics - In situ values of airborne sound insulation under direct sound field conditions

Dispositifs de réduction du bruit du trafic routier - Méthode d'essai pour la détermination de la performance acoustique - Partie 6 : Caractéristiques intrinsèques - Valeurs in situ d'isolation aux bruits aériens dans des conditions de champ acoustique direct

Lärmschutzvorrichtungen an Straßen - Prüfverfahren zur Bestimmung der akustischen Eigenschaften - Teil 6: Produktspezifische Merkmale - In-situ-Werte der Luftschalldämmung in gerichteten Schallfeldern

This European Standard was approved by CEN on 19 February 2018 and includes Amendment 1 approved by CEN on 17 August 2020.

CEN members are bound to comply with the CEN/CENELEC Internal Regulations which stipulate the conditions for giving this European Standard the status of a national standard without any alteration. Up-to-date lists and bibliographical references concerning such national standards may be obtained on application to the CEN-CENELEC Management Centre or to any CEN member.

This European Standard exists in three official versions (English, French, German). A version in any other language made by translation under the responsibility of a CEN member into its own language and notified to the CEN-CENELEC Management Centre has the same status as the official versions.

CEN members are the national standards bodies of Austria, Belgium, Bulgaria, Croatia, Cyprus, Czech Republic, Denmark, Estonia, Finland, France, Germany, Greece, Hungary, Iceland, Ireland, Italy, Latvia, Lithuania, Luxembourg, Malta, Netherlands, Norway, Poland, Portugal, Republic of North Macedonia, Romania, Serbia, Slovakia, Slovenia, Spain, Sweden, Switzerland, Turkey and United Kingdom.

EUROPEAN COMMITTEE FOR STANDARDIZATION
COMITÉ EUROPÉEN DE NORMALISATION
EUROPÄISCHES KOMITEE FÜR NORMUNG

CEN-CENELEC Management Centre: Rue de la Science 23, B-1040 Brussels

© 2021 CEN All rights of exploitation in any form and by any means reserved worldwide for CEN national Members.

Ref. No. EN 1793-6:2018+A1:2021 E

Documents
Document Sharing Hub

Full document details: BS EN 1793-6:2018+A1:2021

Contents

Page

European foreword 4
Introduction 5
1 Scope 7
2 Normative references 7
3 Terms and definitions 8
4 Sound insulation index measurements 12
4.1 General principle 12
4.2 Measured quantity 12
4.3 Test arrangement 13
4.4 Measuring equipment 18
4.4.1 Components of the measuring system 18
4.4.2 Sound source 18
4.4.3 Test signal 18
4.5 Data processing 19
4.5.1 Calibration 19
4.5.2 Sample rate 19
4.5.3 Background noise 20
4.5.4 Scanning technique using a single microphone 20
4.5.5 Scanning technique using nine microphones 20
4.5.6 Adrienne temporal window 21
4.5.7 Placement of the Adrienne temporal window 22
4.5.8 Low frequency limit and sample size 23
4.6 Positioning of the measuring equipment 24
4.6.1 Selection of the measurement positions 24
4.6.2 Post measurements 25
4.6.3 Additional measurements 25
4.6.4 Reflecting objects 25
4.6.5 Safety considerations 25
4.7 Sample surface and meteorological conditions 26
4.7.1 Condition of the sample surface 26
4.7.2 Wind 26
4.7.3 Air temperature 26
4.8 Single-number rating 26
4.8.1 General 26
4.8.2 Acoustic elements 26
4.8.3 Posts 27
4.8.4 Global 27
5 Measurement uncertainty 28
6 Measuring procedure 28
7 Test report 29
Annex A (informative) Categorization of single-number rating 31

Documents
Document Sharing Hub
Full document details: BS EN 1793-6:2018+A1:2021

Annex B (informative) Guidance note on use of the single-number rating 32
Annex C (informative) Measurement uncertainty 33
C.1 General 33
C.2 Measurement uncertainty based upon reproducibility data 33
C.3 Standard deviation of repeatability and reproducibility of the sound insulation index 33
Annex D (informative) Template of test report on airborne sound insulation of road traffic noise reducing devices 36
D.1 General 36
D.2 Test setup (example) 38
D.3 Test object and test situation (example) 39
D.4 Results (example) 42
D.4.1 Part 1 – Results for 'element' in tabular form 42
D.4.2 Part 2 – Results for 'element' in graphic form 43
D.4.3 Part 3 – Results for 'post' in tabular form 43
D.4.4 Part 4 – Results for 'post' in graphic form 44
D.4.5 Part 5 – Results for global condition (average of 'element' and 'post') in tabular form 45
D.4.6 Part 6 – Results for global condition (average of 'element' and 'post') in graphic form 46
D.5 Uncertainty (example) 46
Bibliography 49

Documents
Document Sharing Hub
Full document details: BS EN 1793-6:2018+A1:2021

European foreword

This document (EN 1793-6:2018+A1:2021) has been prepared by Technical Committee CEN/TC 226 “Road equipment”, the secretariat of which is held by AFNOR.

This European Standard shall be given the status of a national standard, either by publication of an identical text or by endorsement, at the latest by September 2021, and conflicting national standards shall be withdrawn at the latest by September 2021.

Attention is drawn to the possibility that some of the elements of this document may be the subject of patent rights. CEN shall not be held responsible for identifying any or all such patent rights.

This document includes Amendment 1 approved by CEN on 06 January 2020.

This document supersedes [A1⟩ EN 1793-6:2018 ⟨A1].

[A1⟩ *Deleted text* ⟨A1]

The start and finish of text introduced or altered by amendment is indicated in the text by tags [A1⟩ ⟨A1].

EN 1793-6 is part of a series of documents and will be read in conjunction with the following:

— EN 1793-1, *Road traffic noise reducing devices - Test method for determining the acoustic performance - Part 1: Intrinsic characteristics of sound absorption under diffuse sound field conditions*;

— EN 1793-2, *Road traffic noise reducing devices - Test method for determining the acoustic performance - Part 2: Intrinsic characteristics of airborne sound insulation under diffuse sound field conditions*;

— EN 1793-3, *Road traffic noise reducing devices - Test method for determining the acoustic performance - Part 3: Normalized traffic noise spectrum*;

— EN 1793-4, *Road traffic noise reducing devices - Test method for determining the acoustic performance - Part 4: Intrinsic characteristics - In situ values of sound diffraction*;

— EN 1793-5, *Road traffic noise reducing devices - Test method for determining the acoustic performance - Part 5: Intrinsic characteristics - In situ values of sound reflection under direct sound field conditions*.

This European Standard has been prepared, under the direction of Technical Committee CEN/TC 226 “Road equipment”, by Working Group 6 “Noise reducing devices”.

According to the CEN-CENELEC Internal Regulations, the national standards organizations of the following countries are bound to implement this European Standard: Austria, Belgium, Bulgaria, Croatia, Cyprus, Czech Republic, Denmark, Estonia, Finland, Former Yugoslav Republic of Macedonia, France, Germany, Greece, Hungary, Iceland, Ireland, Italy, Latvia, Lithuania, Luxembourg, Malta, Netherlands, Norway, Poland, Portugal, Romania, Serbia, Slovakia, Slovenia, Spain, Sweden, Switzerland, Turkey and the United Kingdom.

Documents
Document Sharing Hub
Full document details: BS EN 1793-6:2018+A1:2021

Introduction

Noise reducing devices alongside roads should provide adequate sound insulation so that sound transmitted through the device is not significant compared with the sound diffracted over the top. This document specifies a test method for assessing the intrinsic airborne sound insulation performance for noise reducing devices designed for roads in non-reverberant conditions. It can be applied *in situ*, i.e. where the noise reducing devices are installed. The method can be applied without damaging the surface of the noise reducing device.

The method can be used to qualify products to be installed along roads as well as to verify the compliance of installed noise reducing devices to design specifications. Regular application of the method can be used to verify the long term performance of noise reducing devices.

The method requires the averaging of results of measurements taken at different points behind the device under test. The method is able to investigate flat and non-flat products.

The method uses the same principles and equipment for measuring sound reflection (see EN 1793-5) and airborne sound insulation (the present document).

The measurement results of this method for airborne sound insulation are comparable but not identical with the results of the EN 1793-2 method, mainly because the present method uses a directional sound field, while the EN 1793-2 method assumes a diffuse sound field (where all angles of incidence are equally probable). Research studies suggest that good correlation exists between laboratory data, measured according to EN 1793-2 and field data, measured according to the method described in the present document [4], [5], [6], [7], [15].

The test method described in this document should not be used to determine the intrinsic characteristics of airborne sound insulation for noise reducing devices to be installed in reverberant conditions, e.g. inside tunnels or deep trenches or under covers.

For the purpose of this document, reverberant conditions are defined based on the geometric envelope, e, across the road formed by the barriers, trench sides or buildings (the envelope does not include the road surface) as shown by the dashed lines in Figure 1. Conditions are defined as being reverberant when the percentage of open space in the envelope is less than or equal to 25 %, i.e. reverberant conditions occur when $w/e \leq 0{,}25$, where $e = (w+h_1+h_2)$.

This document introduces a specific quantity, called sound insulation index, to define the airborne sound insulation of a noise reducing device. This quantity should not be confused with the sound reduction index used in building acoustics, sometimes also called transmission loss.

NOTE This method can be used to qualify noise reducing devices for other applications, e.g. to be installed nearby industrial sites. In this case, the single-number ratings can preferably be calculated using an appropriate spectrum.

Documents
Document Sharing Hub
Full document details: BS EN 1793-6:2018+A1:2021

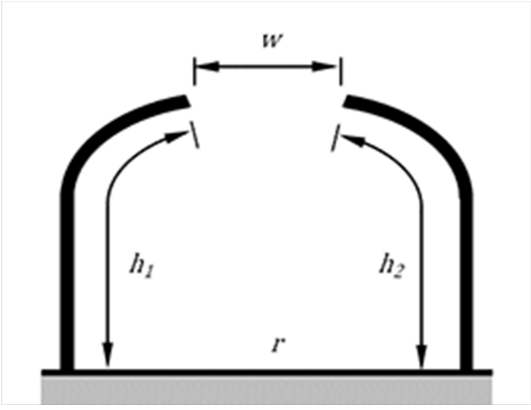

a) Partial cover on both sides of the road; envelope, $e = w+h_1+h_2$

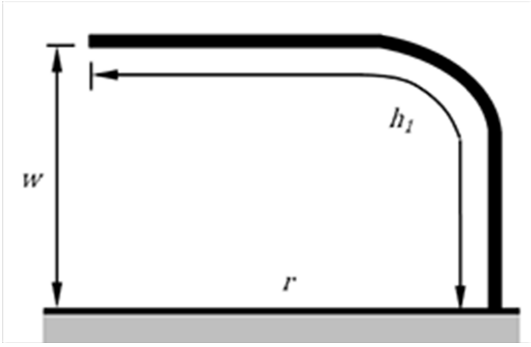

b) Partial cover on one side of the road; envelope, $e = w+h_1$

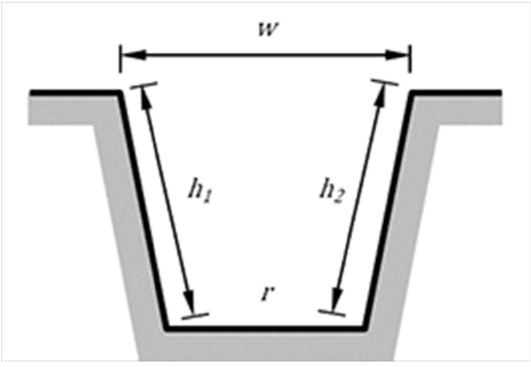

c) Deep trench; envelope, $e = w+h_1+h_2$

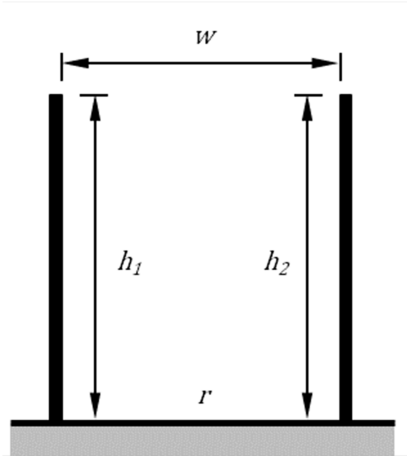

d) Tall barriers or buildings; envelope, $e = w+h_1+h_2$

Key

r road surface

w width of open space

h_1 Developed length of element, e.g. cover, trench side, barrier or building

h_2 Developed length of element, e.g. cover, trench side, barrier or building

NOTE Figure 1 is not to scale.

Figure 1 — Sketch of the reverberant condition check in four cases

Documents
Document Sharing Hub
Full document details: BS EN 1793-6:2018+A1:2021

1 Scope

This document describes a test method for measuring a quantity representative of the intrinsic characteristics of airborne sound insulation for traffic noise reducing devices: the sound insulation index.

The test method is intended for the following applications:

— determination of the intrinsic characteristics of airborne sound insulation of noise reducing devices to be installed along roads, to be measured either *in situ* or in laboratory conditions;

— determination of the *in situ* intrinsic characteristics of airborne sound insulation of noise reducing devices in actual use;

— comparison of design specifications with actual performance data after the completion of the construction work;

— verification of the long term performance of noise reducing devices (with a repeated application of the method);

— interactive design process of new products, including the formulation of installation manuals.

The test method is not intended for the determination of the intrinsic characteristics of airborne sound insulation of noise reducing devices to be installed in reverberant conditions, e.g. inside tunnels or deep trenches or under covers.

Results are expressed as a function of frequency in one-third octave bands, where possible, between 100 Hz and 5 kHz. If it is not possible to get valid measurement results over the whole frequency range indicated, the results will be given in a restricted frequency range and the reasons for the restriction(s) will be clearly reported.

2 Normative references

The following documents are referred to in the text in such a way that some or all of their content constitutes requirements of this document. For dated references, only the edition cited applies. For undated references, the latest edition of the referenced document (including any amendments) applies.

EN 1793-3, *Road traffic noise reducing devices - Test method for determining the acoustic performance – Part 3: Normalized traffic noise spectrum*

EN 61672-1, *Electroacoustics - Sound level meters – Part 1: Specifications (IEC 61672 1)*

ISO/IEC Guide 98-3, *Uncertainty of measurement – Part 3: Guide to the expression of uncertainty in measurement (GUM:1995)*

Documents
Document Sharing Hub
Full document details: BS EN 1793-6:2018+A1:2021

3 Terms and definitions

For the purposes of this document, the following terms and definitions apply.

ISO and IEC maintain terminological databases for use in standardization at the following addresses:

- IEC Electropedia: available at http://www.electropedia.org/
- ISO Online browsing platform: available at http://www.iso.org/obp

3.1
noise reducing device
device that is designed to reduce the propagation of traffic noise away from the road environment

Note 1 to entry: This may be a noise barrier, cladding, a road cover or an added device. These devices may include both acoustic and structural elements.

3.2
acoustical element
element whose primary function is to provide the acoustic performance of the device

3.3
structural element
element whose primary function is to support or hold in place acoustic elements

3.4
sound insulation index
result of airborne sound insulation test described by Formula (1)

3.5
reference height
height h_S equal to half the height, h_B, of the noise reducing device under test: $h_S = h_B/2$ (see Figures 2 and 3)

Note 1 to entry: When the height of the device under test is greater than 4 m and, for practical reasons, it is not advisable to have a height of the source $h_S = h_B/2$, it is possible to have $h_S = 2$ m, accepting the corresponding low frequency limitation (see 4.5.8).

3.6
source reference plane
<for sound insulation index measurements> plane facing the sound source side of the noise reducing device and touching the most protruding parts of the device under test within the tested area (see Figures 2, 4 and 9)

Note 1 to entry: The device under test includes both structural and acoustic elements.

3.7
microphone reference plane
plane facing the receiver side of the noise reducing device and touching the most protruding parts of the device under test within the tested area (see Figures 4 and 9)

Note 1 to entry: The device under test includes both structural and acoustic elements.

Documents
Document Sharing Hub
Full document details: BS EN 1793-6:2018+A1:2021

3.8
source reference position
position facing the side to be exposed to noise when the device is in place, located at the reference height h_S and placed so that its horizontal distance to the source reference plane is $d_S = 1$ m (see Figures 2, 5, 8 and 9)

Note 1 to entry: The actual dimensions of the loudspeaker used for the background research on which this document is based are: 0,40 m x 0,285 m x 0,285 m (length x width x height).

3.9
measurement grid for sound insulation index measurements
vertical measurement grid constituted of nine equally spaced points

Note 1 to entry: A microphone is placed at each point (see Figures 3, 5, 6, 8, 9 and 4.5.4 and 4.5.5).

3.10
barrier thickness
<for sound insulation index measurements> distance t_B between the source reference plane and the microphone reference plane at a height equal to the reference height h_S (see Figures 4, 8 and 9)

3.11
free-field measurement
<for sound insulation index measurements> measurement taken with the loudspeaker and the microphone in an acoustic free field in order to avoid reflections from any nearby object, including the ground (see Figure 6)

3.12
Adrienne temporal window
composite temporal window described in 4.5.6

3.13
background noise
noise coming from sources other than the source emitting the test signal

3.14
signal-to-noise ratio, S/N
difference in decibels between the level of the test signal and the level of the background noise at the moment of detection of the test signal (within the Adrienne temporal window)

3.15
impulse response
time signal at the output of a system when a Dirac function is applied to the input

Note 1 to entry: The Dirac function, also called δ function, is the mathematical idealization of a signal that is infinitely short in time which carries a unit amount of energy.

Documents
Document Sharing Hub
Full document details: BS EN 1793-6:2018+A1:2021

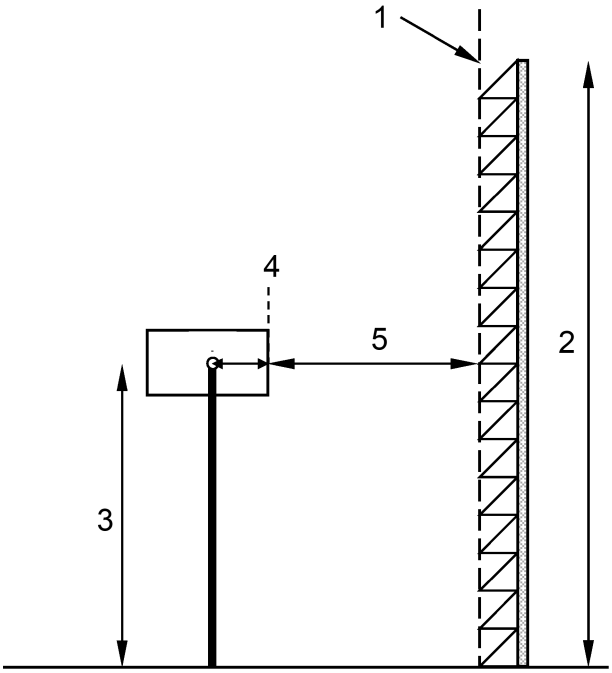

Key

1 source reference plane

2 noise reducing device height, h_B [m]

3 reference height, h_S [m]

4 loudspeaker front panel

5 distance between the loudspeaker front panel and source reference plane, d_S [m]

Figure 2 — Sketch of the loudspeaker-microphone assembly in front of the noise reducing device under test for sound insulation index measurements (not to scale)

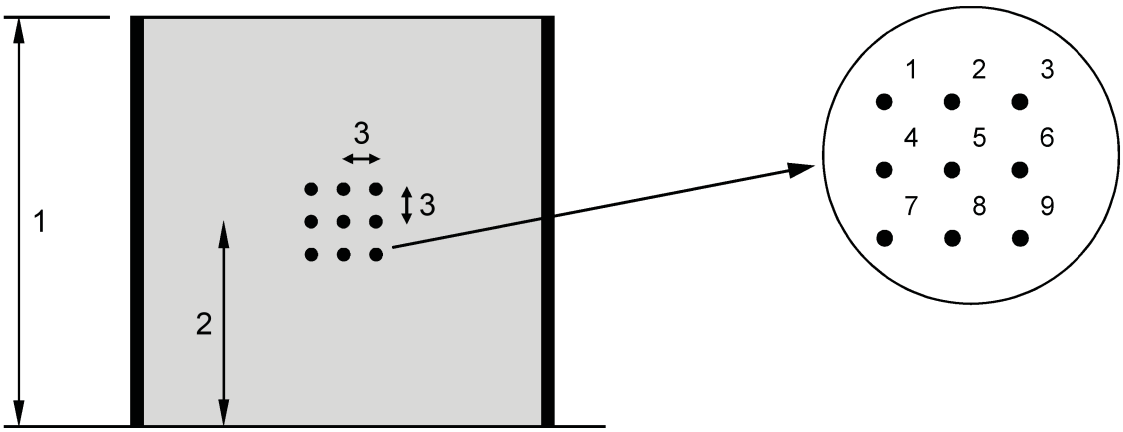

a) Measurement grid for sound insulation index measurements as seen from the receiver (not to scale)

b) Numbering of the measurement points as seen from the receiver (not to scale)

Key

1 noise reducing device height, h_B (m)

2 reference height, h_S (m)

3 orthogonal spacing between two adjacent microphones, s (m)

Figure 3 — Measurement points as seen from the receiver

Documents
Document Sharing Hub
Full document details: BS EN 1793-6:2018+A1:2021

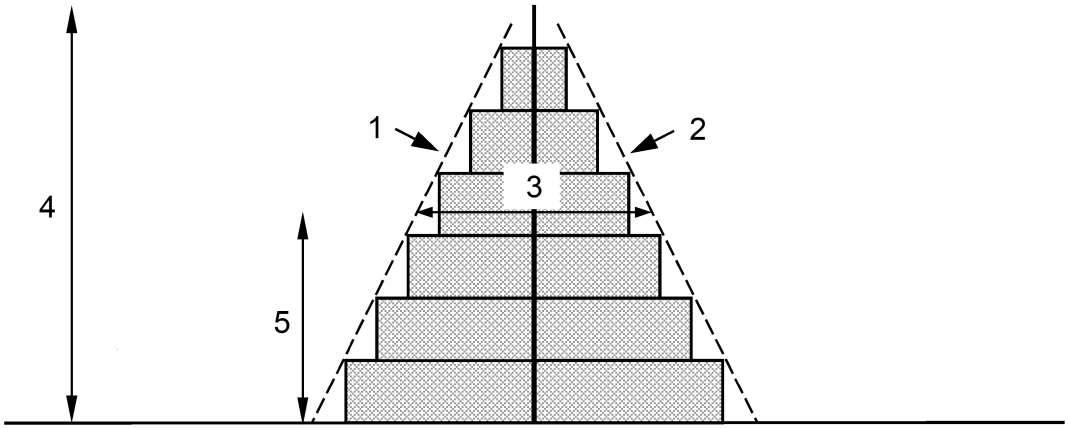

Key

1 sound source reference plane

2 microphone reference plane

3 noise reducing device thickness, t_B, at height h_S [m]

4 noise reducing device height, h_B [m]

5 reference height, h_S [m]

Figure 4— Sound source and microphone reference planes (side view, not to scale)

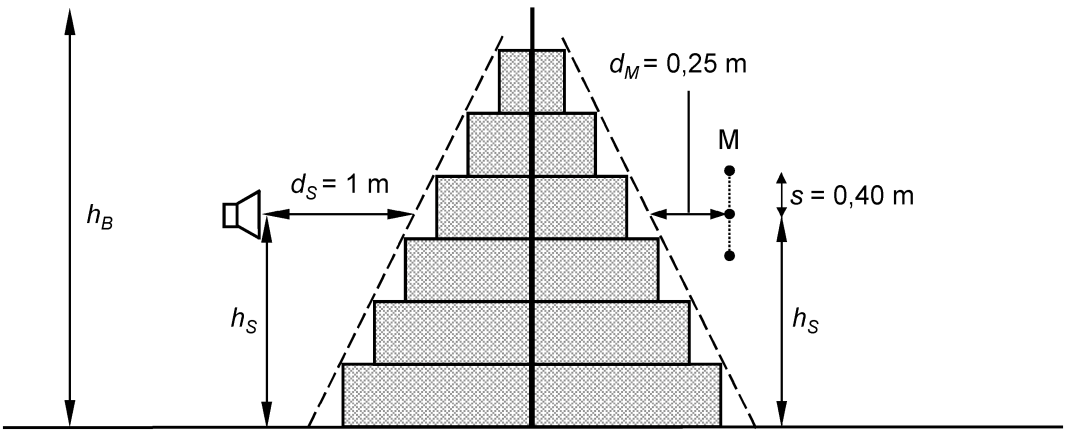

Key

M measurement grid

s distance between two vertical or horizontal microphones in the grid

h_S reference height

h_B noise reducing device height (m)

d_S horizontal distance [loudspeaker - source reference plane] at height h_S

d_M horizontal distance [microphone 5 - microphone reference plane] at height h_S

Figure 5 — Placement of the sound source and measurement grid for sound insulation index measurement (side view, not to scale)

AVA Documents
Document Sharing Hub

Full document details: BS EN 1793-6:2018+A1:2021

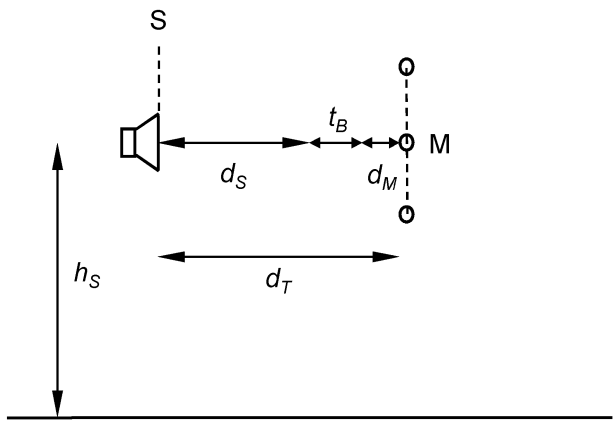

Key

S loudspeaker front panel

M measurement grid

h_S reference height

d_S horizontal distance [loudspeaker - source reference plane] at height h_S

t_B noise reducing device thickness at height h_S

d_M horizontal distance [microphone 5 - microphone reference plane] at height h_S

d_T horizontal distance [loudspeaker – microphone 5] at height h_S

NOTE $d_T = d_S + t_B + d_M$; see Formula (3).

Figure 6 — Sketch of the set-up for the reference "free-field" sound measurement for the determination of the sound insulation index (not to scale)

4 Sound insulation index measurements

4.1 General principle

The sound source emits a transient sound wave that travels toward the device under test and is partly reflected, partly transmitted and partly diffracted by it. The microphone placed on the other side of the device under test receives both the transmitted sound pressure wave travelling from the sound source through the device under test, and the sound pressure wave diffracted by the top edge of the device under test (for the test to be meaningful the diffraction from the lateral edges should be sufficiently delayed). If the measurement is repeated without the device under test between the loudspeaker and the microphone, the direct free-field wave can be acquired. The power spectra of the direct wave and the transmitted wave give the basis for calculating the sound insulation index.

The sound insulation index shall be the logarithmic average of the values measured at nine points placed on the measurement grid (scanning points). See Figure 3 and Formula (1).

The measurement shall take place in a sound field free from reflections within the Adrienne temporal window. For this reason, the acquisition of an impulse response having peaks as sharp as possible is recommended: in this way, the reflections coming from other surfaces can be identified from their delay time and rejected.

4.2 Measured quantity

The expression used to compute the sound insulation index *SI* as a function of frequency, in one-third octave bands, is:

Documents
Document Sharing Hub
Full document details: BS EN 1793-6:2018+A1:2021

$$SI_j = -10 \cdot \lg \left\{ \frac{1}{n} \sum_{k=1}^{n} \frac{\int_{\Delta f_j} \left| F\left[h_{tk}(t) w_{tk}(t) \right] \right|^2 df}{\int_{\Delta f_j} \left| F\left[h_{ik}(t) w_{ik}(t) \right] \right|^2 df} \right\} \quad (1)$$

where

$h_{ik}(t)$ is the incident reference component of the free-field impulse response at the k_{th} scanning point;

$h_{tk}(t)$ is the transmitted component of the impulse response at the kth scanning point;

$w_{ik}(t)$ is the time window (Adrienne temporal window) for the incident reference component of the free-field impulse response at the kth scanning point;

$w_{tk}(t)$ is the time window (Adrienne temporal window) for the transmitted component at the kth scanning point;

F is the symbol of the Fourier transform;

j is the index of the jth one-third octave frequency band (between 100 Hz and 5 kHz);

Δf_i is the width of the jth one-third octave frequency band;

$n = 9$ is the number of scanning points.

4.3 Test arrangement

The test method can be applied both *in situ* and on barriers purposely built to be tested using the method described here. In the second case, the specimen shall be built as follows (see Figure 7):

— a part, composed of acoustic elements;

— a post (if applicable for the specific noise reducing device under test);

— a part, composed of acoustic elements.

The test specimen shall be mounted and assembled in the same manner as the manufactured device is used in practice with the same connections and seals.

The tested area is a circle having a radius of 2 m centred on the middle of the measurement grid. The sample shall be built large enough to completely include this circle for each measurement.

For qualifying the sound insulation index of posts only, it is only necessary to have acoustic elements that extend 2 m or more on either side of the post (see Figure 7).

If the device under test has a post to post distance less than 4 m, the distance between posts should be reduced accordingly but the overall minimum width of the construction should be the same as shown in Figure 7.

Documents
Document Sharing Hub
Full document details: BS EN 1793-6:2018+A1:2021

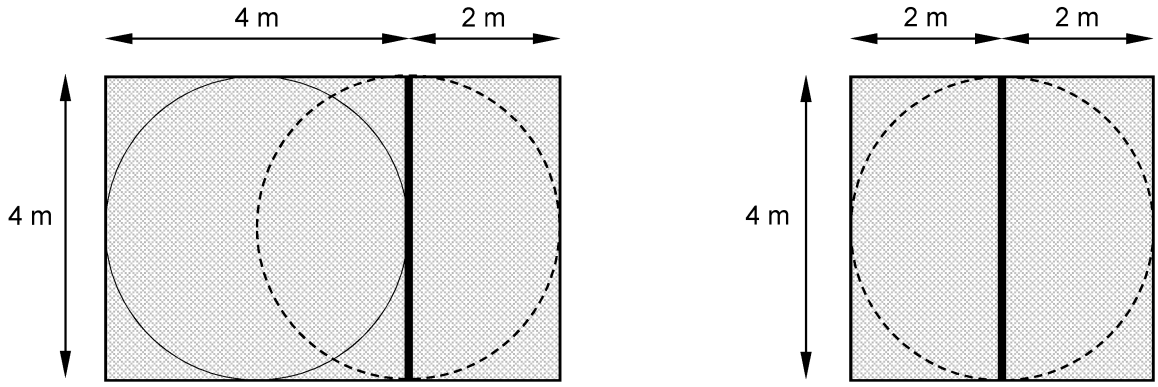

a) Sound insulation index measurements for elements and posts

b) Sound insulation index measurements in front of a post only

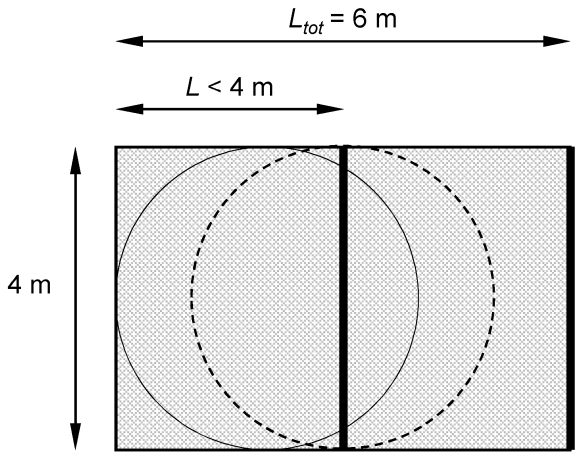

c) Sound insulation index measurements in front of a sample having a post to post distance smaller than 4 m

Key

Thin circles: tested area for elements

Dotted circles: tested area for posts

L actual horizontal length of the acoustic elements having a post to post distance smaller than 4 m

L_{TOT} minimal horizontal length of the sample if the post to post distance is smaller than 4 m

Figure 7 — Sketch of the minimum sample required for measurements in laboratory conditions

Documents
Document Sharing Hub
Full document details: BS EN 1793-6:2018+A1:2021

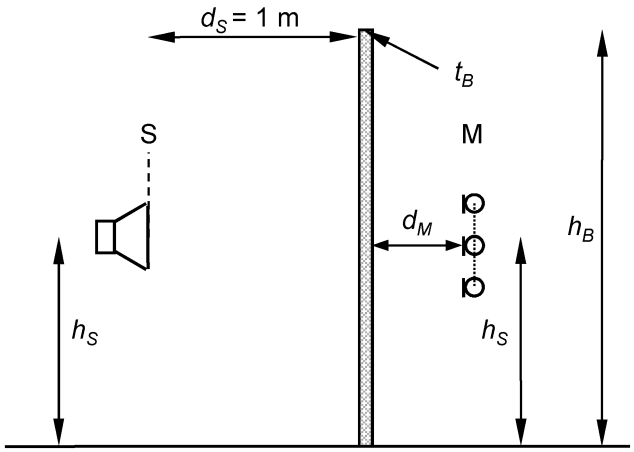

Key

S	loudspeaker front panel	d_S	horizontal distance [loudspeaker - source reference plane] at height h_S
M	measurement grid	t_B	barrier thickness at height h_S
h_S	reference height	d_M	horizontal distance [microphone 5 - microphone reference plane] at height h_S
h_B	barrier height	d_T	horizontal distance [loudspeaker - microphone 5] at height h_S

NOTE $d_T = d_S + t_B + d_M$; see Formula (3).

Figure 8 — Sketch of the set-up for the sound insulation index measurement – Normal incidence of sound on the sample – Transmitted component measurement in front of a flat noise reducing device (not to scale)

Documents
Document Sharing Hub
Full document details: BS EN 1793-6:2018+A1:2021