BS EN 1807-2:2013

BSI Standards Publication

Safety of woodworking machines — Band sawing machines

Part 2: Log sawing machines

bsi.

...making excellence a habit.™

Document Sharing Hub

National foreword

This British Standard is the UK implementation of EN 1807-2:2013. Together with BS EN 1807-1:2013, it supersedes BS EN 1807:1999+A1:2009, which is withdrawn.

The UK participation in its preparation was entrusted to Technical Committee MTE/23, Woodworking machines.

A list of organizations represented on this committee can be obtained on request to its secretary.

This publication does not purport to include all the necessary provisions of a contract. Users are responsible for its correct application.

© The British Standards Institution 2013.
Published by BSI Standards Limited 2013.

ISBN 978 0 580 76811 8

ICS 79.120.10

Compliance with a British Standard cannot confer immunity from legal obligations.

This British Standard was published under the authority of the Standards Policy and Strategy Committee on 30 April 2013.

Amendments issued since publication

Date	Text affected

Documents
Document Sharing Hub

Full document details: BS EN 1807-2:2013

EUROPEAN STANDARD

NORME EUROPÉENNE

EUROPÄISCHE NORM

EN 1807-2

March 2013

ICS 79.120.10

Supersedes EN 1807:1999+A1:2009

English Version

Safety of woodworking machines - Band sawing machines - Part 2: Log sawing machines

Sécurité des machines pour le travail du bois - Machines à scier à ruban - Partie 2: Scies à grumes

Sicherheit von Holzbearbeitungsmaschinen - Bandsägemaschinen - Teil 2: Blockbandsägemaschinen

This European Standard was approved by CEN on 13 January 2013.

CEN members are bound to comply with the CEN/CENELEC Internal Regulations which stipulate the conditions for giving this European Standard the status of a national standard without any alteration. Up-to-date lists and bibliographical references concerning such national standards may be obtained on application to the CEN-CENELEC Management Centre or to any CEN member.

This European Standard exists in three official versions (English, French, German). A version in any other language made by translation under the responsibility of a CEN member into its own language and notified to the CEN-CENELEC Management Centre has the same status as the official versions.

CEN members are the national standards bodies of Austria, Belgium, Bulgaria, Croatia, Cyprus, Czech Republic, Denmark, Estonia, Finland, Former Yugoslav Republic of Macedonia, France, Germany, Greece, Hungary, Iceland, Ireland, Italy, Latvia, Lithuania, Luxembourg, Malta, Netherlands, Norway, Poland, Portugal, Romania, Slovakia, Slovenia, Spain, Sweden, Switzerland, Turkey and United Kingdom.

EUROPEAN COMMITTEE FOR STANDARDIZATION
COMITÉ EUROPÉEN DE NORMALISATION
EUROPÄISCHES KOMITEE FÜR NORMUNG

Management Centre: Avenue Marnix 17, B-1000 Brussels

© 2013 CEN All rights of exploitation in any form and by any means reserved worldwide for CEN national Members.

Ref. No. EN 1807-2:2013: E

Documents
Document Sharing Hub

Full document details: BS EN 1807-2:2013

Contents

Page

Foreword 4

Introduction 5

1 Scope 6

2 Normative references 6

3 Terms, definitions and terminology 8
3.1 Terms and definitions 8
3.2 Terminology 11

4 List of significant hazards 15

5 Safety requirements and/or measures 19
5.1 General 19
5.2 Controls 19
5.2.1 Safety and reliability of control systems 19
5.2.2 Position of controls 20
5.2.3 Starting 21
5.2.4 Normal stopping 22
5.2.5 Emergency stop 22
5.2.6 Tracking mode 23
5.2.7 Mode selection 23
5.2.8 Speed control 24
5.2.9 Control duplication 24
5.2.10 Failure of the power supply 25
5.3 Protection against mechanical hazards 25
5.3.1 Stability 25
5.3.2 Risk of break-up during operation 25
5.3.3 Saw blade holder and saw blade design 27
5.3.4 Braking 32
5.3.5 Devices to minimise the possibility or the effect of ejection 33
5.3.6 Workpiece supports and guides 33
5.3.7 Prevention of access to moving parts 34
5.3.8 Dogging 37
5.4 Protection against non-mechanical hazards 37
5.4.1 Fire 37
5.4.2 Noise 37
5.4.3 Emission of chips and dust 38
5.4.4 Electricity 39
5.4.5 Ergonomics and handling 40
5.4.6 Pneumatics 40
5.4.7 Hydraulics 40
5.4.8 Vibration 41
5.4.9 Electromagnetic compatibility 41
5.4.10 Laser 41
5.4.11 Static electricity 41
5.4.12 Errors of fitting 41
5.4.13 Supply disconnection (Isolation) 41
5.4.14 Maintenance 42

6 Information for use 42
6.1 General 42
6.2 Marking 42

Documents
Document Sharing Hub

Full document details: BS EN 1807-2:2013

6.3 Instruction handbook **43**

Annex A (normative) **Test for adjustable guard over cutting area of saw blade** **47**

Annex B (normative) **Operating conditions for noise emission measurement** **49**
B.1 General **49**
B.2 General data sheet **49**

Annex C (normative) **Impact test method for guards** **52**
C.1 General **52**
C.2 Test method **52**
C.2.1 Preliminary remarks **52**
C.2.2 Testing equipment **52**
C.2.3 Projectile for guards **52**
C.2.4 Sampling **52**
C.2.5 Test procedure **52**
C.3 Results **53**
C.4 Assessment **53**
C.5 Test report **53**
C.6 Test equipment for impact test **53**

Annex D (normative) **Braking tests** **55**
D.1 Conditions for all tests **55**
D.2 Tests **55**
D.2.1 Unbraked run-down time **55**
D.2.2 Run-up time **55**
D.2.3 Braked run-down time **55**

Annex ZA (informative) **Relationship between this European Standard and the Essential Requirements of EU Directive 2006/42/EC** **57**

Bibliography **60**

Documents
Document Sharing Hub

Full document details: BS EN 1807-2:2013

Foreword

This document (EN 1807-2:2013) has been prepared by Technical Committee CEN/TC 142 “Woodworking machines - Safety”, the secretariat of which is held by UNI.

This European Standard shall be given the status of a national standard, either by publication of an identical text or by endorsement, at the latest by September 2013, and conflicting national standards shall be withdrawn at the latest by September 2013.

Attention is drawn to the possibility that some of the elements of this document may be the subject of patent rights. CEN [and/or CENELEC] shall not be held responsible for identifying any or all such patent rights.

This document, together with EN 1807-1:2013, supersedes EN 1807:1999+A1:2009.

This document has been prepared under a mandate given to CEN by the European Commission and the European Free Trade Association, and supports essential requirements of the Machinery Directive 2006/42/EC.

For relationship with EU Directive 2006/42/EC, see informative Annex ZA, which is an integral part of this document.

The following significant technical changes have been made in this new edition:

- for controls, the requirement of Performance Level according to EN ISO 13849-1 instead of categories according to EN 954-1;
- a more complete clause with set of requirements for "Emission of chips and dust";
- requirement for guard-locking on interlocked movable guards to prevent access to moving parts, of type N of EN 1088 when the band saw blade run-down time is maximum 10 s and of type M when the run-down time exceeds 10 s.

EN 1807, *Safety of woodworking machines — Band sawing machines* consists of the following parts:

— *Part 1 Table band saws and band re-saws*;

— *Part 2 Log sawing machines*.

Organisations contributing to the preparation of this European Standard include European Committee of Woodworking Machinery Manufacturers Association "EUMABOIS".

The European Standards produced by CEN/TC 142 are particular to woodworking machines and complement the relevant A and B Standards on the subject of general safety (see Introduction of EN ISO 12100:2010 for a description of A, B and C standards).

According to the CEN/CENELEC Internal Regulations, the national standards organisations of the following countries are bound to implement this European Standard: Austria, Belgium, Bulgaria, Croatia, Cyprus, Czech Republic, Denmark, Estonia, Finland, Former Yugoslav Republic of Macedonia, France, Germany, Greece, Hungary, Iceland, Ireland, Italy, Latvia, Lithuania, Luxembourg, Malta, Netherlands, Norway, Poland, Portugal, Romania, Slovakia, Slovenia, Spain, Sweden, Switzerland, Turkey and the United Kingdom.

Documents
Document Sharing Hub
Full document details: BS EN 1807-2:2013

Introduction

This document has been prepared to be a harmonised standard to provide one means of conforming to the essential safety requirements of the Machinery Directive and associated EFTA regulations. This document is a "type C" standard as defined in EN ISO 12100:2010.

The machinery concerned and the extent to which hazards, hazardous situations and events are covered are indicated in the scope of this document.

When provisions of this type C standard are different from those which are stated in type A or B standards, the provisions of this type C standard take precedence over the provisions of other standards, for machines that have been designed and built according to the provisions of this type C standard.

The requirements of this document are directed to manufacturers and their authorised representatives of log band saws, with and without travelling table, reciprocating carriage, moving head rig or conveyor feed. They are also useful for designers.

This document also includes provisions and examples of information to be provided by the manufacturer to the user.

Documents
Document Sharing Hub
Full document details: BS EN 1807-2:2013

1 Scope

This European Standard deals with all significant hazards, hazardous situations and events as listed in Clause 4 which are relevant to stationary and displaceable log band sawing machines with either manual or automatic loading and/or unloading, hereinafter referred to as “machines”, designed to cut solid wood, when they are used as intended and under the conditions foreseen by the manufacturer, including reasonably foreseeable misuse.

This European Standard does not apply to:

a) table band saws and band re-saws;

NOTE 1 Table band saws and band re-saws are covered by EN 1807-1.

b) specific hazards related to automatic loading and/or unloading;

c) any hazards relating to the combination of a single machine being used with any other machine (as part of a line – e.g. loading and/or unloading automated systems);

d) any hazards arising from any other machining processes (e.g. milling and sawing) related to associated machines or cutting groups, e.g. canters and circular saws.

This European Standard does not deal with the specific hazards related to thermal engine and P.T.O. equipment fitted to the machine.

This European Standard is not applicable to machines manufactured before the date of its publication as EN.

NOTE 2 Machines with manual loading and/or unloading covered by this document are listed under 4 of Annex IV of the Machinery Directive.

2 Normative references

The following documents, in whole or in part, are normatively referenced in this document and are indispensable for its application. For dated references, only the edition cited applies. For undated references, the latest edition of the referenced document (including any amendments) applies.

EN 614-1:2006+A1:2009, *Safety of machinery — Ergonomic design principles — Part 1: Terminology and general principles*

EN 894-1:1997+A1:2008, *Safety of machinery — Ergonomics requirements for the design of displays and control actuators — Part 1: General principles for human interactions with displays and control actuators*

EN 894-2:1997+A1:2008, *Safety of machinery — Ergonomics requirements for the design of displays and control actuators — Part 2: Displays*

EN 894-3:2000+A1:2008, *Safety of machinery — Ergonomics requirements for the design of displays and control actuators — Part 3: Control actuators*

EN 1005-1:2001+A1:2008, *Safety of machinery — Human physical performance — Part 1: Terms and definitions*

EN 1005-2:2003+A1:2008, *Safety of machinery — Human physical performance — Part 2: Manual handling of machinery and component parts of machinery*

EN 1005-3:2002+A1:2008, *Safety of machinery — Human physical performance — Part 3: Recommended force limits for machinery operation*

Documents
Document Sharing Hub
Full document details: BS EN 1807-2:2013

EN 1005-4:2005+A1:2008, *Safety of machinery — Human physical performance — Part 4: Evaluation of working postures and movements in relation to machinery*

EN 1037:1995+A1:2008, *Safety of machinery — Prevention of unexpected start-up*

EN 1088:1995+A2:2008, *Safety of machinery — Interlocking devices associated with guards — Principles for design and selection*

EN 50370-1:2005, *Electromagnetic compatibility (EMC) — Product family standard for machine tools — Part 1: Emission*

EN 50370-2:2003, *Electromagnetic compatibility (EMC) — Product family standard for machine tools — Part 2: Immunity*

EN 60204-1:2006, *Safety of machinery — Electrical equipment of machines — Part 1: General requirements (IEC 60204-1:2005, modified)*

EN 60439-1:1999, *Low voltage switchgear and controlgear assemblies — Part 1: Type-tested and partially type-tested assemblies (IEC 60439-1:1999)*[1)]

EN 60529:1991, *Degrees of protection provided by enclosures (IP Code) (IEC 60529:1989)*[2)]

EN 60825-1:2007, *Safety of laser products — Part 1: Equipment classification and requirements (IEC 60825-1:2007)*

EN 61310-1:2008, *Safety of machinery — Indication, marking and actuation — Part 1: Requirements for visual, acoustic and tactile signals (IEC 61310-1:2007)*

EN 61800-5-2:2007, *Adjustable speed electrical power drive systems — Part 5-2: Safety requirements — Functional (IEC 61800-5-2:2007)*

EN ISO 3743-1:2010, *Acoustics — Determination of sound power levels and sound energy levels of noise sources using sound pressure — Engineering methods for small movable sources in reverberant fields — Part 1: Comparison method for hard-walled test rooms (ISO 3743-1:2010)*

EN ISO 3743-2:2009, *Acoustics — Determination of sound power levels of noise sources using sound pressure — Engineering methods for small, movable sources in reverberant fields — Part 2: Methods for special reverberation test rooms (ISO 3743-2:1994)*

EN ISO 3744:2010, *Acoustics — Determination of sound power levels and sound energy levels of noise sources using sound pressure — Engineering methods for an essentially free field over a reflecting plane (ISO 3744:1994)*

EN ISO 3745:2012, *Acoustics — Determination of sound power levels and sound energy levels of noise sources using sound pressure — Precision methods for anechoic rooms and hemi-anechoic rooms (ISO 3745:2012)*

EN ISO 3746:2010, *Acoustics — Determination of sound power levels and sound energy levels of noise sources using sound pressure — Survey method using an enveloping measurement surface over a reflecting plane (ISO 3746:2010)*

EN ISO 4413:2010, *Hydraulic fluid power — General rules and safety requirements for systems and their components (ISO 4413:2010)*

---

1) This document is impacted by the stand-alone amendment EN 60439-1:1999/A1:2004, *Low-voltage switchgear and controlgear assemblies — Part 1: Type-tested and partially type-tested assemblies (IEC 60439-1:1999/A1:2004)*.

2) This document is impacted by the stand-alone amendment EN 60529:1991/A1:2000, *Degrees of protection provided by enclosures (IP Code) (IEC 60529:1989/A1:2000)*.

Documents
Document Sharing Hub
Full document details: BS EN 1807-2:2013

EN ISO 4414:2010, *Pneumatic fluid power — General rules and safety requirements for systems and their components (ISO 4414:2010)*

EN ISO 4871:2009, *Acoustics — Declaration and verification of noise emission values of machinery and equipment (ISO 4871:1996)*

EN ISO 9614-1:2009, *Acoustics — Determination of sound power levels of noise sources using sound intensity — Part 1: Measurement at discrete points (ISO 9614-1:1993)*

EN ISO 11202:2010, *Acoustics — Noise emitted by machinery and equipment — Determination of emission sound pressure levels at a work station and at other specified positions applying approximate environmental corrections (ISO 11202:2010)*

EN ISO 11204:2010, *Acoustics — Noise emitted by machinery and equipment — Determination of emission sound pressure levels at a work station and at other specified positions applying accurate environmental corrections (ISO 11204:2010)*

EN ISO 11688-1:2009, *Acoustics — Recommended practice for the design of low-noise machinery and equipment — Part 1: Planning (ISO/TR 11688-1:1995)*

EN ISO 12100:2010, *Safety of machinery — General principles for design — Risk assessment and risk reduction (ISO 12100:2010)*

EN ISO 13849-1:2008, *Safety of machinery — Safety-related parts of controls systems — Part 1: General principles for design (ISO 13849-1:2006)*

EN ISO 13850:2008, *Safety of machinery — Emergency stop — Principles for design (ISO 13850:2006)*

EN ISO 13857:2008, *Safety of machinery — Safety distances to prevent hazard zones being reached by the upper and lower limbs (ISO 13857:2008)*

ISO 1940-1:1986, *Mechanical vibration — Balance quality requirements of rigid rotors — Part 1: Determination of permissible residual unbalance*

ISO 7960:1995, *Airborne noise emitted by machine tools — Operating conditions for woodworking machines*

HD 22.4 S4:2004, *Cables of rated voltages up to and including 450/750 V and having cross-linked insulation — Part 4: Cords and flexible cables*

3 Terms, definitions and terminology

3.1 Terms and definitions

For the purposes of this document, the terms and definitions given in EN ISO 12100:2010 and the following apply.

3.1.1
band sawing machine
sawing machine with one or more saw blades in the form of continuous bands each mounted on and running between two or more band wheels

3.1.2
saw blade straining
force exerted on the saw blade to keep it in position on the band wheels during cutting

Note 1 to entry: See Figure 8.

Documents
Document Sharing Hub
Full document details: BS EN 1807-2:2013

3.1.3
saw blade tensioning
process used to form the cross-section of the saw blade, either by rolling or hammering, in order to ensure that the front and back edges of the saw blade grip the band wheels

3.1.4
saw blade tracking
means used to maintain the position of the saw blade on the band wheels

Note 1 to entry: See Figure 9.

3.1.5
dogging
means of securing a log for cutting

3.1.6
log band saw
band sawing machine designed for the primary conversion of logs

3.1.6.1
travelling table log saw
hand fed or power fed log band saw fitted with a travelling table and dogging

Note 1 to entry: See Figure 1.

3.1.6.2
reciprocating carriage log saw
power fed log band saw fitted with a reciprocating carriage and dogging

Note 1 to entry: See Figure 2.

3.1.6.3
conveyor log saw
log band saw fitted with a conveyor as an integrated feed device

Note 1 to entry: See Figure 3.

3.1.6.4
moving head rig log saw (gantry log saw)
log band saw with a moving saw unit

Note 1 to entry: See Figure 4.

3.1.7
manual control
situation where each process movement is initiated by the operator

3.1.8
machine actuator
power mechanism used to effect motion of the machine

3.1.9
hand feed
manual holding and/or guiding of the workpiece, which includes the use of a hand operated carriage on which the workpiece is placed manually or clamped and the use of a demountable power feed unit

AVA Documents
Document Sharing Hub

Full document details: BS EN 1807-2:2013

3.1.10
integrated feed
feed mechanism for the workpiece or band saw blade which is integrated with the machine and where the workpiece or machine element with incorporated band saw blade are held and controlled mechanically during the machining operation

3.1.11
run-up time
elapsed time from the actuation of the start control device until the driven band wheel reaches the intended speed

3.1.12
run-down time
elapsed time from the actuation of the stop control device until driven band wheel standstill

3.1.13
manual loading of power fed machines
where the workpiece is presented by the operator directly to the machine integrated feed, e.g. rotating feed rollers, travelling table or reciprocating carriage; i.e. for which there is no intermediate loading device to receive and transfer the workpiece from the operator to the integrated feed

3.1.14
manual unloading of power fed machines
where the workpiece is removed by the operator directly from the machine outfeed; i.e. for which there is no intermediate unloading device to receive and transfer the workpiece from the machine outfeed to the operator

3.1.15
cutting area
area where the saw blade can be involved in the cutting process

3.1.16
non-cutting area
area where the saw blade is not involved in the cutting process

3.1.17
displaceable machine
machine which is located on the floor, stationary during use and equipped with a device, normally wheels, which allows it to be moved between locations

3.1.18
stationary machine
machine designed to be located on or fixed to the floor or other parts of the structure of the premises and to be stationary during use

3.1.19
PTO-driven machine
displaceable machine designed to be mounted to a moveable work machine, e.g. tractor, and which is powered by PTO

3.1.20
information of the supplier
statements, sales literature, leaflets or other documents, where the manufacturer (or supplier) declares either the characteristics or the compliance of the material or product to a relevant standard

3.1.21
safety function
function of a machine whose failure can result in an immediate increase of the risk(s)

[SOURCE: EN ISO 12100:2010, 3.30]

Documents
Document Sharing Hub
Full document details: BS EN 1807-2:2013

3.1.22
safety-related part of a control system
SRP/CS
part of a control system that responds to safety-related input signals and generates safety-related output signals

[SOURCE: EN ISO 13849-1:2008, 3.1.1]

3.1.23
embedded software
SRESW
firmware
system software
software that is part of the system supplied by the control manufacturer and which is not accessible for modification by the user of the machinery

[SOURCE: EN ISO 13849-1:2008, 3.1.37]

3.1.24
application software
SRASW
software specific to the application, implemented by the machine manufacturer, and generally containing logic sequences, limits and expressions that control the appropriate inputs, outputs, calculations and decisions necessary to meet the SRP/CS requirements

[SOURCE: EN ISO 13849-1:2008, 3.1.36]

Note 1 to entry: Firmware or system software are synonymous with embedded software.

Note 2 to entry: Manufacturer means manufacturer of the system.

Note 3 to entry: For example the operating system of a speed monitoring device.

3.1.25
performance level PL
discrete level used to specify the ability of safety-related parts of control systems to perform a safety function under foreseeable conditions

[SOURCE: EN ISO 13849-1:2008, 3.1.23]

3.1.26
safety programmable logic controller
PLC
programmable logic controller dedicated to safety related application designed in the required PL according to EN ISO 13849-1:2008

3.2 Terminology

The names of the main parts of the machines are shown in Figures 1 to 4 and Tables 1 to 4.

Documents
Document Sharing Hub
Full document details: BS EN 1807-2:2013

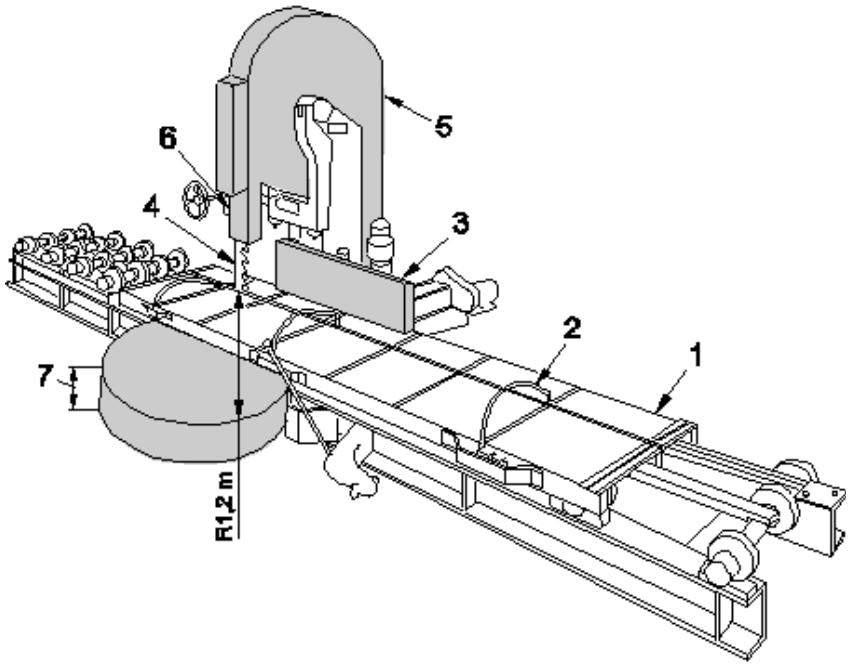

Figure 1 — Example of travelling table log saw

Table 1 — Terminology for travelling table log saw

1	Travelling table
2	Dogging
3	Fence
4	Saw blade
5	Band wheel guards
6	Adjustable guard for saw blade
7	Below travelling table height by not more than 100 mm

Documents
Document Sharing Hub
Full document details: BS EN 1807-2:2013

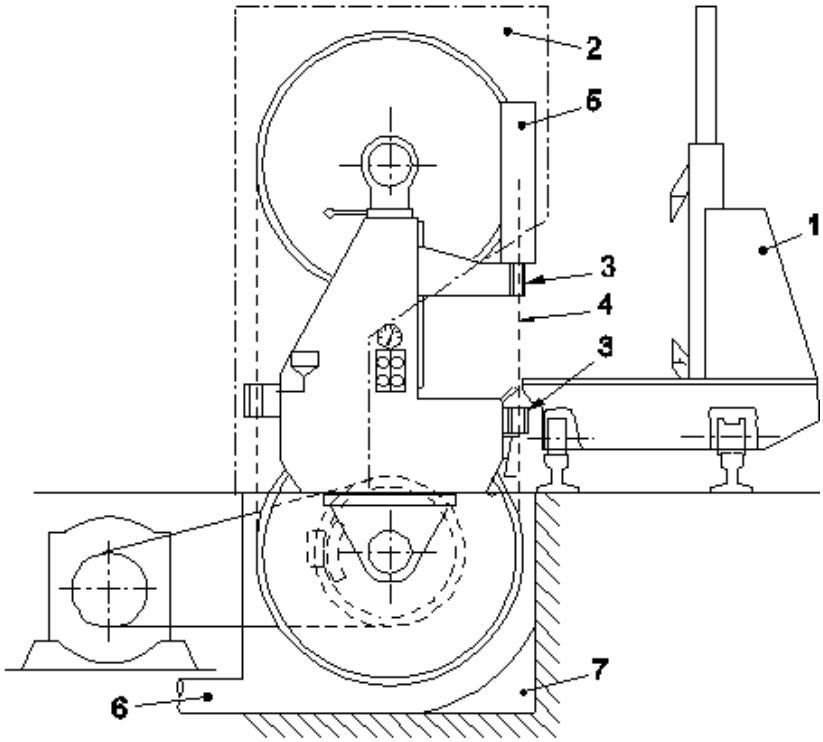

Figure 2 — Example of reciprocating carriage log saw

Table 2 — Terminology for reciprocating carriage log saw

1	Reciprocating log carriage
2	Band wheel guard
3	Saw guides
4.	Saw blade
5	Adjustable guard for saw blade
6	Dust extraction outlet
7	Pit

Documents
Document Sharing Hub
Full document details: BS EN 1807-2:2013

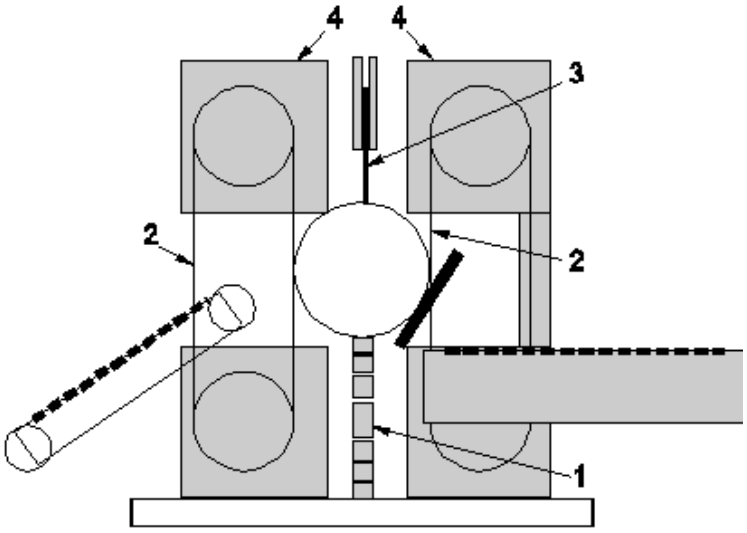

Figure 3 — Example of conveyor fed log saw

Table 3 — Terminology for conveyor fed log saw

1	Conveyor
2	Saw blade
3	Spiked idle roller
4	Band wheel guards

Documents
Document Sharing Hub
Full document details: BS EN 1807-2:2013

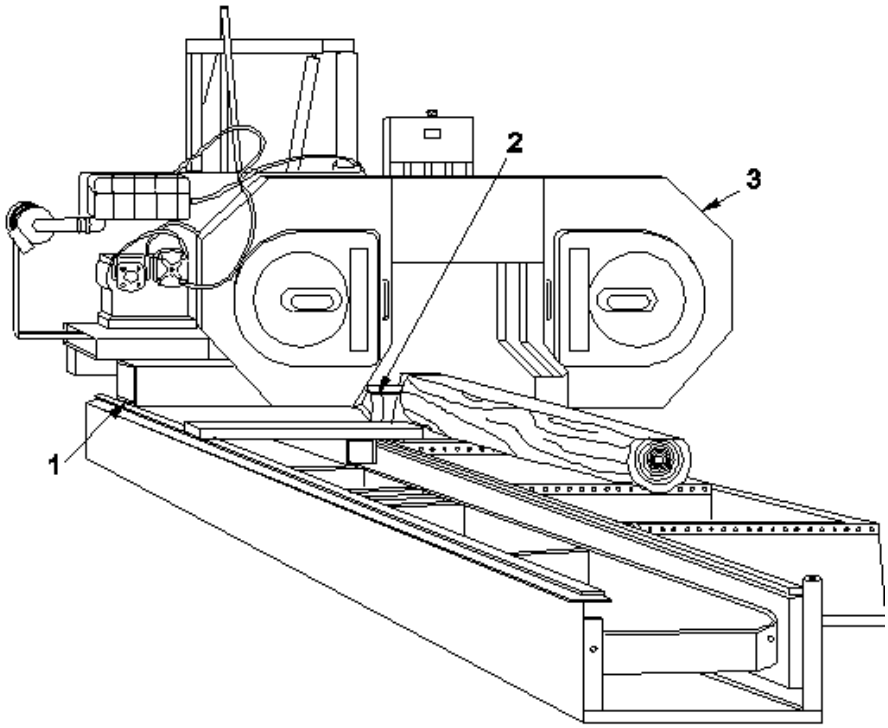

Figure 4 — Example of moving head rig log saw

Table 4 — Terminology for moving head rig log saw

1	Moving head rig
2	Saw blade
3	Band wheel guard

4 List of significant hazards

This clause contains all significant hazards, hazardous situations and events (see EN ISO 12100:2010), identified by risk assessment as significant for the machines as defined in the scope and which require action to eliminate or reduce the risk. This document deals with these significant hazards by defining safety requirements and/or measures or by reference to relevant standards.

These hazards are listed in Table 5.

Documents
Document Sharing Hub
Full document details: BS EN 1807-2:2013

Table 5 — List of significant hazards – Log band sawing machines

No	Hazards, hazardous situations and hazardous events	EN ISO 12100:2010	Relevant sub-clause of this document
1	**Mechanical hazards** related to: - machine parts or workpieces:		
	a) shape;	6.2.2.1, 6.2.2.2, 6.3	5.3.2, 5.3.7.1, 5.3.7.3, 5.3.8, 5.4.3, 5.4.12
	b) relative location;		5.2.2, 5.3.3, 5.3.7, 5.3.8, 5.4.5, 5.4.10, 5.4.14
	c) mass and stability (potential energy of elements which may move under the effect of gravity);		5.2.5, 5.2.10, 5.3.3, 5.4.5, 5.4.14
	d) mass and velocity (kinetic energy of elements in controlled or uncontrolled motion);		5.2.3, 5.2.4, 5.2.8, 5.3.4, 5.3.7, 5.4.5
	e) mechanical strength;		5.3.2, 5.3.4, Annex A, Annex C
	accumulation of energy inside the machinery:		
	f) liquids and gases under pressure;	6.2.10, 6.3.5.4	5.4.6, 5.4.7
1.1	Crushing hazard		5.2.3, 5.2.4, 5.2.5, 5.2.7, 5.2.8, 5.2.9, 5.3.4, 5.3.6, 5.3.7, 5.3.8, 5.4.14, 6.3
1.2	Shearing hazard		5.2.3, 5.2.4, 5.2.5, 5.2.7, 5.2.8, 5.2.9, 5.3.4, 5.3.6, 5.3.7, 5.3.8, 5.4.14, 6.3
1.3	Cutting or severing hazard		5.2.3, 5.2.4, 5.2.5, 5.2.7, 5.2.8, 5.2.9, 5.3.4, 5.3.6, 5.3.7, 5.3.8, 5.4.14, 6.3

Documents
Document Sharing Hub
Full document details: BS EN 1807-2:2013

1.4	Entanglement hazard		5.2.3, 5.2.4, 5.2.5, 5.2.7, 5.2.8, 5.2.9, 5.3.4, 5.3.6, 5.3.7, 5.3.8, 5.4.14, 6.3
1.5	Drawing-in or trapping hazard		5.2.3, 5.2.4, 5.2.5, 5.2.7, 5.2.8, 5.2.9, 5.3.4, 5.3.6, 5.3.7, 5.3.8, 5.4.14, 6.3
1.6	Impact hazard		5.2.3, 5.2.4, 5.2.5, 5.2.7, 5.2.8, 5.2.9, 5.3.4, 5.3.6, 5.3.7, 5.4.14, 6.3
1.8	Friction or abrasion hazard		5.2.3, 5.2.4, 5.2.7, 5.2.9, 5.3.4, 5.3.7, 5.3.8, 5.4.14, 6.3
1.9	High pressure fluid injection or ejection hazard		5.4.6, 5.4.7
2	**Electrical hazards** due to:		
2.1	Contact of persons with live parts (direct contact)	6.2.9, 6.3.5.4	5.4.4, 5.4.13
2.2	Contact of persons with parts which have become live under faulty conditions (indirect contact)	6.2.9	5.4.4, 5.4.13
2.4	Electrostatic phenomena	6.2.9	5.4.11
4	**Hazards generated by noise**, resulting in:		
4.1	Hearing loss (deafness), other physiological disorders (loss of balance, loss of awareness)	6.2.2.2, 6.3	5.4.2, Annex B
4.2	Interference with speech communication, acoustic signals		6.3
6	**Hazards generated by radiation**		
6.5	Lasers	6.3.4.5	5.4.10, 6.3

AVA Documents
Document Sharing Hub

Full document details: BS EN 1807-2:2013

7	**Hazards generated by materials and substances** (and their constituent elements) processed or used by the machinery		
7.1	Hazards from contact with or inhalation of harmful fluids and dusts	6.2.3, 6.2.4	5.4.3, 6.3
7.2	Fire hazard	6.2.4	5.4.1
8	**Hazards generated by neglecting ergonomic principles in machinery design** related to:		
8.1	Unhealthy postures or excessive effort	6.2.7, 6.2.8, 6.2.11.12, 6.3.5.5, 6.3.5.6	5.2.2, 5.4.5
8.2	Hand-arm or foot-leg anatomy	6.2.8.3	5.4.5
8.4	Local lighting	6.2.8.6	6.3
8.5	Mental overload and underload, stress	6.2.8.5	6.3
8.6	Human error, human behaviour	6.2.8, 6.2.11.8, 6.2.11.10, 6.3.5.2, 6.4	6.3
8.7	Design, location or identification of manual controls	6.2.8.f, 6.2.11.8	5.2.2, 5.4.5
8.8	Design or location of visual display units	6.2.8, 6.4.2	5.2.2, 5.4.5
9	**Unexpected start up, unexpected overrun/overspeed** (or any similar malfunction) from:		
9.1	Failure/disorder of the control system	6.2.11, 6.3.5.4	5.2.1, 5.2.11, 5.4.13
9.2	Restoration of energy supply after an interruption	6.2.11.4	5.2.10, 5.4.6, 5.4.7
9.3	External influences on electrical equipment	6.2.11.11	5.4.9
9.5	Errors in the software	6.2.11.7	5.2.1.3
9.6	Errors made by the operator (due to mismatch of machinery with human characteristics and abilities, see 8.6)	6.2.8, 6.2.11.8, 6.2.11.10, 6.3.5.2, 6.4	5.4.5, 6.3
10	**Impossibility of stopping the machine in the best possible conditions**	6.2.11.1, 6.2.11.3, 6.3.5.2	5.2.4, 5.2.5, 5.2.7, 5.4.13
11	**Variations in the rotational speed of tools**	6.2.2.2, 6.2.3	5.2.8
12	**Failure of the power supply**	6.2.11.1, 6.2.11.4	5.2.10
13	**Failure of the control circuit**	6.2.11, 6.3.5.4	5.2.11

Documents
Document Sharing Hub
Full document details: BS EN 1807-2:2013